SMD transformers for automotive grade
Transformers for IGBT/FET

VGT series

FEATURES

- A power transformer for the IPM drive of the motor inverter.
- High flux density cores have been adopted to achieve miniaturization.
- The dielectric strength voltage is 2.6 kV.
- Operating temperature range: –40 to +130°C (including self-temperature rise)

APPLICATION

- For Intelligent Power Module drive power supply of an inverter motor

PART NUMBER CONSTRUCTION

VGT	10SEE	-	200	S2A5
Series name	Core shape		Internal code	Type name

PRODUCT LINEUP

	Inductance* NP (μH)	Tolerance	Leakage inductance* NP(NS all shorted) (μH)max.	Withstanding voltage NP, NF-NS Sense: 1mA	Coil-Core Sense: 1mA	Turn ratio
VGT10SEE-200S2A5 **13.3x17.9x10.8(mm)max.** 	20	±25%	0.5	2.6kVrms/1min	1.3kVrms/1min	NP:NF:NS1:NS2 =1:1:1:1
VGT12EEM-200S1A4 **13.9x15.3x10.0(mm)max.** 	10	±20%	0.2	2.6kVrms/1min	1.3kVrms/1min	NP:NF:NS =1:1.6:2.9
VGT15EFD-200S3A6 **20.3x24.5x10.2(mm)max.** 	8.0	±20%	0.2	2.6kVrms/1min	1.3kVrms/1min	NP:NF:NS1:NS2:NS3 =1:2.8:2.8:2.8:2.8
VGT15SEFD-200S1A4 **15.9x19.9x10.0(mm)max.** 	10	±20%	0.2	2.6kVrms/1min	1.3kVrms/1min	NP:NF:NS =1:1.8:3.3
VGT15SEFD-250S4A7 **23.3x22.4x12.0(mm)max.** 	2.6	±20%	0.2	2.6kVrms/1min	1.3kVrms/1min	NP:NF:NS1:NS2:NS3:NS4 =1:3:3:3:3:3
VGT22EPC-200S6A12 **33.5x27.8x13.7(mm)max.** 	2.5	±15%	0.3	2.6kVrms/1min	1.3kVrms/1min	NP:NS1-P:NS1-N:NS2-P:NS2-N: NS3-P:NS3-N:NS4-P:NS4-N =1:1.2:0.7:1.2:0.7:1.2:0.7:1.2:0.7

* Measuring conditions: 100kHz/1V

VGT10SEE-200S2A5

■ELECTRICAL CHARACTERISTICS

□CHARACTERISTICS SPECIFICATION TABLE

Part No.	Inductance* NP (μH)	Tolerance	Leakage inductance* NP(NS all shorted) (μH)max.	Withstanding voltage NP, NF-NS Sense: 1mA	Coil-Core Sense: 1mA	Turn ratio
VGT10SEE-200S2A5	20	±25%	0.5	2.6kVrms/1min	1.3kVrms/1min	NP:NF:NS1:NS2 =1:1:1:1

■SHAPE & DIMENSIONS

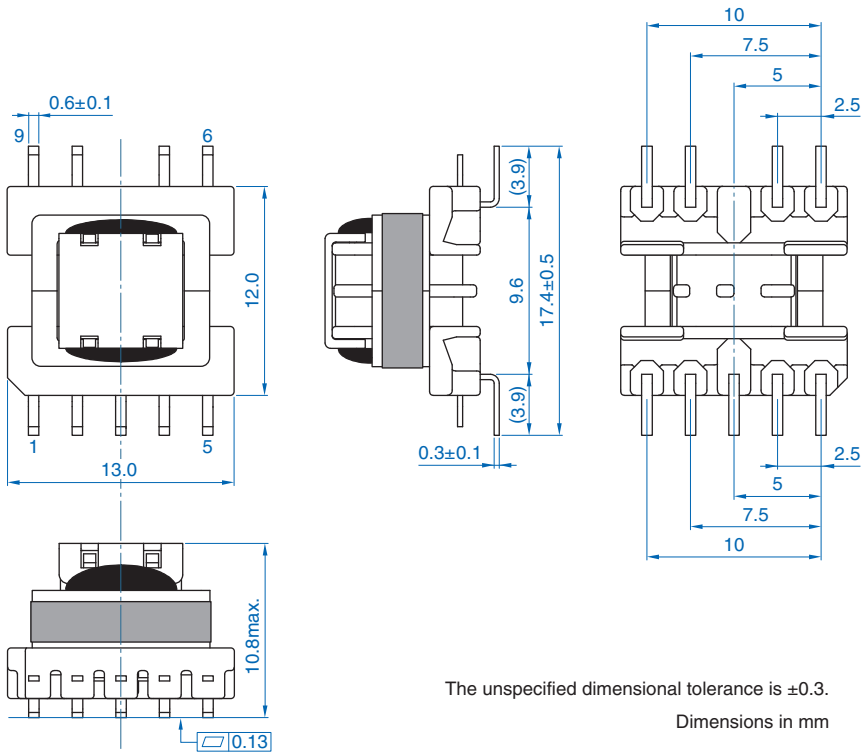

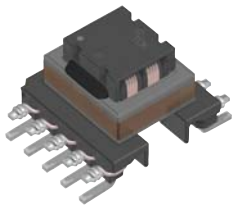

The unspecified dimensional tolerance is ±0.3.

Dimensions in mm

■RECOMMENDED LAND PATTERN

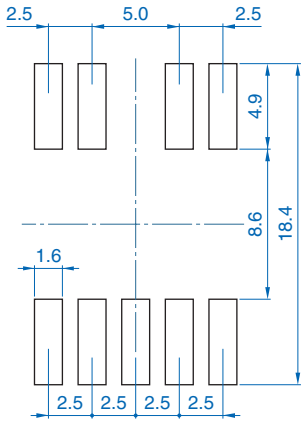

Dimensions in mm

■CIRCUIT DIAGRAM

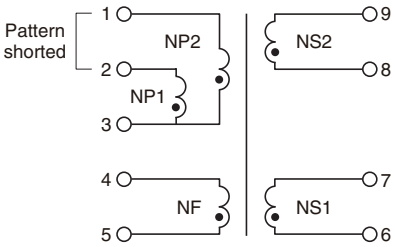

VGT12EEM-200S1A4

■ELECTRICAL CHARACTERISTICS

□CHARACTERISTICS SPECIFICATION TABLE

Part No.	Inductance* NP (μH)	Tolerance	Leakage inductance* NP(NS all shorted) (μH)max.	Withstanding voltage NP, NF-NS Sense: 1mA	Coil-Core Sense: 1mA	Turn ratio
VGT12EEM-200S1A4	10	±20%	0.2	2.6kVrms/1min	1.3kVrms/1min	NP:NF:NS =1:1.6:2.9

■SHAPE & DIMENSIONS

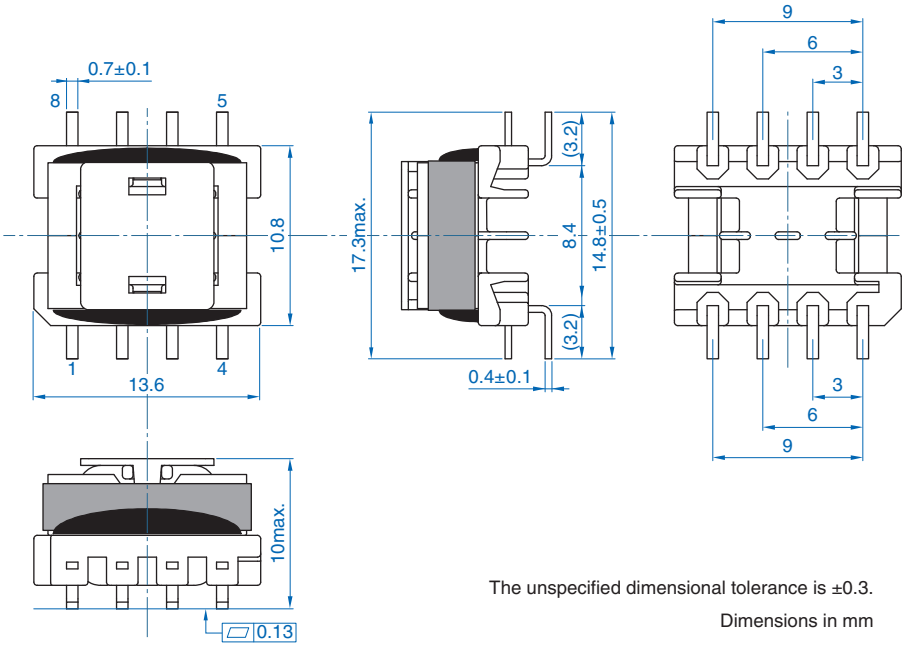

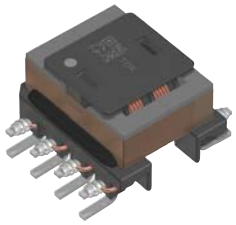

The unspecified dimensional tolerance is ±0.3.

Dimensions in mm

■RECOMMENDED LAND PATTERN

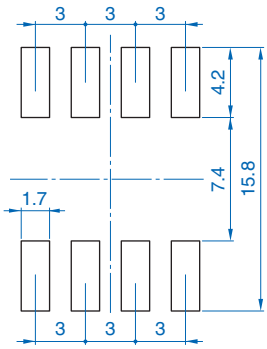

Dimensions in mm

■CIRCUIT DIAGRAM

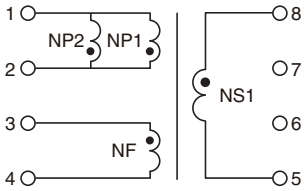

VGT15EFD-200S3A6

■ELECTRICAL CHARACTERISTICS

□CHARACTERISTICS SPECIFICATION TABLE

Part No.	Inductance* NP (μH)	Tolerance	Leakage inductance* NP(NS all shorted) (μH)max.	Withstanding voltage NP, NF-NS Sense: 1mA	Coil-Core Sense: 1mA	Turn ratio
VGT15EFD-200S3A6	8.0	±20%	0.2	2.6kVrms/1min	1.3kVrms/1min	NP:NF:NS1:NS2:NS3 =1:2.8:2.8:2.8:2.8

■SHAPE & DIMENSIONS

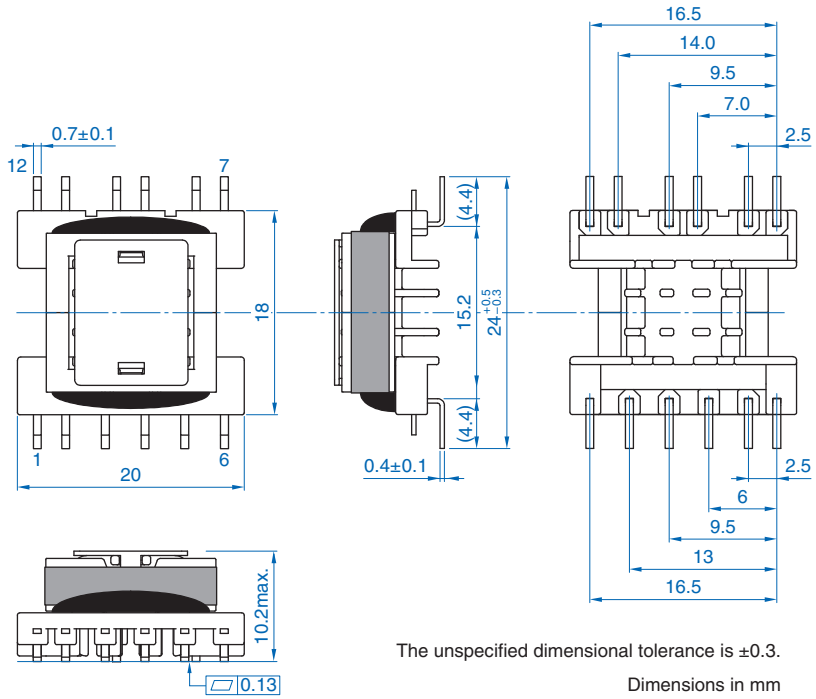

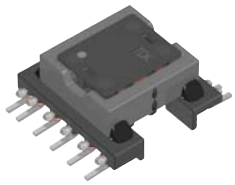

The unspecified dimensional tolerance is ±0.3.

Dimensions in mm

■RECOMMENDED LAND PATTERN

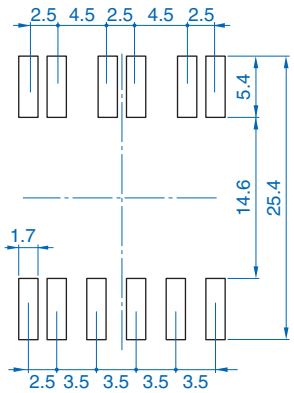

Dimensions in mm

■CIRCUIT DIAGRAM

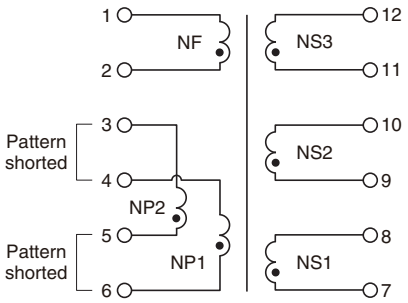

VGT15SEFD-200S1A4

■ELECTRICAL CHARACTERISTICS

□CHARACTERISTICS SPECIFICATION TABLE

Part No.	Inductance* NP (μH)	Tolerance	Leakage inductance* NP(NS all shorted) (μH)max.	Withstanding voltage NP, NF-NS Sense: 1mA	Coil-Core Sense: 1mA	Turn ratio
VGT15SEFD-200S1A4	10	±20%	0.2	2.6kVrms/1min	1.3kVrms/1min	NP:NF:NS =1:1.8:3.3

■SHAPE & DIMENSIONS

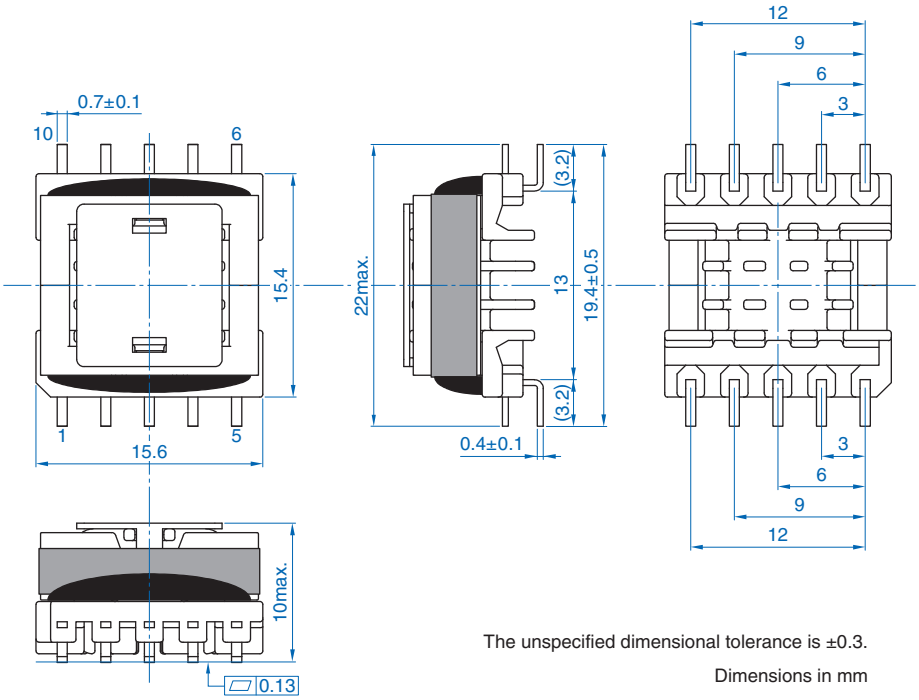

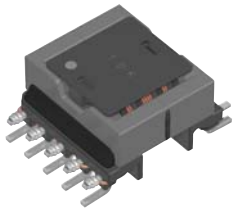

The unspecified dimensional tolerance is ±0.3.

Dimensions in mm

■RECOMMENDED LAND PATTERN

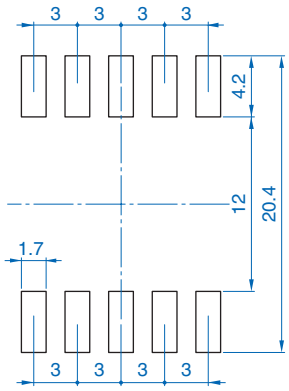

Dimensions in mm

■CIRCUIT DIAGRAM

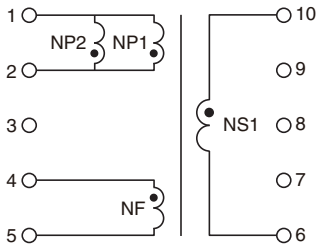

VGT15SEFD-250S4A7

■ELECTRICAL CHARACTERISTICS

□CHARACTERISTICS SPECIFICATION TABLE

Part No.	Inductance* NP (μH)	Tolerance	Leakage inductance* NP(NS all shorted) (μH)max.	Withstanding voltage NP, NF-NS Sense: 1mA	Coil-Core Sense: 1mA	Turn ratio
VGT15SEFD-250S4A7	2.6	±20%	0.2	2.6kVrms/1min	1.3kVrms/1min	NP:NF:NS1:NS2:NS3:NS4 =1:3:3:3:3:3

■SHAPE & DIMENSIONS

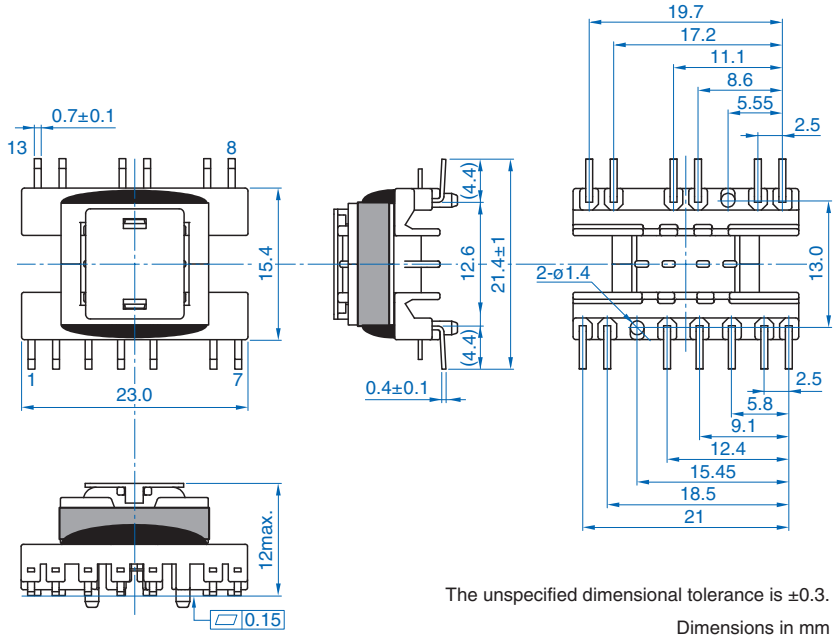

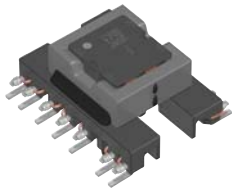

The unspecified dimensional tolerance is ±0.3.

Dimensions in mm

■RECOMMENDED LAND PATTERN

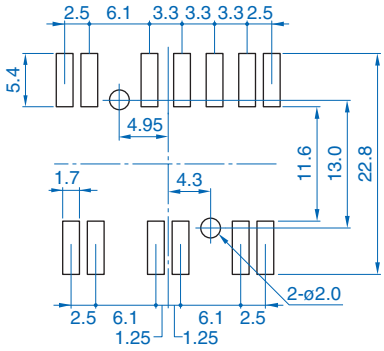

Dimensions in mm

■CIRCUIT DIAGRAM

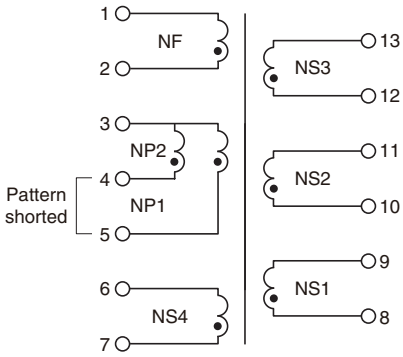

VGT22EPC-200S6A12

■ELECTRICAL CHARACTERISTICS

□CHARACTERISTICS SPECIFICATION TABLE

Part No.	Inductance* NP (μH)	Tolerance	Leakage inductance* NP(NS all shorted) (μH)max.	Withstanding voltage NP, NF-NS Sense: 1mA	Coil-Core Sense: 1mA	Turn ratio
VGT22EPC-200S6A12	2.5	±15%	0.3	2.6kVrms/1min	1.3kVrms/1min	NP:NS1-P:NS1-N:NS2-P:NS2-N: NS3-P:NS3-N:NS4-P:NS4-N =1:1.2:0.7:1.2:0.7:1.2:0.7:1.2:0.7

■SHAPE & DIMENSIONS

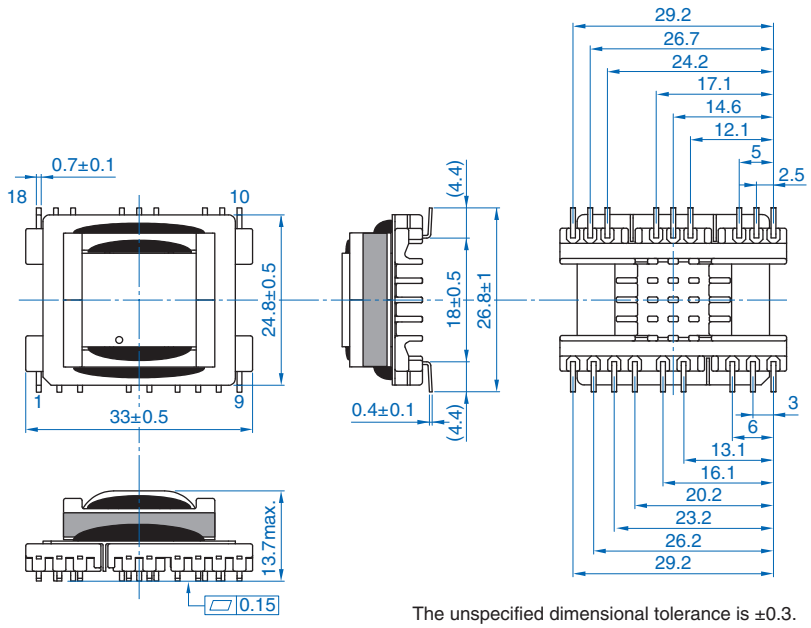

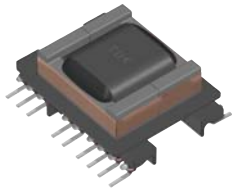

The unspecified dimensional tolerance is ±0.3.

Dimensions in mm

■RECOMMENDED LAND PATTERN

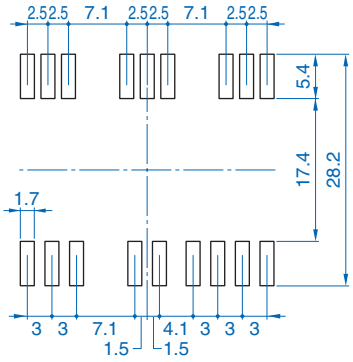

Dimensions in mm

■CIRCUIT DIAGRAM

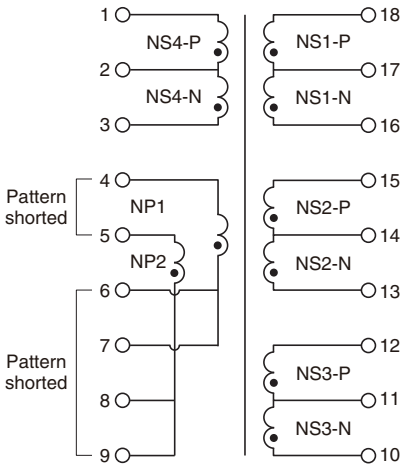

VGT series

RECOMMENDED REFLOW PROFILE

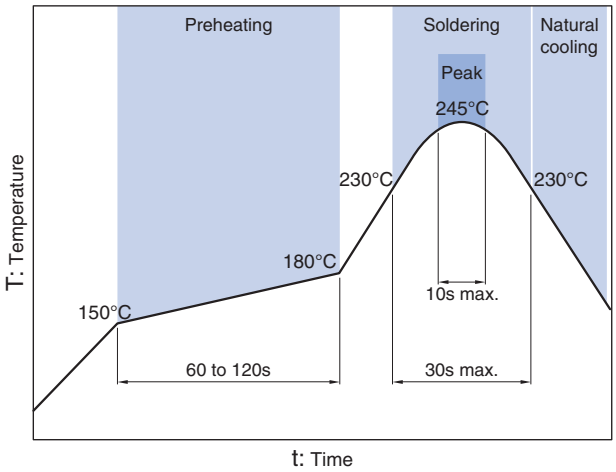

*When mounting the product, use our recommended reflow profile described above.

TEMPERATURE RANGE, INDIVIDUAL WEIGHT

Part No.	Temperature range		Individual weight
	Operating temperature* (°C)	Storage temperature** (°C)	(g)
VGT10SEE-200S2A5	–40 to +130	–40 to +130	1.9
VGT12EEM-200S1A4	–40 to +130	–40 to +130	1.9
VGT15EFD-200S3A6	–40 to +130	–40 to +130	4.1
VGT15SEFD-200S1A4	–40 to +130	–40 to +130	3.9
VGT15SEFD-250S4A7	–40 to +130	–40 to +130	4.6
VGT22EPC-200S6A12	–40 to +130	–40 to +130	10.8

* Operating temperature range includes self-temperature rise.
** The storage temperature range is for after the assembly.

PACKAGING STYLE

□REEL DIMENSIONS, PACKAGE QUANTITY

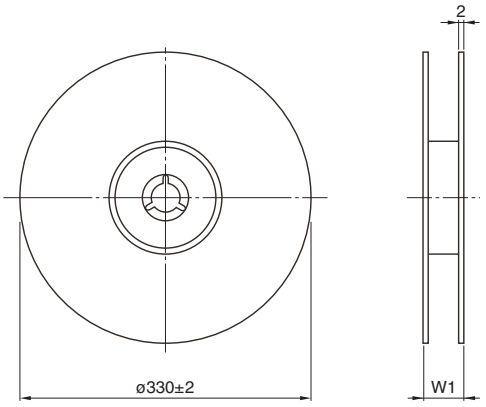

Dimensions in mm

Part No.	W1	Package quantity (pcs/reel)	Package quantity (pcs/box)
VGT10SEE-200S2A5	36.9	250	500
VGT12EEM-200S1A4	36.9	250	500
VGT15EFD-200S3A6	48.2	180	360
VGT15SEFD-200S1A4	48.2	200	400
VGT15SEFD-250S4A7	48.2	150	300
VGT22EPC-200S6A12	48.2	60	120

・These values are typical values.

□TAPE DIMENSIONS

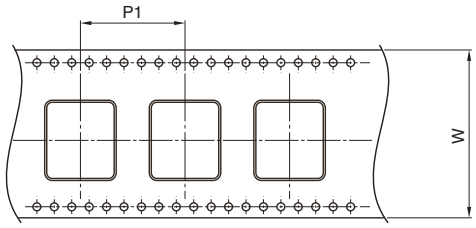

Dimensions in mm

Part No.	P1	W
VGT10SEE-200S2A5	20±0.1	32±0.3
VGT12EEM-200S1A4	20±0.1	32±0.3
VGT15EFD-200S3A6	28±0.1	44±0.3
VGT15SEFD-200S1A4	24±0.1	44±0.3
VGT15SEFD-250S4A7	28±0.1	44±0.3
VGT22EPC-200S6A12	44±0.15	44±0.3

Attentions for use

Please read this specifications before using this product by all means.

Attentions for safety

For use of this product, please carefully read this caution and design the application safely.

⚠ Attention on designing

- On designing a PCB layout, please refer to the land pattern of this catalogue.
- As leakage magnetics flux generates, please pay attention to the affection by the flux.
  It may be concerned as the cause of a malfunction.

⚠ Attention on handling

- Please do not use a product which was dropped.
  It may be concerned as the cause of a malfunction.
- Since the top of the soldered pins are sharpened, please handle with care.
- When keeping the products, please avoid any dust, mist, water and sunlight .
  It may be concerned as the cause of a malfunction.
- In the environment which is exposed by any gas corrosion, i.e. natrium, acid and alkaline atmosphere, please do not use or store.
- When assembling, do not apply excess stress to the product by metal base tool.
  It may be concerned as the cause of a malfunction.

⚠ Attention

- This product's structure and number of turns (magnetic design) are designed by consideration of the condition of power voltage and circuit drive (drive frequency and Max. on-duty).
  Do not operate under the out of the range of the designed condition.
  It may be any causes of a damage or a burnout.
- The range of the operating temperature and humidity, by its consideration of the characteristics of component parts and its self temperature rise.
  Do not exceed this range for the operation.
  It may be any causes of damage or burnout.
- Do not use this product under the condition which is possible contamination of any dust or wrong parts.
  It may be any causes of burnout.
- The products listed in this specification are intended for use of any general electronic equipment and transportation equipment (AV equipment, telecommunication applicants, home appliances, amusement equipment, computers, mobile equipment, office machines, measurement equipment, industrial robots, cars, electric trains, ships and etc.) under a normal operation and condition.
- This is not a product which warrants any quality, compatibility or performance to the following uses (hereafter called Special cases of uses) which malfunction, error or defect in those appliances which are required high level of safeness or reliability, may cause the enormous social impact or the risk to human life, heath of body, assets or else.
- About any damages which are caused by an use which is out of range or beyond the conditions of our specification, or an use in these special cases below, we are not able to take any responsibilities of the damages.
- If your purpose of this product will be an use beyond the scope or conditions of this specification, or for special cases listed below, please contact with one of our contact windows, in advance.
- In order to meet with an application of our customer, we would like to discuss its specification which will be different to this specification.

<<Special cases of use for>>

(1) Aerospace/Aviation
(2) Medical
(3) Power-generation control
(4) Nuclear power generation
(5) Equipment on the sea bed
(6) Transportation control
(7) Public information-processing
(8) Military
(9) Electric heating, burning equipment
(10) Disaster prevention/crime prevention equipment
(11) Safety equipment
(12) Other applications that are not considered as general purpose applications

When designing your equipment even for general-purpose applications, you are kindly requested to take into consideration securing protection circuit/device or providing backup circuits in your equipment.