Working Together for
a Greener Society

Future of Power Electronics and the Earth

Selection Guide of LED Driver

All information in this guide is as of the date of publication. Please make sure that you are using the latest version of the guide.
If you need more product information, please refer to our data sheets.
https://www.sanken-ele.co.jp/en

Contents

LED Driver Overview

Back to Contents

Downsized PCB

Spot light

MR16

LED bulb

High Power and Smart Lighting

Down light

LED fluorescent lamp

Ceiling light

Street light

DC/DC

LC5700 Series

SOP8

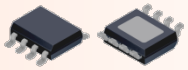

HSOP8

Isolated Flyback Convertor

- No PFC Circuit Required
- High Power Factor in Light Load (Class-C)

DIP8

LC5546AD, LC5546LD
(Internal Power MOSFET)

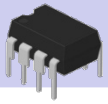

Non-isolated and Buck-boost Convertor

- Low Component Count
- High Power Factor
- High Power Factor (Class-C)

LC5566LD (Internal Power MOSFET)

DIP8

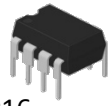

LC5581AS, LC5581LS (Controller)

VSOP16

High Power and Smart Application

PFC IC: SSC2016S (CRM Type)

Main Converter: LLC Type

DC/DC LED Driver IC

LC57xx (1ch)
Internal Power MOSFET

LC101N (1ch)
Balancer

Products offers to meet various needs such as various form and loads of the lamp.

Off-line Buck Type (Low Power Application)

Back to Contents

Buck-boost Converter

LC5566LD
(Internal Power MOSFET)
→P.10

DIP8

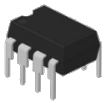

LC5581AS/LC5581LS
(Controller)
→P.11

VSOP16

- ✓ LED Bulb
- ✓ Down Light
- ✓ LED Fluorescent Lamp

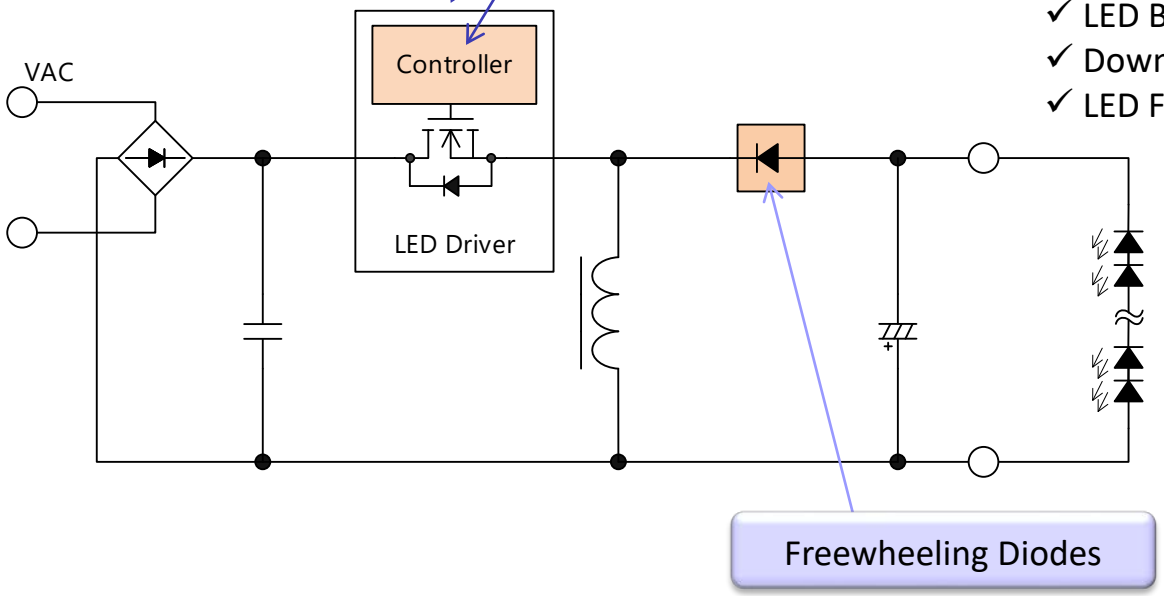

Note:
Refer to the selection guide of diode about peripheral diodes.

Off-line Flyback Type (Low to Middle Power Application)

Back to Contents

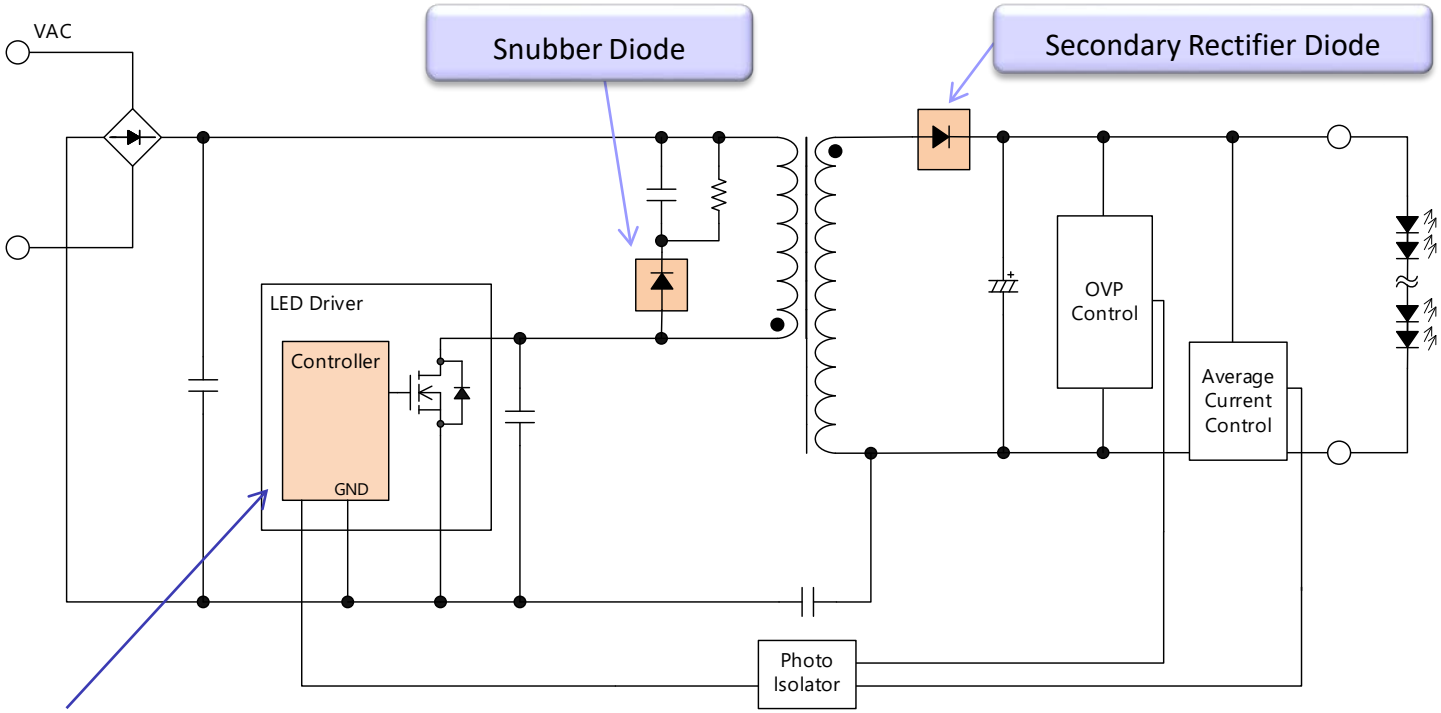

LED Driver

DIP8

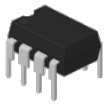

LC5546AD, LC5546LD (Non-isolated, Internal Power MOSFET)

- ✓ No Dimming
- ✓ Down Light → P.9

DIP8

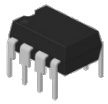

LC5566LD (Isolated, Internal Power MOSFET)

- ✓ Dimming
- ✓ LED Bulb, Down Light → P.10

VSOP16

LC5581AS, LC5581LS (Isolated, Controller)

- ✓ Dimming
- ✓ Down Light, LED Fluorescent Lamp → P.11

Note:
Peripheral diodes are shown in the selection guide of diode.

DC/DC Converter

Back to Contents

Buck Converter

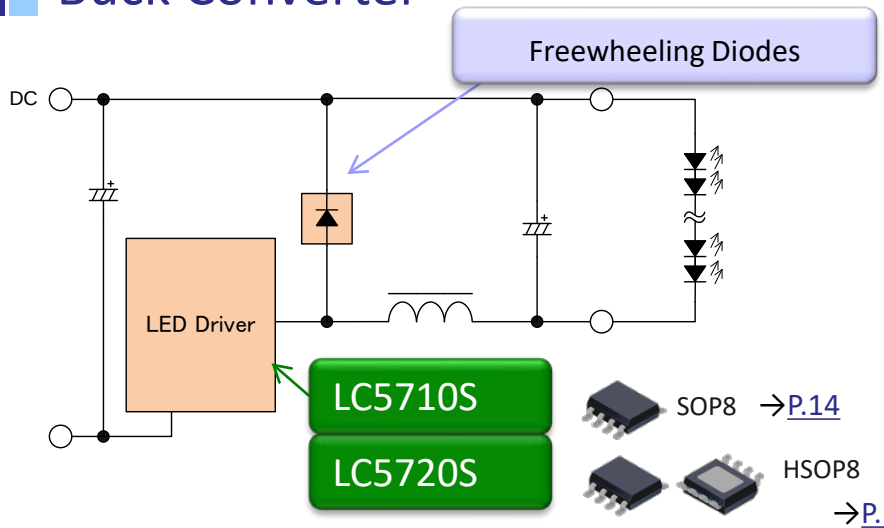

SOP8 →P.14

HSOP8 →P.15

Boost Converter

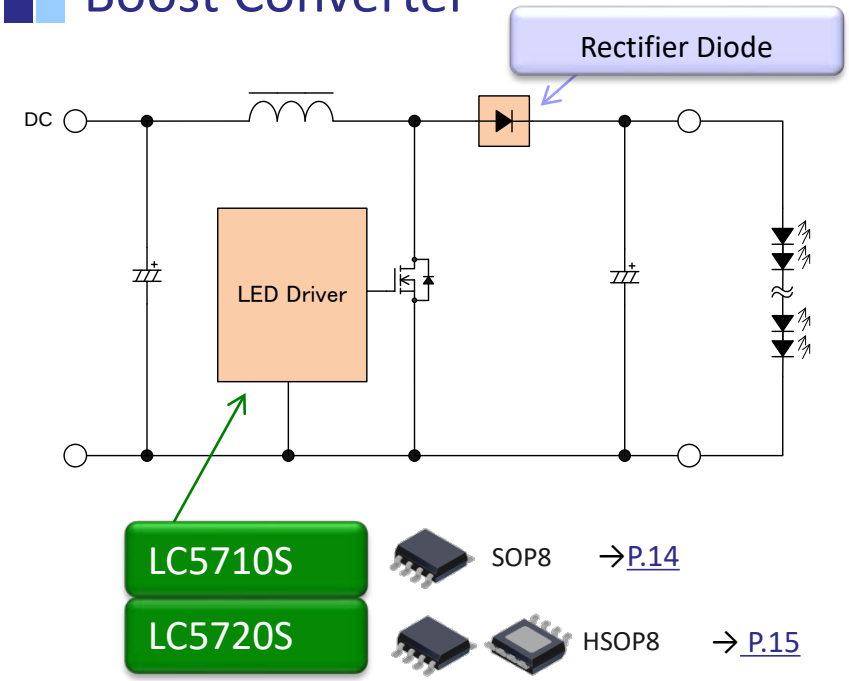

SOP8 →P.14

HSOP8 → P.15

Buck-boost Converter

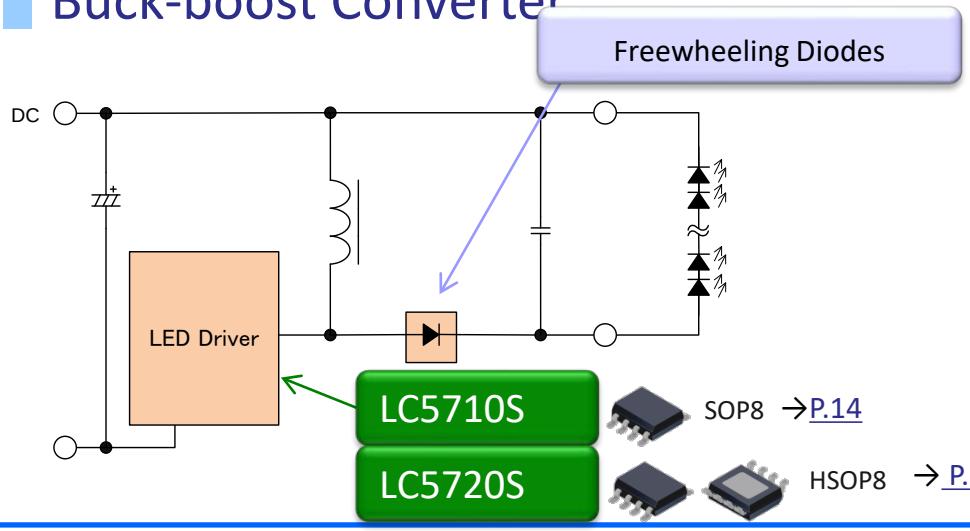

SOP8 →P.14

HSOP8 → P.15

Note:
- Peripheral diodes are shown in the selection guide of diode.
- Built in power MOSFET

High Power and Smart Application

Back to Contents

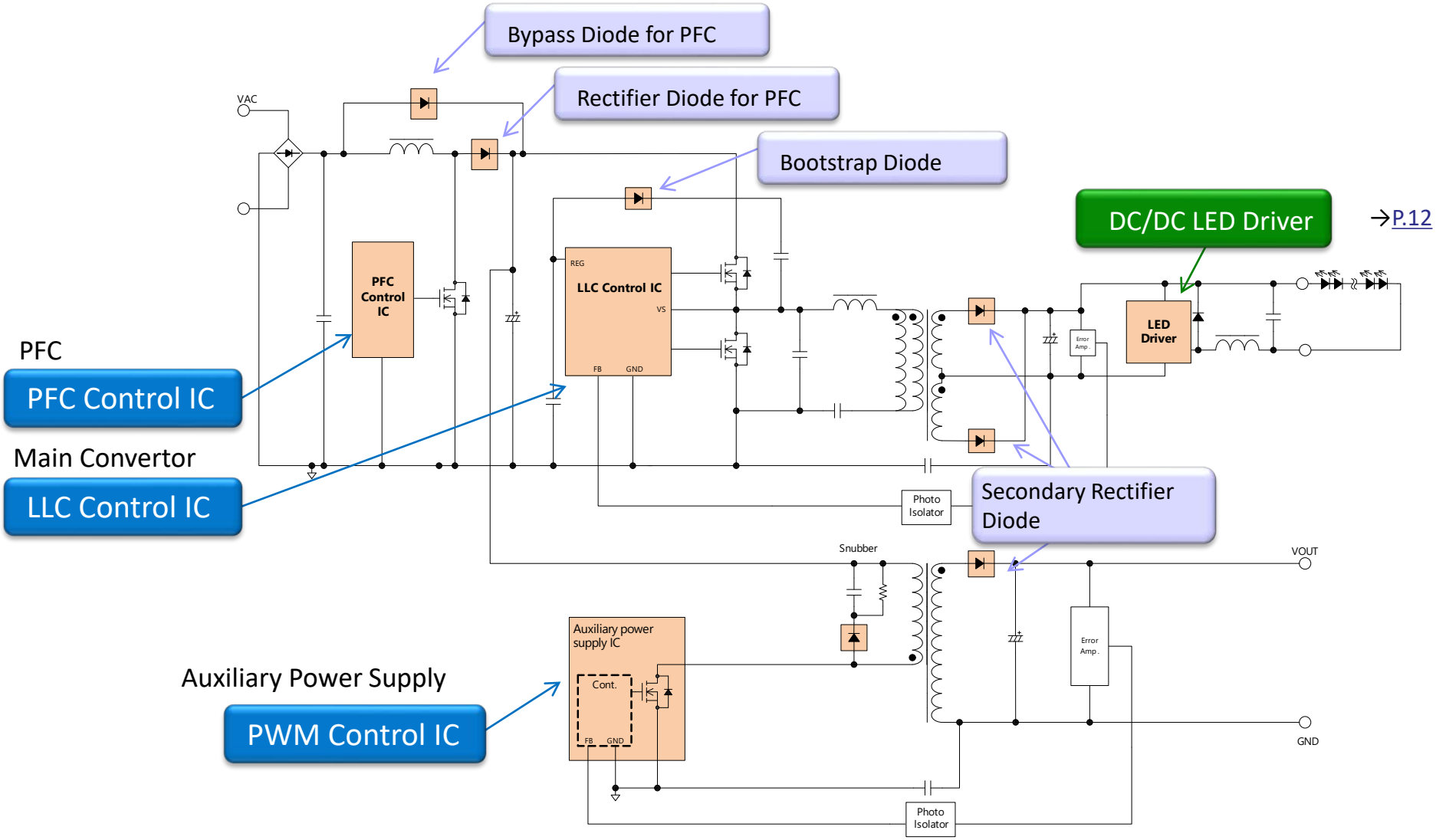

Notes:

- Peripheral diodes are shown in the selection guide of diode.
- PFC, LLC and PWM ICs are shown in selection guide of AC/DC Convertor and PFC.

Off-line LED Driver IC Selection Guide

- High Power Factor in Light Load (Class-C)
- No Input Electrolytic Capacitor Required
- Isolated and Non-isolated Type

LED bulb

Down light

LED fluorescent lamp

Series	Package	Applications	Features	Page
LC5546AD LC5546LD	DIP8 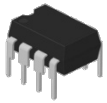	• Down light • LED fluorescent lamp	• 650 V power MOSFET • Startup circuit • Isolated flyback	P.9
LC5566LD	DIP8 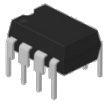	• LED bulb • Down light	• 650 V power MOSFET • Startup circuit • Non-isolated flyback/buck-boost • Analog dimming	P.10
LC5581AS LC5581LS	VSOP16 	• Down light • LED fluorescent lamp	• Controller type (external power MOSFET) • 800 V startup circuit • Non-isolated flyback/buck-boost • Analog dimming • Shorter time from startup to LED lighting	P.11

No Input Electrolytic Capacitor Required, IEC61000-3-2 class-C Isolated LED Driver IC

LC5546AD, LC5546LD

Back to Product List

Package

DIP8

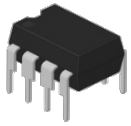

Features

- 650 V Startup Circuit
- One-converter PFC Operation
- Selectable Operation Mode from PWM or Quasi-resonant Operation
- High Power Factor in Light Load (IEC61000-3-2 class C)
- Protections
  OCP: Pulse-by-Pulse
  OLP, OVP, and TSD: Auto-restart or Latched Shutdown

Selection Guide

Part Number	Operation Mode	MOSFET		P_{OUT}		OLP, OVP, TSD
		V_{DSS}	$R_{DS(ON)}$	AC230V	Universal	
LC5546AD	72 kHz PWM/ Quasi-resonant	650 V	1.9 Ω	20 W	16 W	Auto-restart
LC5546LD	60 kHz PWM/ Quasi-resonant					Latched Shutdown

Typical Application

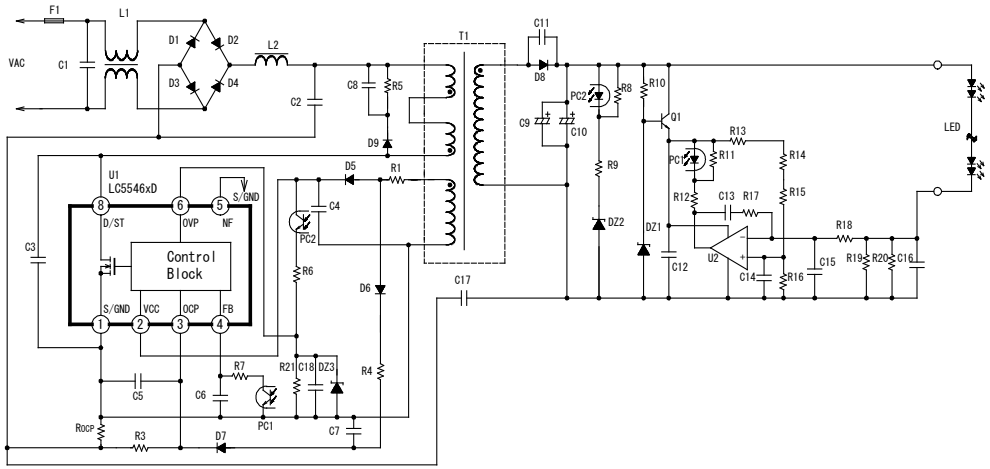

Pin Configuration Definitions

Pin Number	Symbol	Functions
1	S/GND	Power MOSFET source and ground
2	VCC	Supply voltage input and OVP signal input
3	OCP	OCP and QR signal input, and OVP signal input
4	FB	Feedback signal input and OLP signal input
5	NF	No function
6	OVP	OVP signal input
7	—	Pin removed
8	D/ST	Power MOSFET drain and startup current input

LC5566LD

Back to Product List

Package

DIP8

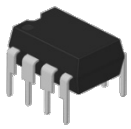

Features

- 650 V Startup Circuit
- One-converter PFC Operation
- Selectable Operation Mode from 60 kHz PWM or Quasi-resonant Operation
- High Power Factor in Light Load (IEC61000-3-2 class C)
- Built-in Error Amplifier (Adjustable Reference Voltage)
- Protections
  OCP: Pulse-by-Pulse
  OLP, OVP, and TSD: Latched Shutdown

Typical Application (Flyback Circuit)

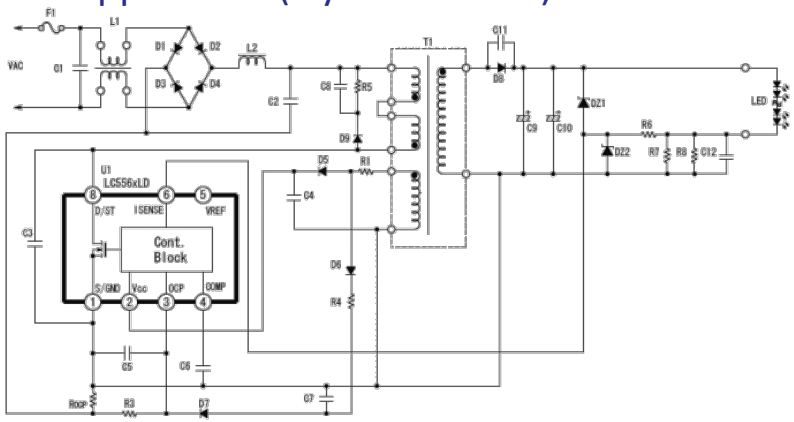

Selection Guide

Part Number	Operation Mode	Power MOSFET		P_{OUT}	
		V_{DSS}	$R_{DS(ON)}$	AC230V	Universal
LC5566LD	60 kHz PWM/ Quasi-resonant	650V	1.9 Ω	20 W	16 W

Pin Configuration Definitions

Pin Number	Symbol	Functions
1	S/GND	Power MOSFET source and ground
2	VCC	Supply voltage input and OVP signal input
3	OCP	OCP and QR signal input, and OVP signal input
4	COMP	Feedback phase-compensation input
5	VREF	Dimming control signal input
6	ISENSE	Output current sensing voltage input
7	—	Pin removed
8	D/ST	Power MOSFET drain and startup current input

No Input Electrolytic Capacitor Required, IEC61000-3-2 Class-C Non-isolated LED Driver IC

LC5581AS, LC5581LS

ラインアップに戻る

Package

VSOP16

Features

- 800 V High Voltage Startup Circuit
- Shorter Time from Startup to LED Lighting
  – COMP Pin Fast Charging Function
  – Two Types Bias Assist
  (Smaller Capacitance of the VCC Pin)
- Selectable Operation Mode from
  60 kHz PWM or Quasi-resonant Operation
- Standby Function
- Analog Dimming Function
- Protections
  OCP: Pulse-by-pulse
  OLP: Auto-restart
  OVP: Latched Shutdown/Auto-restart

Selection Guide

Part Number	Operation Mode	Protection Operation	
		OLP	OVP
LC5581AS	60 kHz PWM/ Quasi-resonant	Auto-restart	Auto-restart
LC5581LS		Auto-restart	Latched Shutdown

Typical Application (Flyback Circuit)

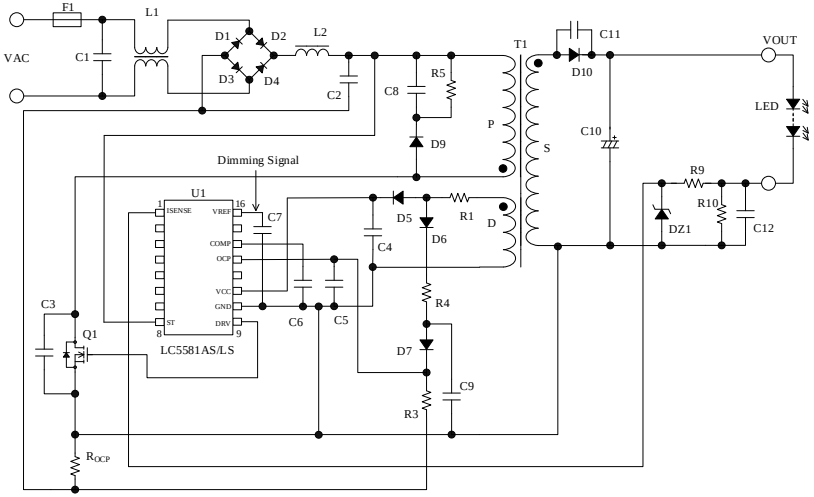

Pin Configuration Definitions

Pin Number	Symbol	Functions
1	ISENSE	Feedback current detection
2 - 7	(NC)	No connection
8	ST	Startup current input
9	DRV	Drive output
10	GND	Ground
11	VCC	Power supply voltage input for control part and OCP pin overvoltage protection signal input
12	(NC)	No connection
13	OCP	Input for overcurrent protection and quasi-resonant signal
14	COMP	Feedback Phase compensation
15	(NC)	No connection
16	VREF	Dimming signal input and standby signal input

DC/DC LED Driver IC Selection Guide

- For Intelligent LED Lighting Application
- For LED Back Light Application
- Individual Channels Control

Display

Back Light

MR16

Ceiling light

Street light

Series	Output Count	$V_{IN(MAX)}$	I_O	$V_{LED(MAX)}$	Package	Features	Page
LC101N (Current Balancer)	1	35 V	150 mA	35 V	DFN8 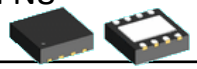	Balancer	P.13
LC5710S	1	58 V	1.0 A	58 V	SOP8 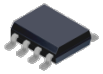	• Allows buck, buck-boost, and boost circuit • PWM dimming • Built-in power MOSFET	P.14
LC5720S	1	50 V	2.0 A	50 V	HSOP8 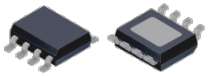	• Allows buck, buck-boost, and boost circuit • PWM dimming • Built-in power MOSFET	P.15

LC101N

Back to Product List

Package

DFN8

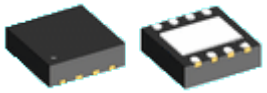

Selection Guide

Part Number	$I_{LED(MAX)}$	$V_{LED\ MAX}$	V_{IN}	V_{FB}
LC101N	15 mA to 150 mA	35 V	2.4 V to 35 V	200 mV ± 3%

Features

- Current Balancer Across LED String
- Small Package (DFN8)
- Power Dissipation, P_D : 1.3 W
- No Input and Output Capacitor Required
- Maximum Dropout Voltage, ΔV_{DIF} : 350 mV
- Protections
  - OCP
  - TSD: Activation Temperature is 130 °C without Hysteresis

Typical Application

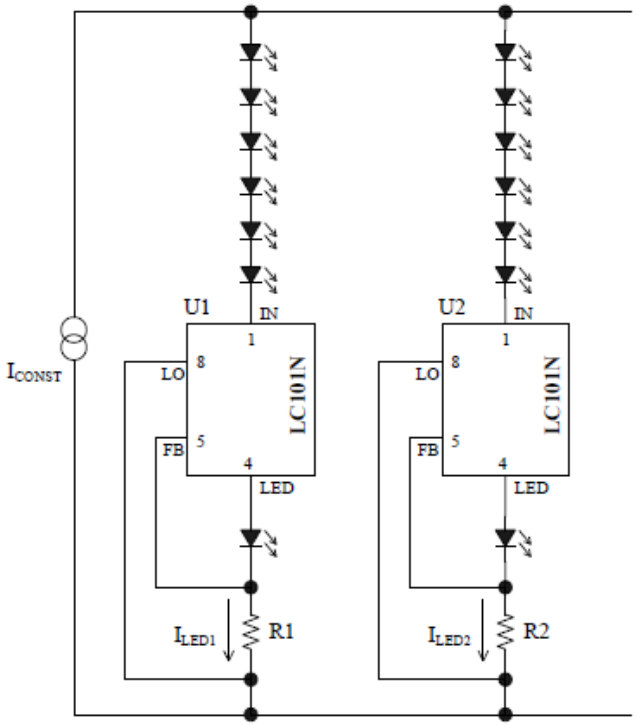

Pin Configuration Definitions

Pin Number	Symbol	Functions
1	IN	Input
2, 3	NC	—
4	LED	Output
5	FB	LED current detection signal input (positive side)
6, 7	NC	—
8	LO	LED current detection signal input (negative side)

LC5710S

Back to Product List

Package

SOP8

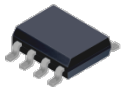

Selection Guide

Part Number	$I_{LED(MAX)}$	V_{IN}	MOSFET $R_{DS(ON)}$	f_{OSC}
LC5710S	1.0 A	5 V to 58 V	0.550 Ω(typ.)	100 kHz to 500 kHz

Features

- Allows Buck, Buck-boost, and Boost Circuit
- Maximum LED Current, I_{LED} : 1.0 A
- Adjustable Frequency Range: 100 kHz to 500 kHz
- V_{CS}: 100 mV ± 3 %
- High Accuracy Dimming Control
  Maximum PWM Frequency : 20 kHz
  DC Input Voltage: 0.2 V to 2 V
- Protections
  UVLO, OCP, TSD, LED OVP,
  LED Open and LED Cross Connection Detection

Pin Configuration Definitions

Pin Number	Symbol	Functions
1	COMP	Phase compensation
2	RT	Frequency adjust
3	GND	Ground
4	SW	Switch output
5	VIN	DC input
6	CSP	LED current sense (+)
7	CSN	LED current sense (-)
8	DIM	Dimming signal input

Typical Applications

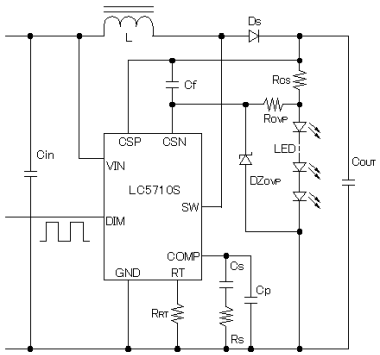

Boost Converter

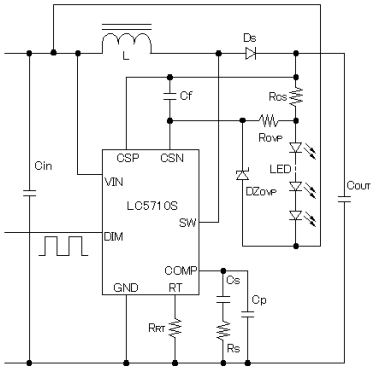

Buck-boost Converter

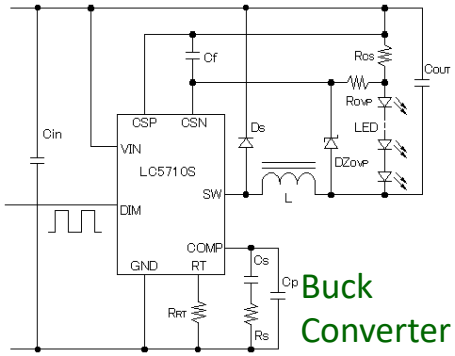

Buck Converter

LC5720S

Back to Product List

Package

HSOP8

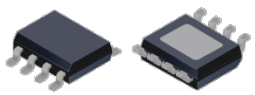

Selection Guide

Part Number	$I_{LED(MAX)}$	V_{IN}	MOSFET $R_{DS(ON)}$	f_{OSC}
LC5720S	2.0 A	9.5 V to 50 V	0.215 Ω(typ.)	500 kHz

Features

- Allows Buck, Buck-boost, and Boost Circuit
- Maximum LED Current, I_{LED} : 1.0 A
- Frequency : 500 kHz
- V_{CS} : 100 mV ± 5 %
- High efficiency, η > 90% (typ.)
- Maximum PWM Dimming Frequency : 20 kHz
- Protections
  OCP : Pulse-by-Pulse
  OVP, TSD: Auto-restart

Pin Configuration Definitions

Pin Number	Symbol	Functions
1	COMP	Phase compensation
2	NC	—
3	GND	Ground
4	SW	Output
5	VIN	DC input
6	CSP	Reference input pin of current detection
7	CSN	Negative input pin of current detection
8	DIM	PWM dimming signal input

Typical Applications

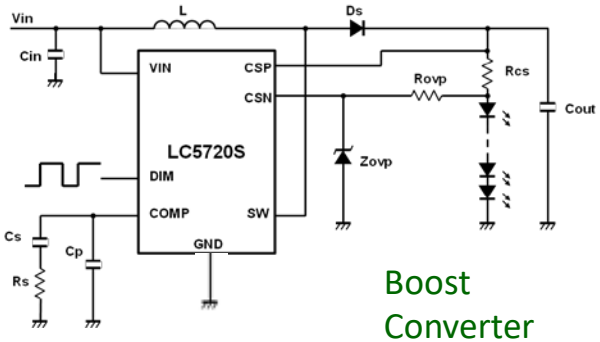

Boost Converter

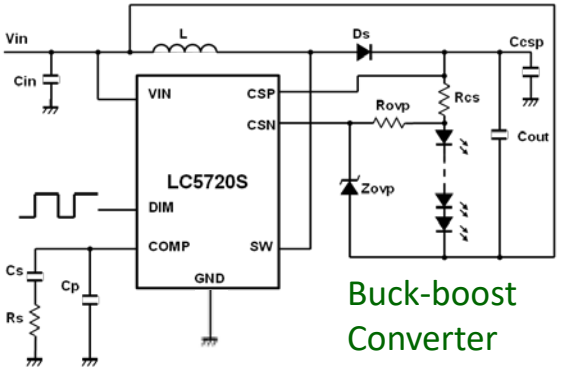

Buck-boost Converter

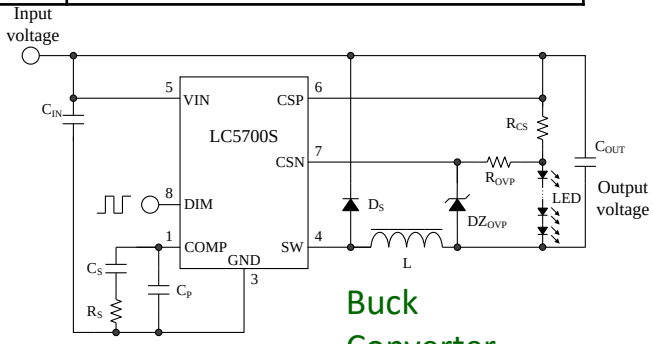

Buck Converter

Important Notes

- All data, illustrations, graphs, tables and any other information included in this document (the "Information") as to Sanken's products listed herein (the "Sanken Products") are current as of the date this document is issued. The Information is subject to any change without notice due to improvement of the Sanken Products, etc. Please make sure to confirm with a Sanken sales representative that the contents set forth in this document reflect the latest revisions before use.
- The Sanken Products are intended for use as components of general purpose electronic equipment or apparatus (such as home appliances, office equipment, telecommunication equipment, measuring equipment, etc.). Prior to use of the Sanken Products, please put your signature, or affix your name and seal, on the specification documents of the Sanken Products and return them to Sanken. When considering use of the Sanken Products for any applications that require higher reliability (such as transportation equipment and its control systems, traffic signal control systems or equipment, disaster/crime alarm systems, various safety devices, etc.), you must contact a Sanken sales representative to discuss the suitability of such use and put your signature, or affix your name and seal, on the specification documents of the Sanken Products and return them to Sanken, prior to the use of the Sanken Products. The Sanken Products are not intended for use in any applications that require extremely high reliability such as: aerospace equipment; nuclear power control systems; and medical equipment or systems, whose failure or malfunction may result in death or serious injury to people, i.e., medical devices in Class III or a higher class as defined by relevant laws of Japan (collectively, the "Specific Applications"). Sanken assumes no liability or responsibility whatsoever for any and all damages and losses that may be suffered by you, users or any third party, resulting from the use of the Sanken Products in the Specific Applications or in manner not in compliance with the instructions set forth herein.
- In the event of using the Sanken Products by either (i) combining other products or materials or both therewith or (ii) physically, chemically or otherwise processing or treating or both the same, you must duly consider all possible risks that may result from all such uses in advance and proceed therewith at your own responsibility.
- Although Sanken is making efforts to enhance the quality and reliability of its products, it is impossible to completely avoid the occurrence of any failure or defect or both in semiconductor products at a certain rate. You must take, at your own responsibility, preventative measures including using a sufficient safety design and confirming safety of any equipment or systems in/for which the Sanken Products are used, upon due consideration of a failure occurrence rate and derating, etc., in order not to cause any human injury or death, fire accident or social harm which may result from any failure or malfunction of the Sanken Products. Please refer to the relevant specification documents and Sanken's official website in relation to derating.
- No anti-radioactive ray design has been adopted for the Sanken Products.
- The circuit constant, operation examples, circuit examples, pattern layout examples, design examples, recommended examples, all information and evaluation results based thereon, etc., described in this document are presented for the sole purpose of reference of use of the Sanken Products.
- Sanken assumes no responsibility whatsoever for any and all damages and losses that may be suffered by you, users or any third party, or any possible infringement of any and all property rights including intellectual property rights and any other rights of you, users or any third party, resulting from the Information.
- No information in this document can be transcribed or copied or both without Sanken's prior written consent.
- Regarding the Information, no license, express, implied or otherwise, is granted hereby under any intellectual property rights and any other rights of Sanken.
- Unless otherwise agreed in writing between Sanken and you, Sanken makes no warranty of any kind, whether express or implied, including, without limitation, any warranty (i) as to the quality or performance of the Sanken Products (such as implied warranty of merchantability, and implied warranty of fitness for a particular purpose or special environment), (ii) that any Sanken Product is delivered free of claims of third parties by way of infringement or the like, (iii) that may arise from course of performance, course of dealing or usage of trade, and (iv) as to the Information (including its accuracy, usefulness, and reliability).
- In the event of using the Sanken Products, you must use the same after carefully examining all applicable environmental laws and regulations that regulate the inclusion or use or both of any particular controlled substances, including, but not limited to, the EU RoHS Directive, so as to be in strict compliance with such applicable laws and regulations.
- You must not use the Sanken Products or the Information for the purpose of any military applications or use, including but not limited to the development of weapons of mass destruction. In the event of exporting the Sanken Products or the Information, or providing them for non-residents, you must comply with all applicable export control laws and regulations in each country including the U.S. Export Administration Regulations (EAR) and the Foreign Exchange and Foreign Trade Act of Japan, and follow the procedures required by such applicable laws and regulations.
- Sanken assumes no responsibility for any troubles, which may occur during the transportation of the Sanken Products including the falling thereof, out of Sanken's distribution network.
- Although Sanken has prepared this document with its due care to pursue the accuracy thereof, Sanken does not warrant that it is error free and Sanken assumes no liability whatsoever for any and all damages and losses which may be suffered by you resulting from any possible errors or omissions in connection with the Information.
- Please refer to our official website in relation to general instructions and directions for using the Sanken Products, and refer to the relevant specification documents in relation to particular precautions when using the Sanken Products.
- All rights and title in and to any specific trademark or tradename belong to Sanken and such original right holder(s).

DSGN-CEZ-16003