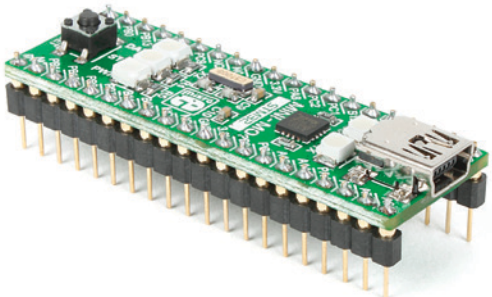

MINI-M0™

development board for STM32

The whole STM32 development board fitted in DIP40 form factor, containing high-performance STM32F051R8 ARM Cortex-M0 microcontroller.

MINI ARM

MikroElektronika
DEVELOPMENT TOOLS | COMPILERS | BOOKS

TO OUR VALUED CUSTOMERS

I want to express my thanks to you for being interested in our products and for having confidence in MikroElektronika.

The primary aim of our company is to design and produce high quality electronic products and to constantly improve the performance thereof in order to better suit your needs.

Nebojsa Matic
General Manager

The STM32, ARM® and Windows® logos and product names are trademarks of STMicroelectronics®, ARM® Holdings and Microsoft® in the U.S.A. and other countries.

Table of Contents

Introduction to MINI-M0 for STM32 4
Key features 4
System Specification 5
1. Programming with mikroBootloader 6
step 1 – Connecting MINI-M0 for STM32 6
step 2 – Browsing for .HEX file 7
step 3 – Selecting .HEX file 7
step 4 – Uploading .HEX file 8
step 5 – Finish upload 9
2. Schematic 10
3. Pinout 11
4. Dimensions 12

Introduction to MINI-M0 for STM32

Miniature and high-performance development tool designed to work as stand alone device or as MCU card in DIP40 socket. MINI-M0 for STM32 is preprogrammed with USB-UART bootloader so it is not necessary to have external programmer. If there is need for external programmers (mikroProg™ or ST-LINK V2) attach it to MINI-M0 for STM32 via pads marked with PA14 (TCK/SWC), PA13 (TMS/SWD), and RST#.

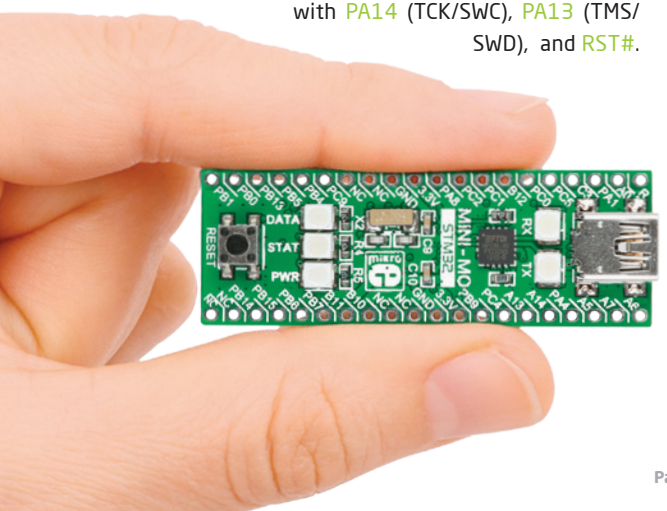

Key features

01 Connection Pads
02 USB MINI-B connector
03 DATA LED
04 STAT LED
05 POWER supply LED
06 Reset button
07 Power supply regulator
08 Microcontroller STM32F051R8
09 16 MHz Crystal oscillator
10 32.768kHz Crystal oscillator
11 FTDI FT230x chip
12 UART RX LED
13 UART TX LED

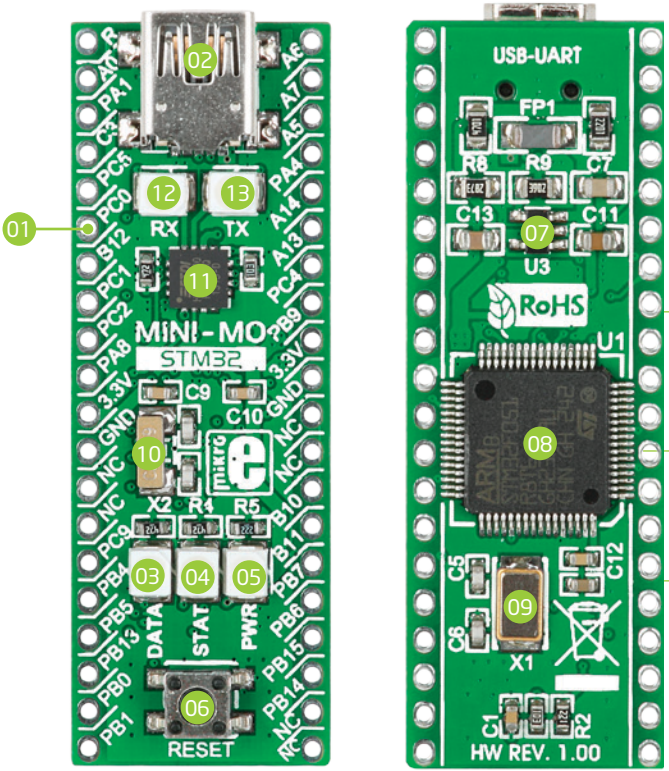

System Specification

power supply

3.3V via pads or 5V via USB

power consumption

depends on MCU state (max current into 3.3V pad is 300mA)

board dimensions

50.8 x 17.78mm (2 x 0.7")

weight

~6g (0.013 lbs)

1. Programming with mikroBootloader

You can program the microcontroller with bootloader which is preprogrammed into the device by default. To transfer .HEX file from a PC to MCU you need bootloader software (**UART mikroBootloader**) which can be downloaded from:

http://www.mikroe.com/downloads/get/2055/mini_m0_bootloader_v220.zip

After software is downloaded unzip it to desired location and start mikroBootloader USB UART software.

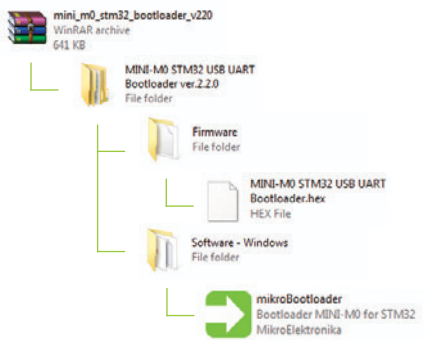

mikroBootloader software

note *Before starting mikroBootloader software, connect MINI M0 for STM32 to a PC using a USB cable provided with the package*

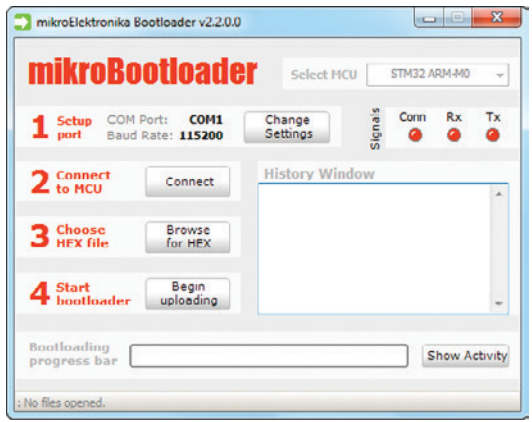

Figure 2-1: mikroBootloader window

01 When you start mikroBootloader software, a window as shown in **Figure 2-1** should appear

Identifying device COM port

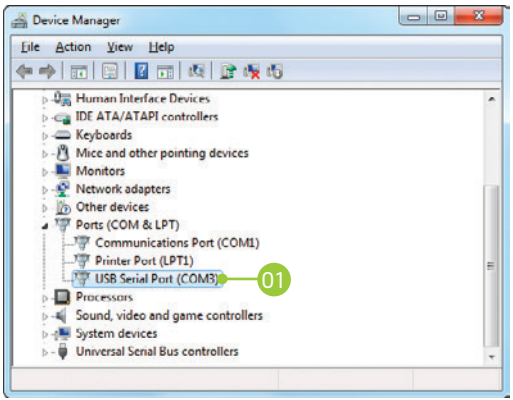

Figure 2-2: Identifying COM port

01 Open **Device Manager** window and expand **Ports section** to see which COM port is assigned to MINI M0 for STM32 (in this case it is COM3)

step 1 - Choosing COM port

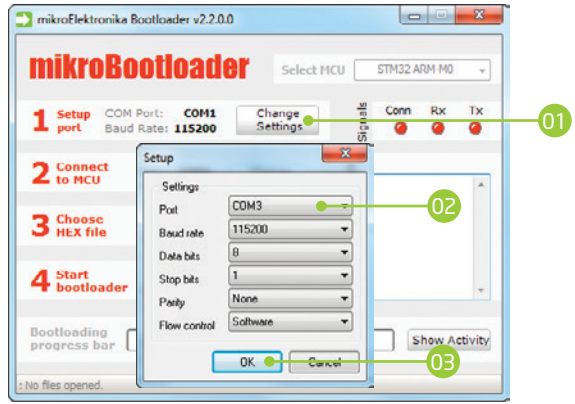

Figure 2-3: Choosing COM port

01 Click the **Change Settings** button

02 From the drop down list, select appropriate COM **port** (in this case it is COM3)

03 Click **OK**

step 2 - Establishing Connection

Figure 2-4: Connecting with mikroBootloader

01 Press the **Reset** button on MINI M0 for STM32 board and click the **Connect** button within 5s, otherwise the existing microcontroller program will run. If connected, the button's caption will be changed to **Disconnect**

step 3 - Browsing for .HEX file

Figure 2-5: Browse for HEX

01 Click the **Browse for HEX** button and from a pop-up window (Figure 2-6) choose a .HEX file to be uploaded to MCU memory

step 4 - Selecting .HEX file

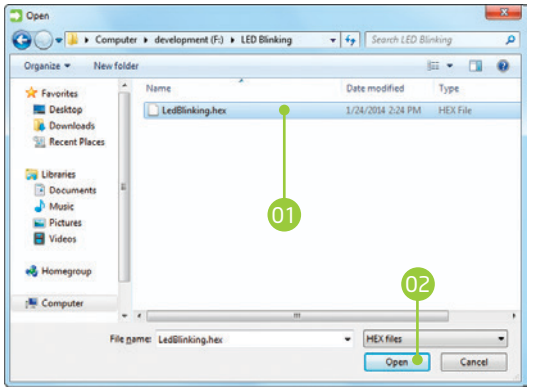

Figure 2-6: Locating and selecting .hex file

01 Select .HEX file using open dialog window.

02 Click the **Open** button

step 5 - Uploading .HEX file

Figure 2-7: Begin uploading

01 To start .HEX file bootloding click the **Begin uploading** button

2. Schematic

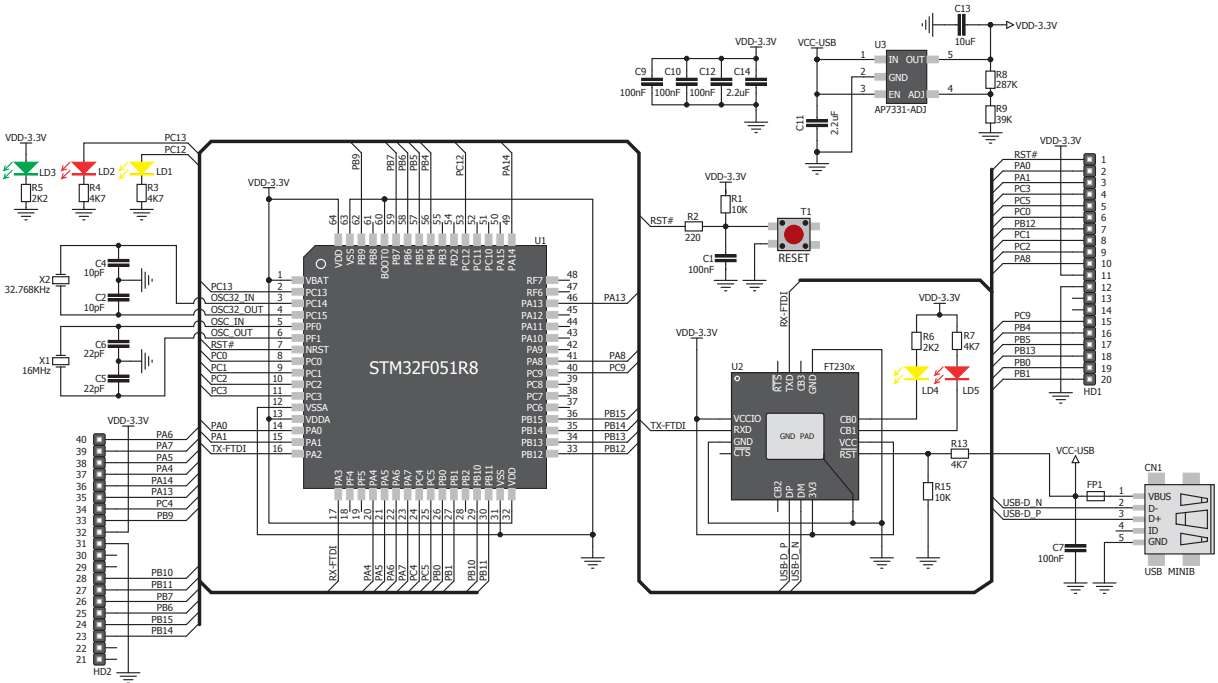

STM32F051R8
U1
U2
U3
FT230x
AP7331-ADJ
VDD-3.3V
VCC-USB
RESET
T1
HD1
HD2
CN1
USB MINIB
X1
16MHz
X2
32.768KHz

3. Pinout

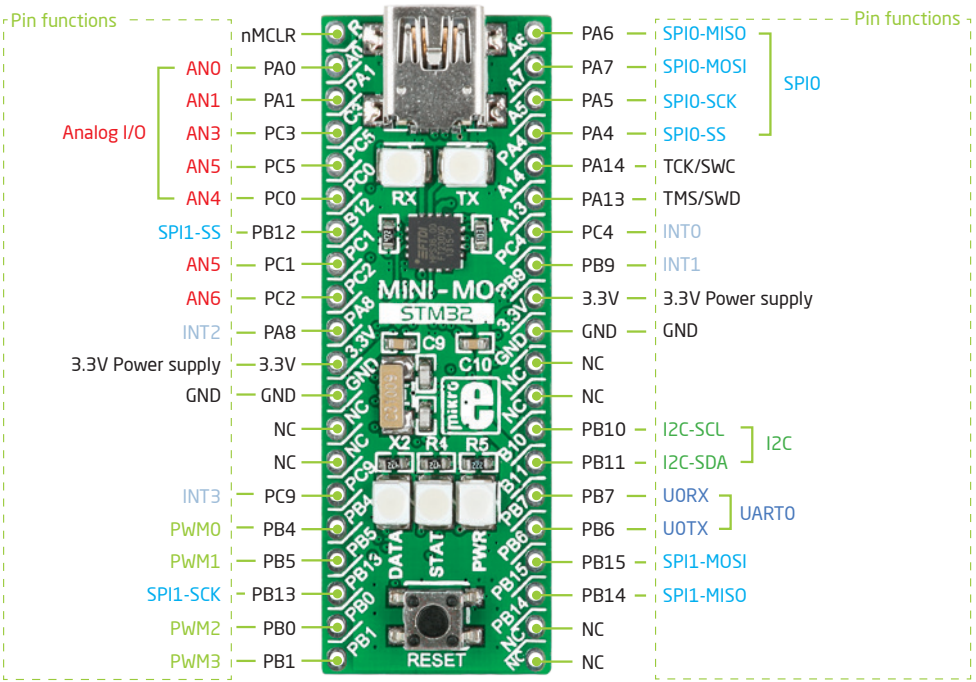
Pin functions
nMCLR
AN0
PA0
AN1
PA1
Analog I/O
AN3
PC3
AN5
PC5
AN4
PC0
SPI1-SS
PB12
AN5
PC1
AN6
PC2
INT2
PA8
3.3V Power supply
3.3V
GND
GND
NC
NC
INT3
PC9
PWM0
PB4
PWM1
PB5
SPI1-SCK
PB13
PWM2
PB0
PWM3
PB1
MiNI-MO
STM32
RX
TX
RESET
DATA
STAT
PWR
Pin functions
PA6
SPI0-MISO
PA7
SPI0-MOSI
PA5
SPI0-SCK
PA4
SPI0-SS
SPI0
PA14
TCK/SWC
PA13
TMS/SWD
PC4
INT0
PB9
INT1
3.3V
3.3V Power supply
GND
GND
NC
NC
NC
PB10
I2C-SCL
PB11
I2C-SDA
I2C
PB7
U0RX
PB6
U0TX
UART0
PB15
SPI1-MOSI
PB14
SPI1-MISO
NC
NC
Analog Lines
Interrupt Lines
SPI Lines
I2C Lines
UART lines
PWM lines

4. Dimensions

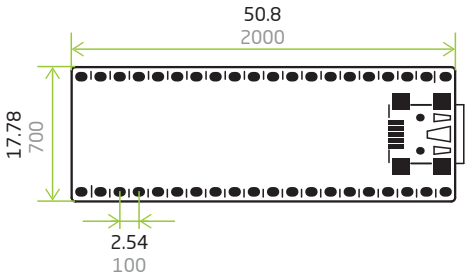

Legend

mm

mils

Notes:

Notes:

DISCLAIMER

All the products owned by MikroElektronika are protected by copyright law and international copyright treaty. Therefore, this manual is to be treated as any other copyright material. No part of this manual, including product and software described herein, may be reproduced, stored in a retrieval system, translated or transmitted in any form or by any means, without the prior written permission of MikroElektronika. The manual PDF edition can be printed for private or local use, but not for distribution. Any modification of this manual is prohibited.

MikroElektronika provides this manual 'as is' without warranty of any kind, either expressed or implied, including, but not limited to, the implied warranties or conditions of merchantability or fitness for a particular purpose.

MikroElektronika shall assume no responsibility or liability for any errors, omissions and inaccuracies that may appear in this manual. In no event shall MikroElektronika, its directors, officers, employees or distributors be liable for any indirect, specific, incidental or consequential damages (including damages for loss of business profits and business information, business interruption or any other pecuniary loss) arising out of the use of this manual or product, even if MikroElektronika has been advised of the possibility of such damages. MikroElektronika reserves the right to change information contained in this manual at any time without prior notice, if necessary.

HIGH RISK ACTIVITIES

The products of MikroElektronika are not fault - tolerant nor designed, manufactured or intended for use or resale as on - line control equipment in hazardous environments requiring fail - safe performance, such as in the operation of nuclear facilities, aircraft navigation or communication systems, air traffic control, direct life support machines or weapons systems in which the failure of Software could lead directly to death, personal injury or severe physical or environmental damage ('High Risk Activities'). MikroElektronika and its suppliers specifically disclaim any expressed or implied warranty of fitness for High Risk Activities.

TRADEMARKS

The MikroElektronika name and logo, the MikroElektronika logo, mikroC™, mikroBasic™, mikroPascal™, MINI™, EasyMX PRO™, mikroBUS™, Click Boards™, mikroProg™, and mikromedia™ are trademarks of MikroElektronika. All other trademarks mentioned herein are property of their respective companies.
All other product and corporate names appearing in this manual may or may not be registered trademarks or copyrights of their respective companies, and are only used for identification or explanation and to the owners' benefit, with no intent to infringe.

Copyright © MikroElektronika, 2014, All Rights Reserved.

If you want to learn more about our products, please visit our website at www.mikroe.com
If you are experiencing some problems with any of our products or just need additional information, please place your ticket at www.mikroe.com/support/
If you have any questions, comments or business proposals, do not hesitate to contact us at office@mikroe.com

MINI-M0 for STM32
ver. 1.00
0 100000 025291