REVISIONS						
REV	ZONE	ECO#	DESCRIPTION	DRAW	APPD	DATE
A			INITIAL RELEASE	KC	-	

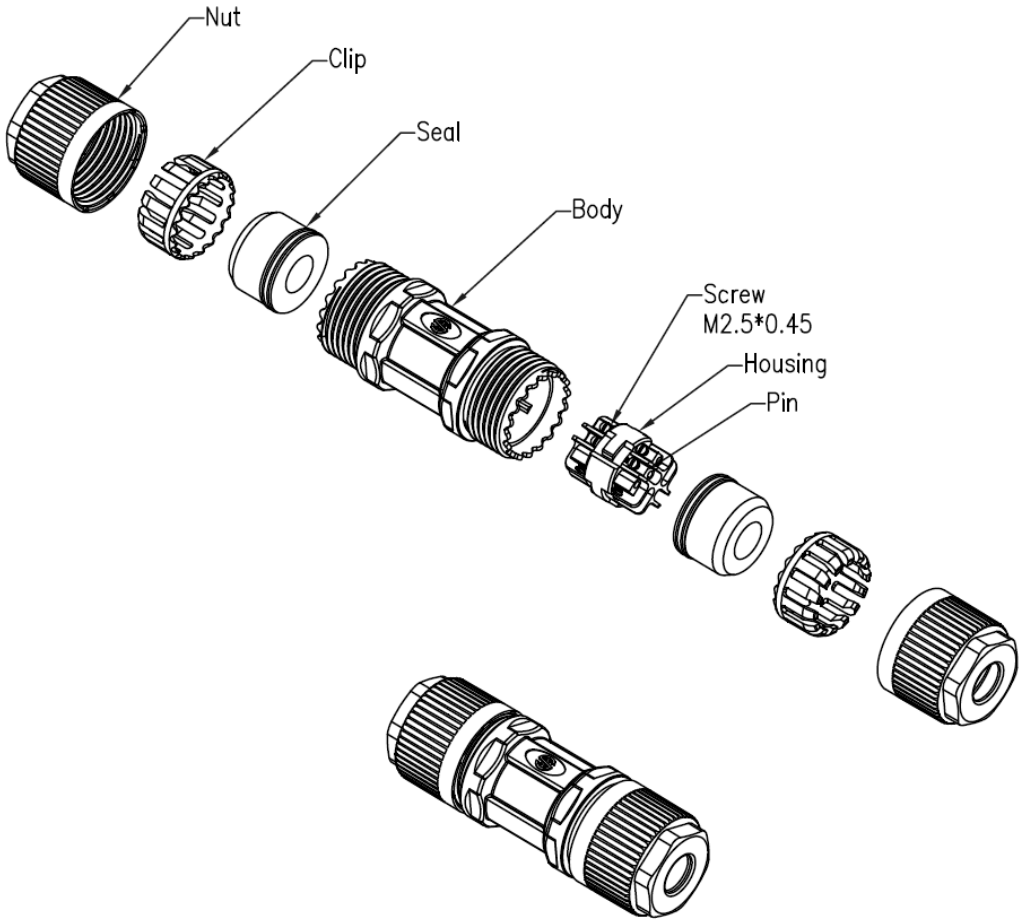

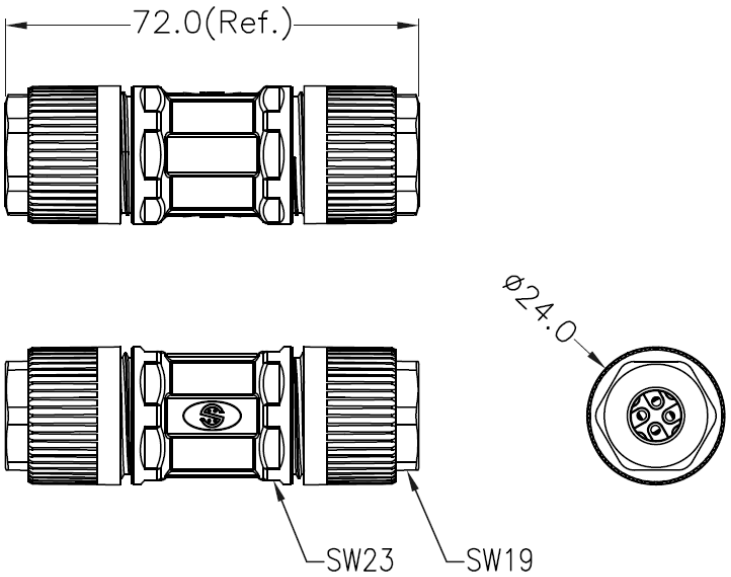

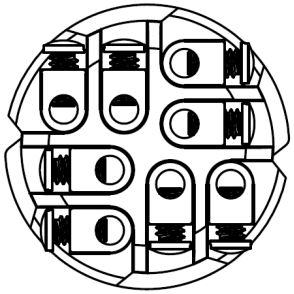

Pin Assignment
Front View

NOTES:

1. WATERPROOF RATE: IP68 (NO INGRESS OF DUST/PROTECTED AGAINST HARMFUL EFFECTS CAUSED IN 5 METER WATER WITHIN 30 MINUTES OF MATING)
2. TEMPERATURE RANGE: -25°C TO +85°C
3. CURRENT RATING: 7A MAX
4. CONDUCTOR RANGE: 18AWG~26AWG
5. CABLE DIAMETER: Ø6.5~Ø8.5mm
6. MATERIAL:
   HOUSING: NYLON, BLACK
   PIN: BRASS, NICKEL PLATED
   SCREW: STEEL, NICKEL PLATED
7. SCREW TORQUE: 3.0 Kgf. cm MIN
8. NUT TORQUE: 19.6 Kgf. cm MIN
9. ONE SET UNASSEMBLED IN ONE PE BAG

NOTE: CAD GENERATED DRAWING DO NOT UPDATE MANUALLY.

TITLE: CABLE JOINER, ASSY, 8PIN

UNLESS OTHERWISE SPECIFIED, DIMENSIONS ARE IN MM
TOLERANCE EXCEPT AS NOTED:
ANGULAR ± X° DECIMAL .XX ± .XX
DECIMAL .X ± .X DECIMAL .XXX ± .XXX

PART NUMBER: IPJNR-08-SRFT

THIRD ANGLE PROJECTION

DRAWN	APVD	DATE	REV
KC	-	8/23/2019	A

CAGE CODE: 2A589 | SIZE: A | SCALE: NTS | SHEET 1 OF 1

©COPYRIGHT 2018 PEI-GENESIS
ENGINEERING PRODUCT DEVELOPMENT

SURE-SEAL
2180 Hornig Road, Philadelphia, PA 19116

NOTICE OF CONFIDENTIALITY
THIS DRAWING IS THE PROPERTY OF PEI-Genesis, ALL RIGHTS RESERVED. REPRODUCTION BY ANY MEANS OR DISTRIBUTION TO THIRD PARTIES IS STRICTLY PROHIBITED WITHOUT THE WRITTEN PERMISSION OF AN AUTHORIZED AGENT OF PEI-GENESIS.