| PART NAME | IP67 SERIES NEMA DIE CAST ALUMINUM BOX | PART No. | IPS-3923 | REVISION DATE | 1/21/2011 |
|---|---|---|---|---|---|

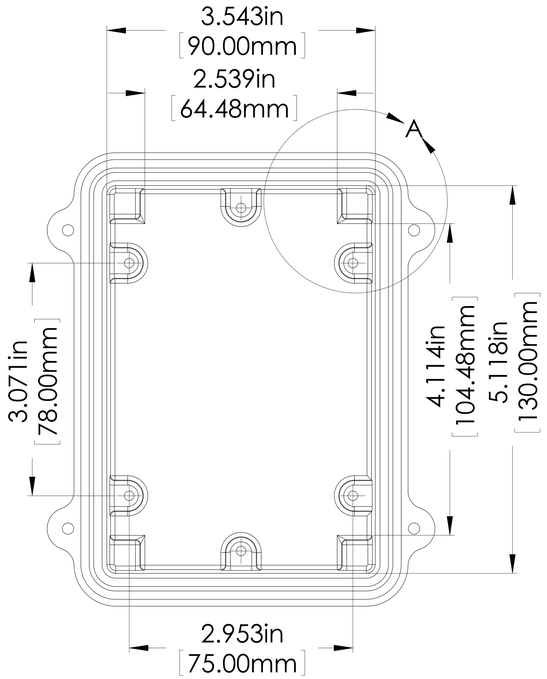


INSIDE BODY DETAILS

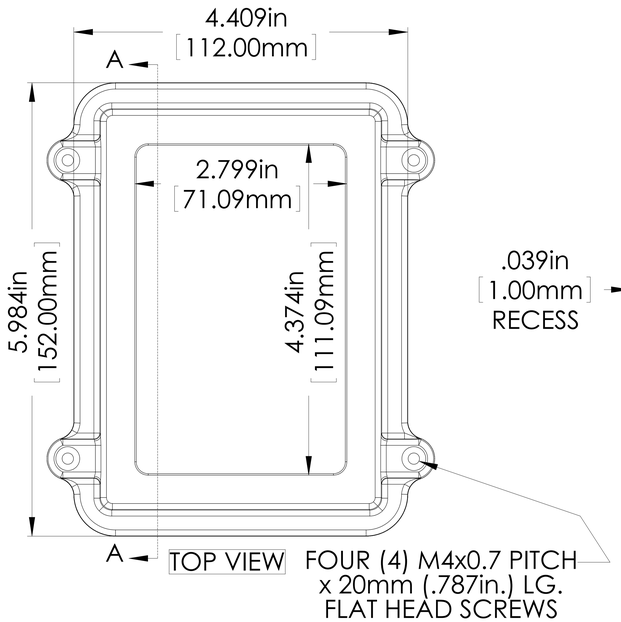


TOP VIEW

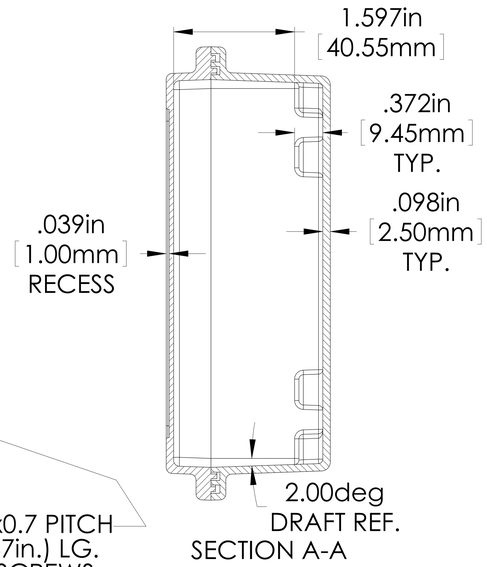


SECTION A-A

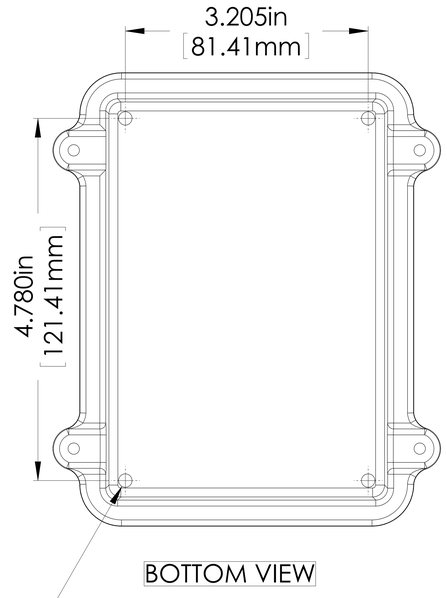


BOTTOM VIEW

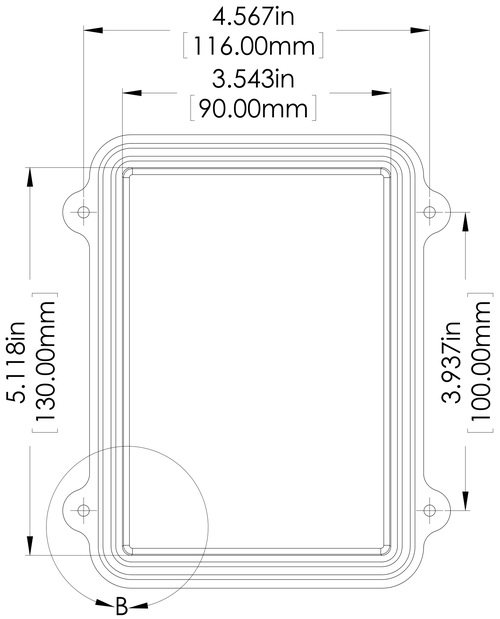


INSIDE COVER DETAILS

∅.177in
[4.50mm]
x 7.5mm (.295in.) DP. (4x)
[ACCEPTS M5 x 10mm(.394in.) LG.
SELF-TAPPING SCREWS.
(NOT SUPPLIED)]

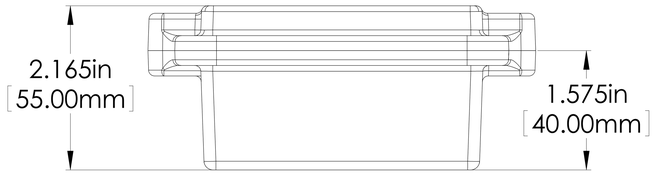


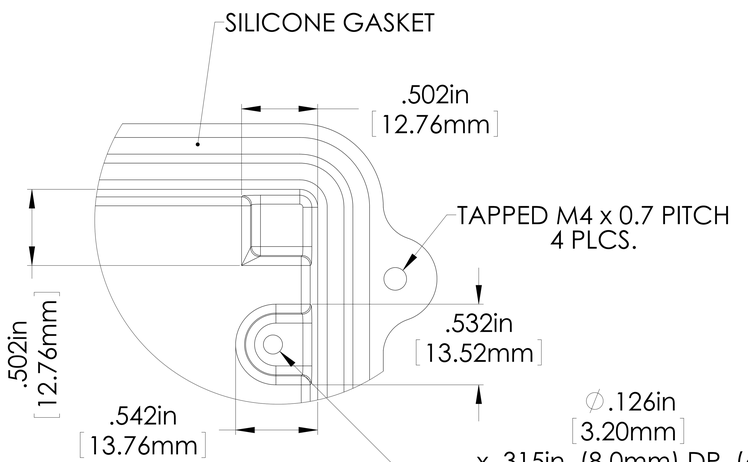


DETAIL A
SCALE 4 : 1

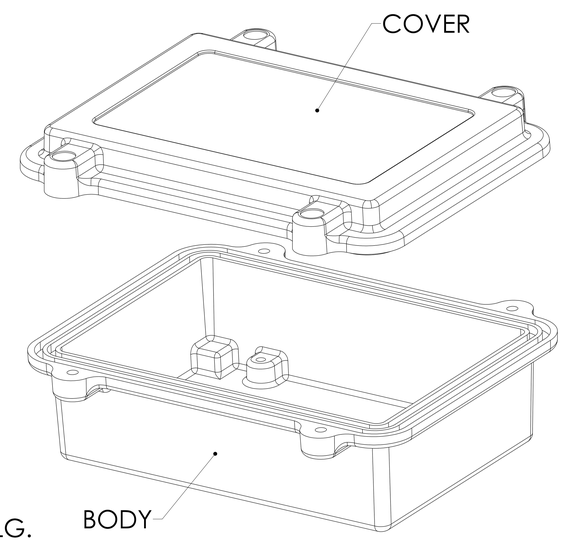


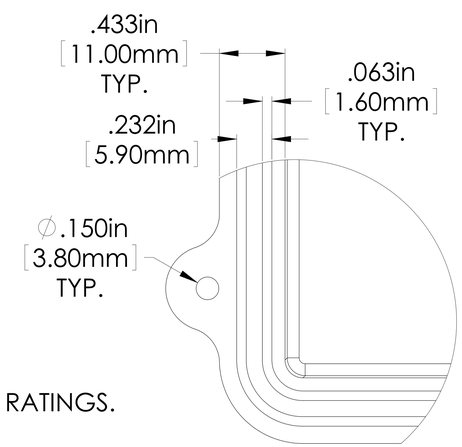


DETAIL B
SCALE 4 : 1

MEETS NEMA 1, 2, 4, 4X, 12, 13 AND IP67 RATINGS.

MATERIAL: ALUMINUM ALLOY ADC-12

FINISH: NATURAL

TOLERANCES: ALL HOLE DIAMETERS: ±.005in (.13mm)
ALL OTHER DIMENSIONS: ±.015in (.38mm)