THIS COPY IS PROVIDED ON A RESTRICTED BASIS AND IS NOT TO BE USED IN ANY WAY DETRIMENTAL TO THE INTERESTS OF PANDUIT CORP.

PANDUIT P/N	WEIGHT
S2LR	181.44 Kg/EACH 0.40 LBS/EACH

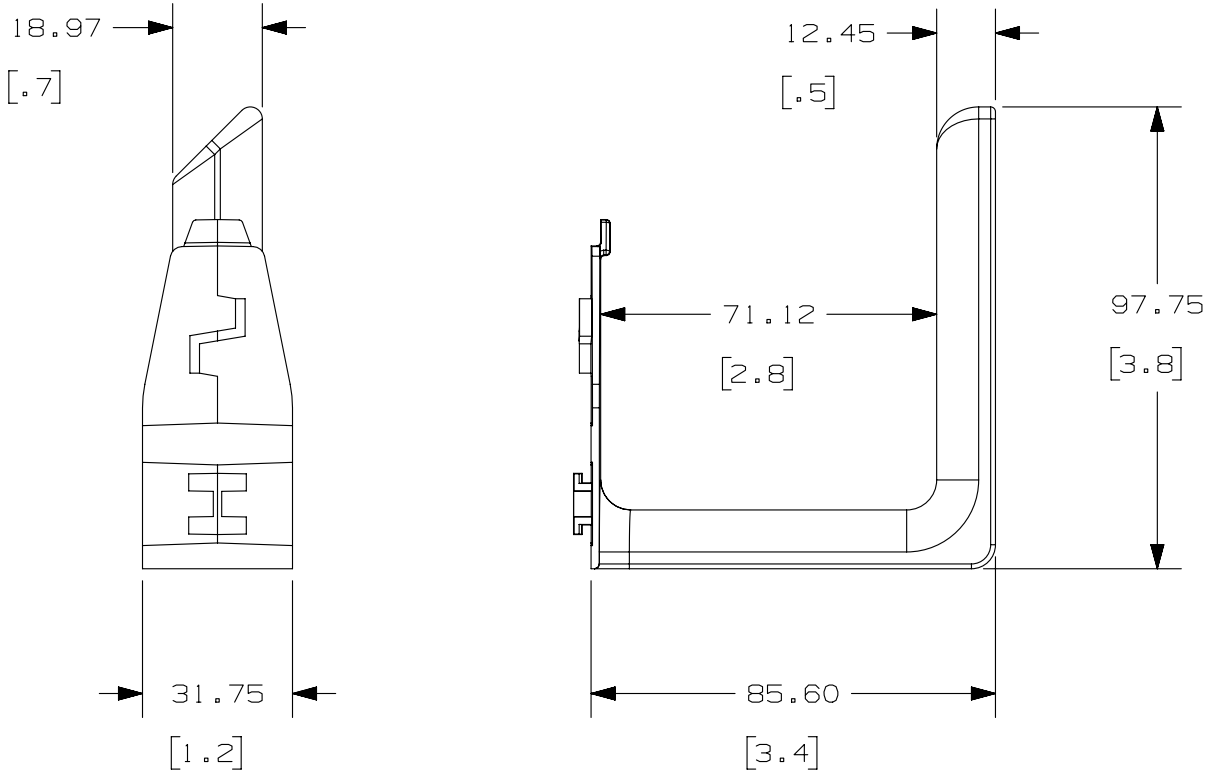

NOTES:
1. VISIT OUR ON-LINE CATALOG AT WWW.PANDUIT.COM FOR A LIST OF CURRENT PARTS APPLICABLE FOR USE WITH THIS PRODUCT.
2. PRIMARY DIMENSIONS ARE IN MILLIMETERS (mm).
3. PARTS SUPPLIED:
   (8)- 700mm L-RETAINER
   (1)- INSTRUCTION SHEET
4. COMPATIBLE WITH S2BRK12 AND S2BRK6.

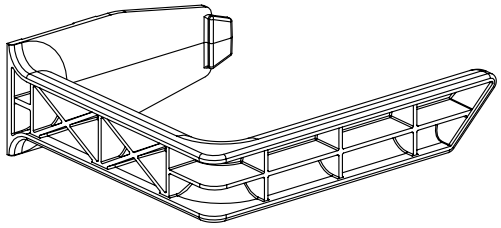

REV	DATE	BY	CHK	APR	DESCRIPTION	ECN
00A	7-11-13	PBS	RCHA	JDWE	RELEASED TO PRODUCTION	12V343ZM-DC

TITLE

S2LR L-RETAINER KIT

CUSTOMER DRAWING

ITEM REVISION NAME: 12V343ZM/00.PRT

DATASET FILE NAME: 12V343ZM_DC/00A.PRT

UNLESS OTHERWISE SPECIFIED, DIMENSIONAL TOLERANCES ARE:

INCHES		METRIC - MILLIMETER		ANGLE
X.X	+/- 0.03	X.	+/- 0.8	+/- 1°
X.XX	+/- 0.018	X.X	+/- 0.46	
X.XXX	+/- 0.007	X.XX	+/- 0.18	

THIRD ANGLE PROJECTION

MATERIAL/COLOR:

DRAWING NUMBER: 12V343ZM-DC

DRAWN BY	DATE	CHK	SCALE		SIZE
PBS	7-11-13	RCHA	NONE	SHT 1 OF 1	A