METZ CONNECT

We realize ideas

Connection systems for printed circuit boards

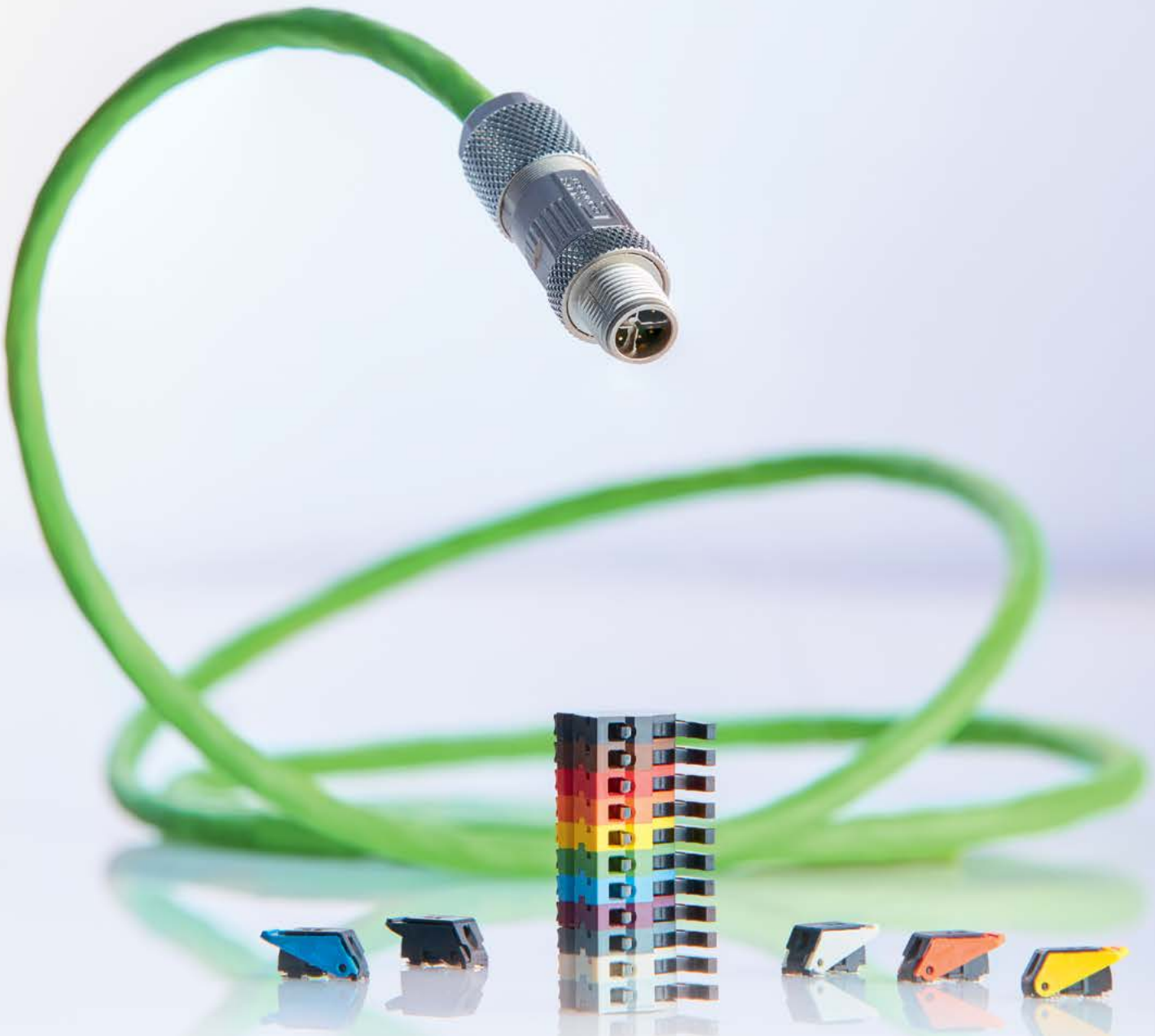

U | Contact

Innovative product systems – continuous connections

2015 | 2016

U | Contact

Connection systems
for printed circuit boards

The range of product catalogs from METZ CONNECT

By our range of product catalogs we really get things handy for you: concise information and highly interesting innovations across all our three product ranges **U|Contact, C|Logline** and **P|Cabling.**
Use our product range catalogs to learn more about our connection systems for printed circuit boards and devices, our intelligent system and switch cabinet components or our network cabling options.

U | Contact

Printed circuit board and device connection techniques

P | Cabling

Cabling solutions in the copper and fiber optic techniques for building and industrial cabling applications

C | Logline

Intelligent components for systems and switch cabinets

Table of contents

Dear business partners, dear customers,

For the last few years, the METZ CONNECT group has already had a globally oriented growth strategy, in which the activities and processes of the METZ CONNECT companies and organisations had been brought together on a global level. This has given METZ CONNECT energy from the synergistic effects and the more slimline processes for putting into practice our vision of a "Connectivity Specialist" who offers high-quality connection technology for the modern world of communications – from the printed circuit board to the Internet.

Especially against the background of a constantly increasing global networking the focus lies – besides a consistent appearance of METZ CONNECT – on a global availability of METZ CONNECT products. Everything is growing together and borders are losing their importance. Industry 4.0 and Internet of Things (IoT) are the current topics that move the markets. Complex supply and production chains in the industry. Convenient, safe and energy efficient types of building automation (Smart Living). A smart traffic infrastructure. All this requires intelligent networking of the devices and components involved. METZ CONNECT is ready to accompany you as a competent partner: with our know-how and our standardized and customized system solutions for a consistently safe and smooth data and signal flow.

The existing METZ CONNECT product range with its diversified solutions has been expanded further, and the new products have now been integrated into the catalog. We have already informed you in our last catalog about the deliberate integration of our connection technology, in which we have divided our core competences into three core ranges:

U|Contact stands for the connection technologies related to printed circuit boards and devices,
C|Logline stands for intelligent system and switch cabinet components and
P|Cabling stands for cabling systems in the copper and fiber optic technologies for building and industrial cabling applications.

Our consistent connection technology and competent advice for a wide range of application solutions and customer requirements makes us the ideal partner for your demanding requirements. Let us jointly approach the projects in equipment and system construction, structured building and industrial wiring or as proven partner in wholesale distribution and support you in your daily work.

Make also use of our Internet appearance rich in contents and easy to understand. Here you will find a current overview of all novelties, products, including product-relevant documentations, planning aids and mounting films.
Visit us at **www.metz-connect.com** and see for yourself.

We are happy to meet the challenges that await us and are looking forward to advise and assist you as a real partner by our technically and economically sound solutions!

Your

Jochen Metz
(Managing Partner)

Christian Metz
(Managing Partner)

and the entire team from METZ CONNECT.

www.metz-connect.com

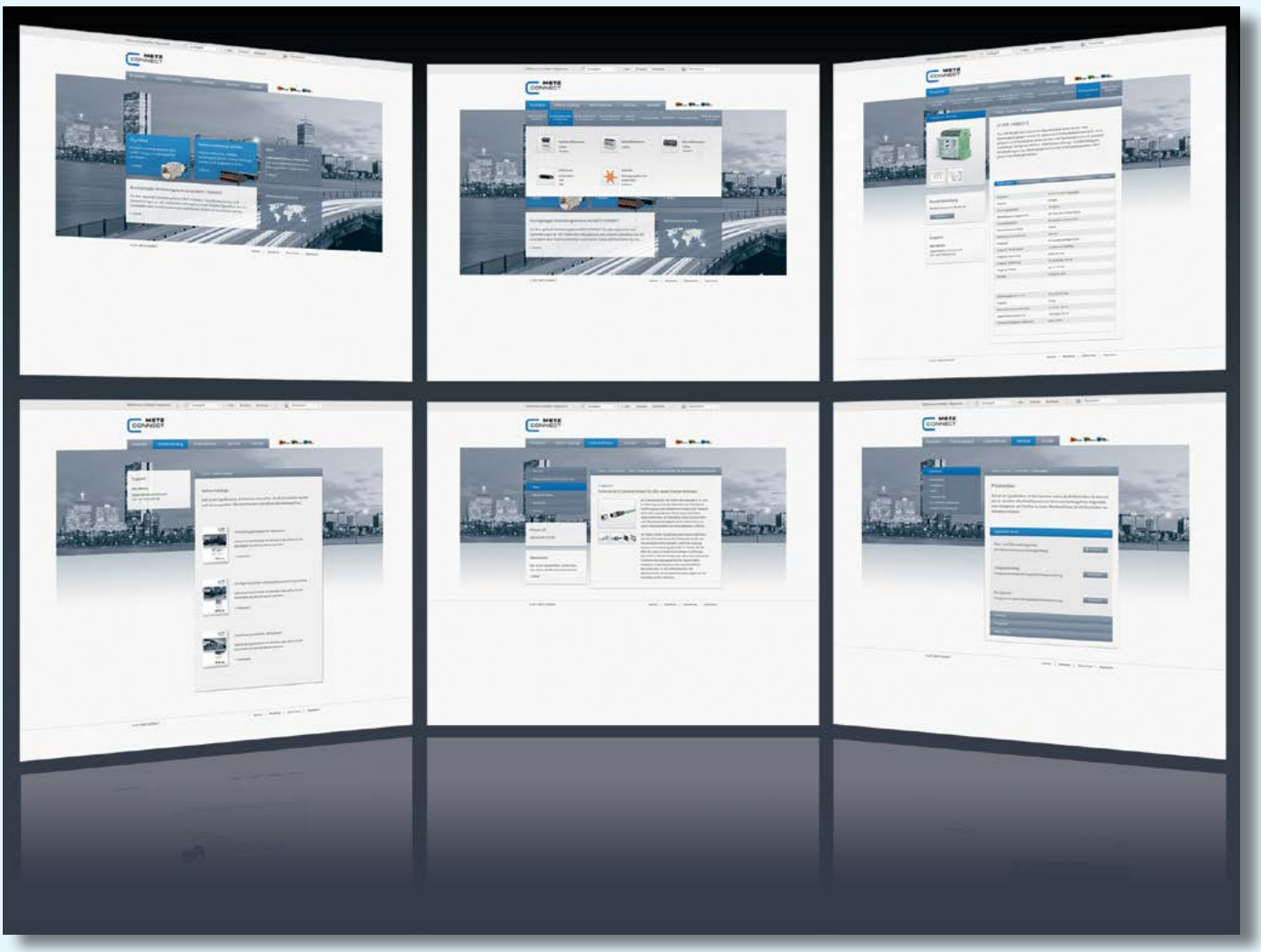

Detailed knowledge in a matter of seconds

Our product catalogs offer detailed product descriptions. But if you want to get even deeper into the details, visit us at www.metz-connect.com to get precise technical information within no time at all.

To do so, you may also use mobile tagging: Simply scan the shown QR-code using your smartphone and you will directly be connected to the METZ CONNECT homepage.

The most up-to-date connection to METZ CONNECT

Our website for even more efficiency

Ideal user-friendliness and non-stop availability, – our website www.metz-connect.com offers you the most recent news about METZ CONNECT and our products that you need for your daily business. And all this at a speed that will really impress you!

Our products
You may use different options to search for a product: the integrated navigation bar with its "Products" menu and concise structure, or the enterprise research option including its filter function or the online catalogs for all those, who wish to rely on our known product portfolio structure. A few clicks will lead you to the desired products and enable you to download all relevant documents such as data sheets, drawings or certificates. In the same time also compatible accessory components will be displayed.

Under "Services" a complete download overview will be shown presenting the entire download offer from information brochures and certificates up to test results and 3D-data.

Your contacts
Finding your right contact with METZ CONNECT, a distributor or special dealer is easy and comfortable using the country and zip-code search options under "Contact". You can also select here your global sales partner.

News(letter)
In our News area we inform you in real time on our product innovations, events and news.
In the same time you may want to subscribe to the METZ CONNECT newsletter. This will ensure that you will receive the latest information literally in real time directly on your computer.

Or just come and discover the web site of METZ CONNECT and play around with all its benefits – welcome to www.metz-connect.com!

Limitless connection

Globally, the importance of networks is ever increasing. The principles of universal, transparent information – from everywhere and at any time – and a communication with devices mapping different processes – define more and more our everyday life. And all this depends on reliable connection techniques.

To establish perfect connections is the core competence of METZ CONNECT. The METZ CONNECT group of companies offers a complete product range that stands out by its maximum system compatibility and continuity.

Our sophisticated portfolio and product approach in the market segments industrial electronics, data and communication technology and building services engineering guarantees smooth data flow from the printed circuit board through to connectors, cables and patch panels up to the infrastructural environment.

METZ CONNECT can thus guarantee a comprehensive, high-quality and transparent communication across all applications without system failures or performance losses. Next to the complete solutions, our group of companies offers also comprehensive services such as tailored product adaptations and new developments, qualified trainings, marketing support for our trade partners as well as a vast information program.

METZ CONNECT excels by quality – resulting from its intelligent company-internal value adds and perfectly harmonized processes from a product idea up to its delivery and commissioning. Our quality management system enables processes that are free from losses and protect the environment. An additional competitive advantage for our customers:
METZ CONNECT supplies complete solutions as one single provider.

To do so, we rely on our own stamping shops, plastic mold injection and tooling shops, testing laboratories, internal assembly units and experts in construction and programming of tools and production automation.

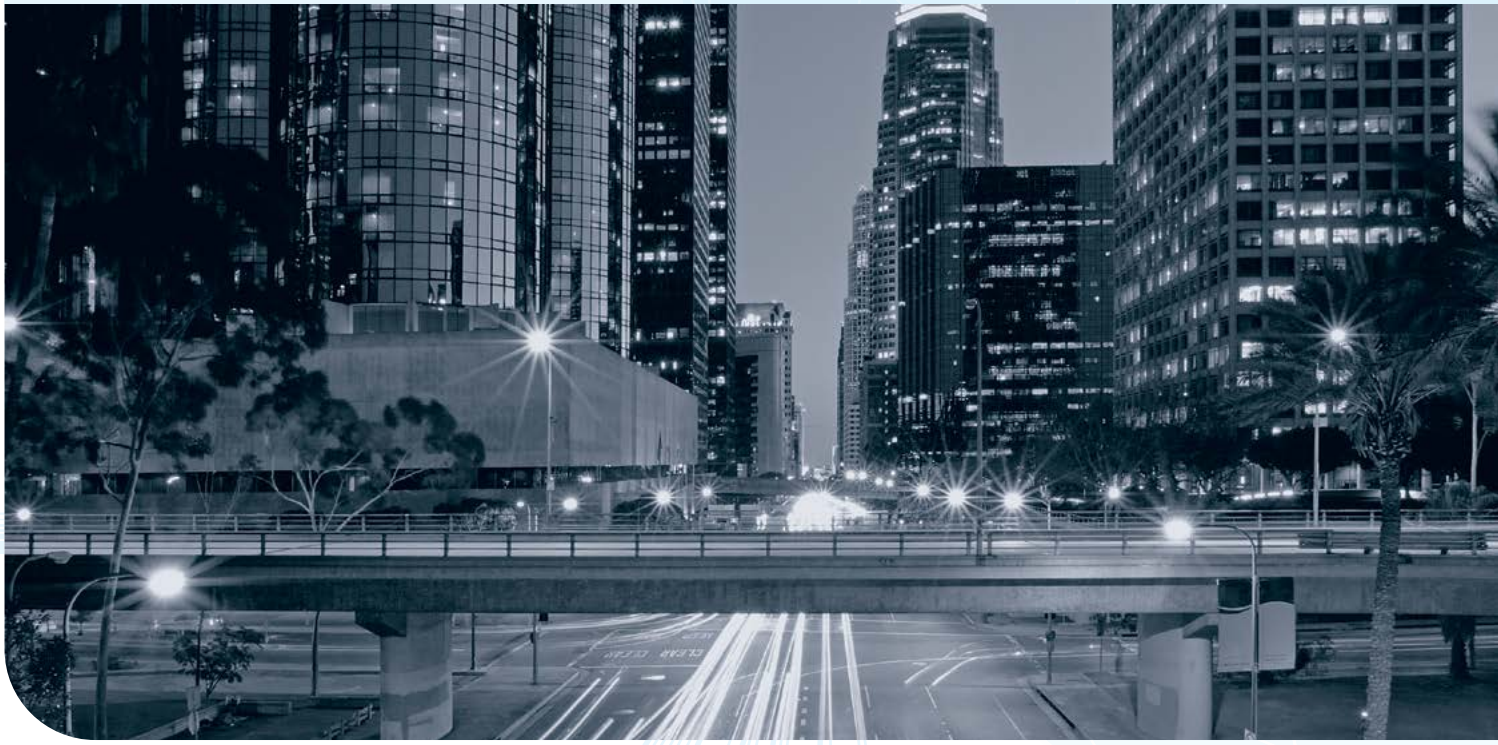

All from one single source – for your competitive advantage

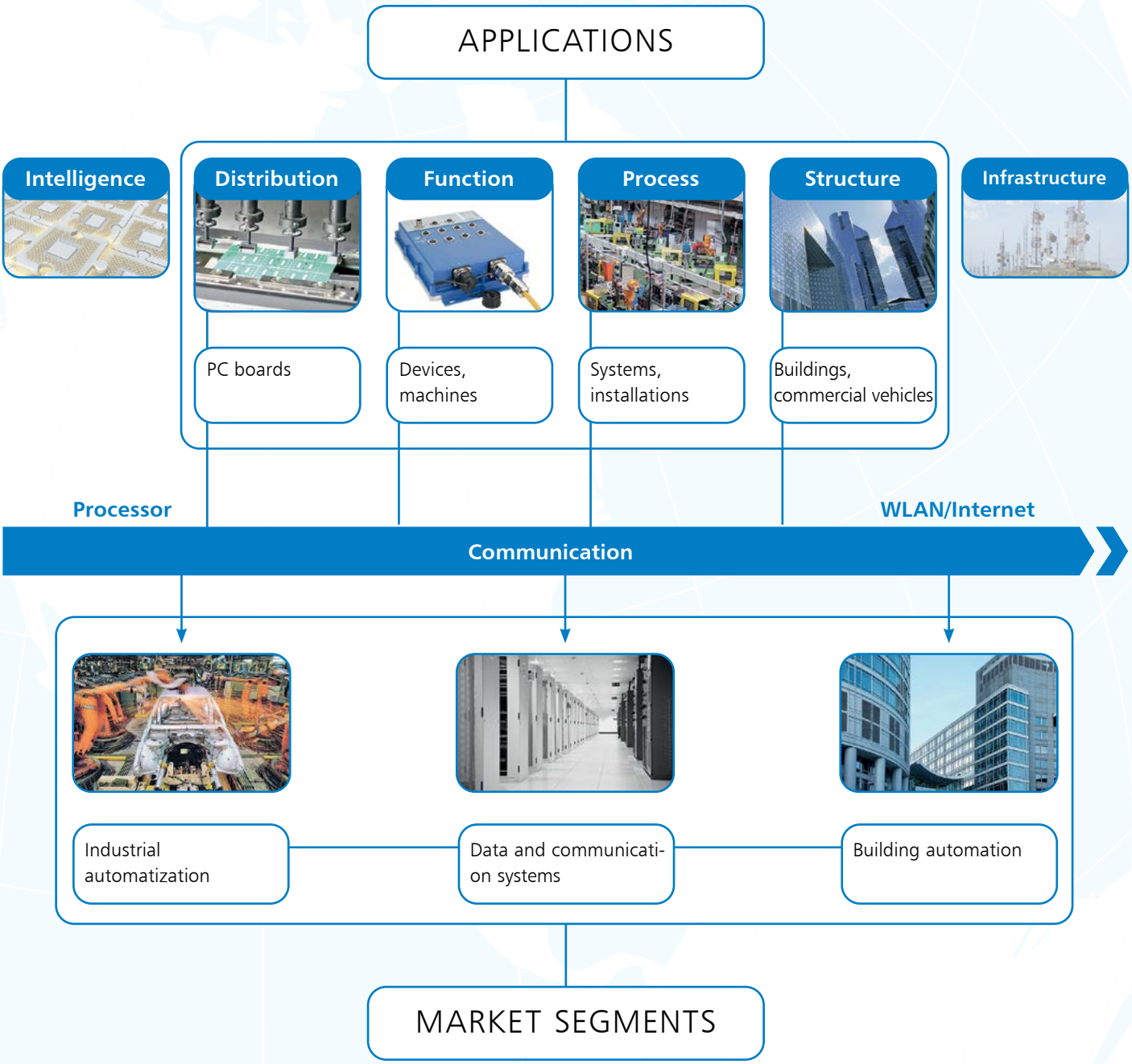

A product range, which connects everything

METZ CONNECT offers a universal range of products from printed circuit boards up to terminal devices. As your customer-oriented solutions partner, we subdivided our diversified, user-friendly and internationally standardized components and/or systems into three well structured arrays.

Under the name of **U|Contact** we bundle innovative connectivity products and solutions for printed circuit boards for a use with all modern techniques applied in the assembly of printed circuit boards. Products that are compatible with the standards of the markets as well as tailored product solutions for industrial controls and building automation are our core strengths in this field. This includes terminal blocks, board-to-board connectors as well as peripheral connectors (RJ, M12, USB) for different applications and protection classes.

P|Cabling includes highly specified, internationally standardized and powerful connection components and connection systems in the copper and fiber optic techniques. These solutions are used in structured building and industry cabling applications and for data centers. Convenient installation, maximum quality and perfect system compatibility across all important performance classes are the main characteristics of our modular inserts, connectors, wall outlets, patch panels, distributors, IP-protected plug connectors and patch and installation cables.

C|Logline stands for intelligent system components for a highly communicative and decentralized control in the application and product areas building automation, measurement and monitoring relays, interface modules, industrial relays and telecommunication.

In addition we offer cross range system solutions. Perfectly harmonized connection systems with a protection degree of IP67 facilitate fast, safe and flexible connections of devices using optical coupler, RJ45 or Ethernet M12 connections.

Customer-oriented solutions provider

U | Contact

Printed circuit board and device connection technology

Terminal blocks, pin headers

Connectors

Board-to-board

C | Logline

Intelligent components

Bus modules

Ethernet I/Os

Components for electrical cabinets

P | Cabling

Cabling systems Fiber Optic & copper

Connectors

Wall outlets, patch panels

Patch cords, lines

Innovative product systems – continuous connections

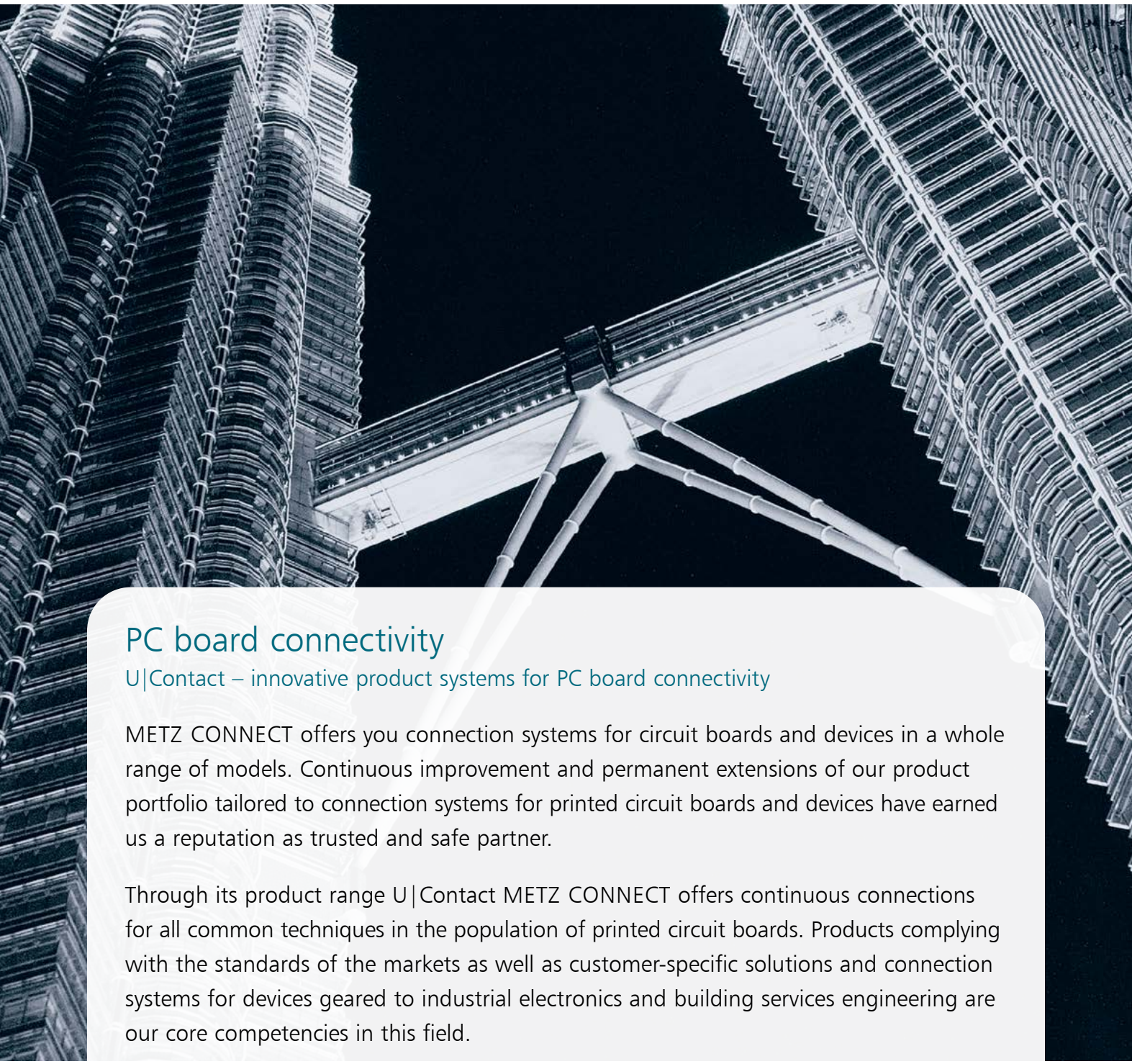

PC board connectivity

U|Contact – innovative product systems for PC board connectivity

METZ CONNECT offers you connection systems for circuit boards and devices in a whole range of models. Continuous improvement and permanent extensions of our product portfolio tailored to connection systems for printed circuit boards and devices have earned us a reputation as trusted and safe partner.

Through its product range U|Contact METZ CONNECT offers continuous connections for all common techniques in the population of printed circuit boards. Products complying with the standards of the markets as well as customer-specific solutions and connection systems for devices geared to industrial electronics and building services engineering are our core competencies in this field.

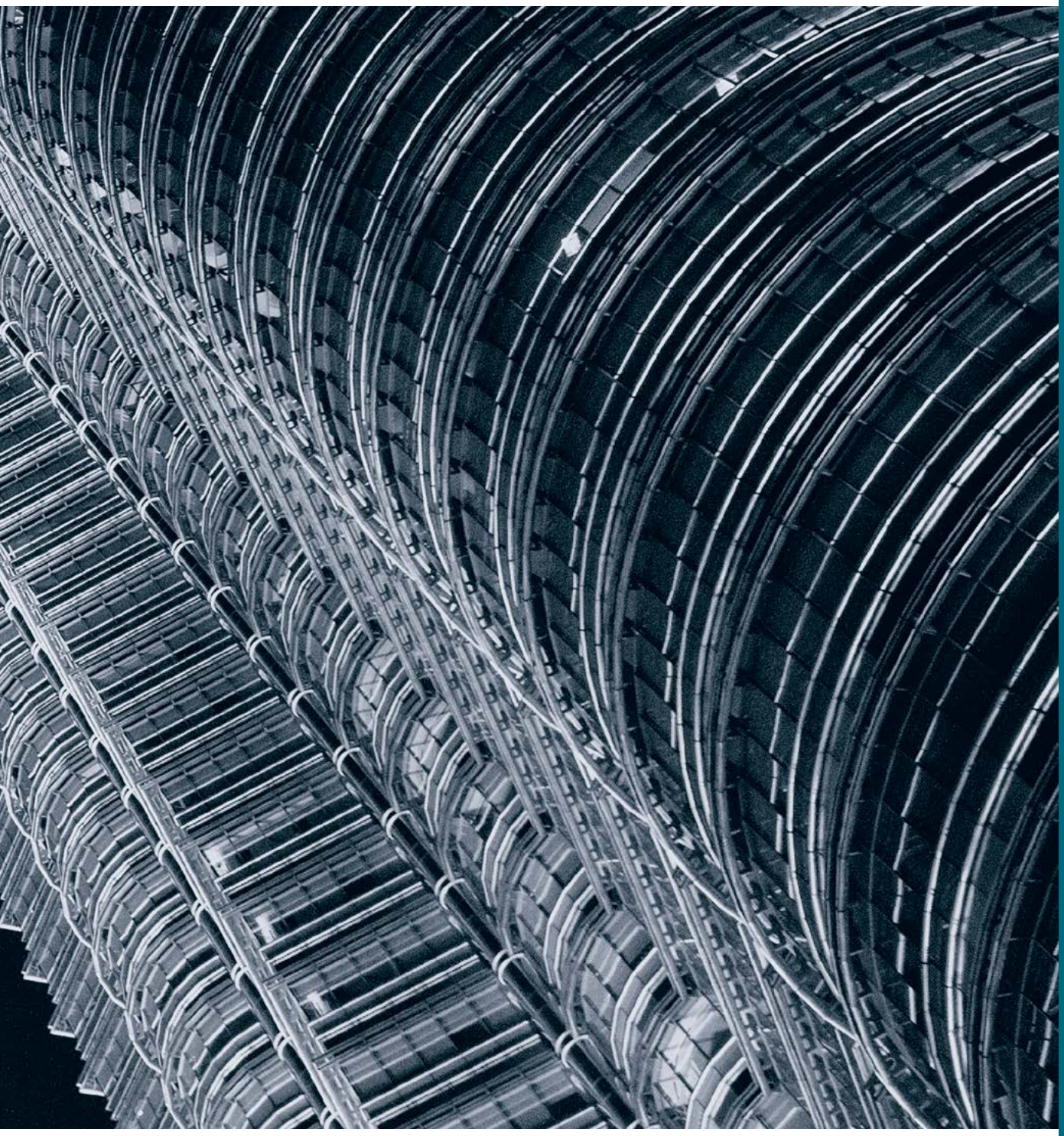

U|Contact product key

The product key for the U|Contact range of products offers customers a contemporary, uniform and easy-to-understand numbers system for all series of products.

The advantage: This product key describes the products according to their characteristics and thus creates transparency in the ordering and logistics processes.

Product families provide for a plain overview of the components and allow you to quickly identify the product properties such as fixation, center line, number of positions, etc. The variety of types has thus been reduced and combined to articles with identical features to make administration easier.

Brand

- **R** = Screw-type terminal blocks
- **P** = Pin headers
- **S** = Spring clamp terminal blocks
- **I** = Insulation displacement terminal blocks
- **F** = Female connectors

Color

- **B** = black
- **G** = green
- **R** = red
- **O** = orange
- **D** = gray
- **W** = white
- **Y** = yellow
- **N** = nature
- **H** = blue
- **E** = brown
- **V** = violet
- **X** = colorless
- **M** = multi-color

Option

- **N** = normal, wire feed non-codeable side
- **O** = normal, wire feed codeable side
- **F** = flange, wire feed non-codeable side
- **S** = flange, wire feed codeable side
- **U** = sequencing possible*, wire feed non-codeable side
- **V** = sequencing possible*, wire feed codeable side
- **C** = fittable*, wire feed non-codeable side
- **D** = fittable *, wire feed codeable side
- **L** = connection left-hand side
- **R** = connection right-hand side
- **T** = flat design
- **Z** = micro sd card slot
- **H** = two body material

Brand	Fixation	Type	Centerline (mm)	Number of poles	Structure	Color	Function	Option	Variants/ Taping
S	R	21	5	02	V	B	N	C	XXXX

Fixation

- **P** = pluggable (standard plug face)
- **W** = pluggable (alternative plug face for solderable THR headers according to JEDEC 20)
- **T** = THT solderable (wave soldering)
- **R** = THR solderable (pin in paste) according to JEDEC 20
- **M** = SMD/SMT (reflow soldering) according to JEDEC 20
- **C** = pluggable over compression-mount contacts
- **L** = THT solderable with compression-mount contacts

Centerline (mm)

- **1** = 2.50
- **2** = 2.54
- **3** = 3.50
- **4** = 3.81
- **5** = 5.00
- **6** = 5.08
- **7** = 7.50
- **8** = 7.62
- **9** = 10.00
- **A** = 10.16
- **B** = 1.27
- **C** = 2.00
- **D** = 4.00
- **E** = 12.00
- **F** = 14.00
- **G** = 12.50
- **H** = 15.00
- **J** = 7.00
- **K** = 15.24
- **L** = 6.35
- **M** = 12.70
- **N** = 9.52
- **O** = 19.04
- **Q** = 8.00
- **S** = special
- **W** = $0.13^2 – 0.82^2$
- **Y** = $0.82^2 – 1.3^2$

Structure

- **H** = horizontal = 90°
- **V** = vertical = 0° = 180°
- **D** = diagonal = 45° = 135°
- **I** = horizontal lamella
- **W** = vertical lamella
- **E** = diagonal lamella
- **L** = angled 30°–35°
- **U** = angled 55°–60°
- **S** = extraction aid**
- **F** = PB fixation**
- **R** = latches**
- **B** = plane bottom**
- **O** = highly insulated, horizontal**
- **P** = highly insulated, vertical**
- **M** = multi-pins**
- **C** = staggered pins**
- **G** = 90° horizontally rotated
- **T** = 0° = 180° vertically rotated

Function

- **N** = Standard = 1-row
- **W** = wire protection
- **L** = lift system
- **V** = variant
- **Z** = additional variant**
- **B** = shrouded, closed ends
- **O** = dovetail
- **E** = schrouded, open ends
- **H** = non-shrouded
- **F** = spring contact
- **D** = two-tier = 2-row
- **T** = 3-row
- **P** = Finger pusher
- **J** = Jumper

Variants/ Taping

- **G1** = tape 16 mm
- **G2** = tape 32 mm
- **G3** = tape 44 mm
- **G4** = tape 56 mm
- **G5** = tape 72 mm
- **G6** = tape 88 mm
- **G7** = tape 24 mm
- **G8** = tape 104 mm
- **T1** = tube

* Sequencing possible means the mechanical sequencing without loss of poles (by dovetails) | Fittable stands for a loose sequencing without loss of poles (without dovetails)

** Only applicable if two variants are available.

U | Contact

- **PC board terminal blocks**
  - Spring clamp terminal blocks
    - solder-able
      - Centerline in mm: 2.50, 2.54, 3.50, 3.81, 5.00, 5.08, 7.50, 7.62, 10.00, Single poles
    - plug-gable
      - Centerline in mm: 2.50, 3.50, 3.81, 5.00, 5.08, 10.00, 10.16
  - Screw-type terminal blocks
    - solder-able
      - Centerline in mm: 3.50, 3.81, 5.00, 5.08, 6.35, 7.50, 9.52, 10.00, 10.16, Single poles
    - plug-gable
      - Centerline in mm: 3.50, 3.81, 5.00, 5.08, 7.62, 10.00, 10.16
  - Insulation displace-ment terminals
    - solder-able
      - Centerline in mm: 3.50
- **Pin headers and female connectors**
  - Pin headers
    - solder-able
      - Centerline in mm: 2.50, 3.50, 3.81, 5.00, 5.08, 7.62, 10.00, 10.16
    - THR
      - Centerline in mm: 3.50, 3.81, 5.00, 5.08
    - SMT
      - Centerline in mm: 3.50, 5.00
  - Female connectors
    - solder-able
      - Centerline in mm: 3.50, 5.00
- **Board-to-board connectors**
  - Pin headers
    - THR
      - Centerline in mm: 1.27, 2.00, 2.54
    - SMT
      - Centerline in mm: 1.27, 2.00, 2.54
  - Female connectors
    - THR
      - Centerline in mm: 1.27, 2.00, 2.54
    - SMT
      - Centerline in mm: 1.27, 2.00, 2.54
- **PCB jacks**
  - RJ45 device connection
    - shielded
  - RJ45 unshielded
    - Single port horizontal
    - Single port vertical
    - Multiport horizontal
  - RJ45 shielded
    - Single port horizontal
    - Single port vertical
    - Multiport horizontal
    - Multiport vertical
  - RJ45 LED unshielded
    - Single port horizontal
    - Single port vertical
    - Multiport horizontal
    - Multiport vertical
  - RJ45 LED unshielded
    - Single port horizontal
    - Single port vertical
    - Multiport horizontal
  - RJ45 plug
    - Single port vertical
  - RJ12 unshielded
    - Single port horizontal
    - Single port vertical
    - Multiport horizontal
    - Multiport vertical
  - RJ12 shielded
    - Single port horizontal
  - USB
    - Type A vertical
    - Type A horizontal
    - Type B horizontal
    - Type B vertical
    - Plug Micro Type B horizontal
  - Ethernet M12
    - Jacks D-coded
    - Jacks X-coded
- **Accessories**
  - Terminal blocks
    - Mounting flanges screwable
    - Mounting flanges latchable
    - Coding pins without loss of poles
    - Coding pins with loss of poles
    - Other
  - Pin headers
    - LED light transmitter
    - Coding pins without loss of poles
  - Screwdriver
    - Blade slotted

PC board terminal blocks

PC board terminal blocks

U | Contact

PC board terminal blocks

Tried and tested – METZ CONNECT has successfully marketed terminal blocks for printed circuit boards worldwide for decades. The portfolio incorporates products for signal and data streams, medium control streams and network connection terminals and output terminals.

Complete – a permanent expansion of the proven range as well as constant improvement and further development of our products are the declared goal in order to be able to offer you complete and high-quality solutions for your applications.

All from one single source – regardless of what you need in detail – products that result from joint developments, from design-in concepts based on existing or modified products or catalogs items – we will fully meet your demands in terms of PC board connectivity.

Future-oriented – in line with the market trends, our focus is on products that are also suitable for automated production. Whether it's designs for through-hole-reflow (THR) or surface mount technology (SMT) – we have the solution for you. We do of course also supply these products in the "Tape & Reel" packaging required for automation.

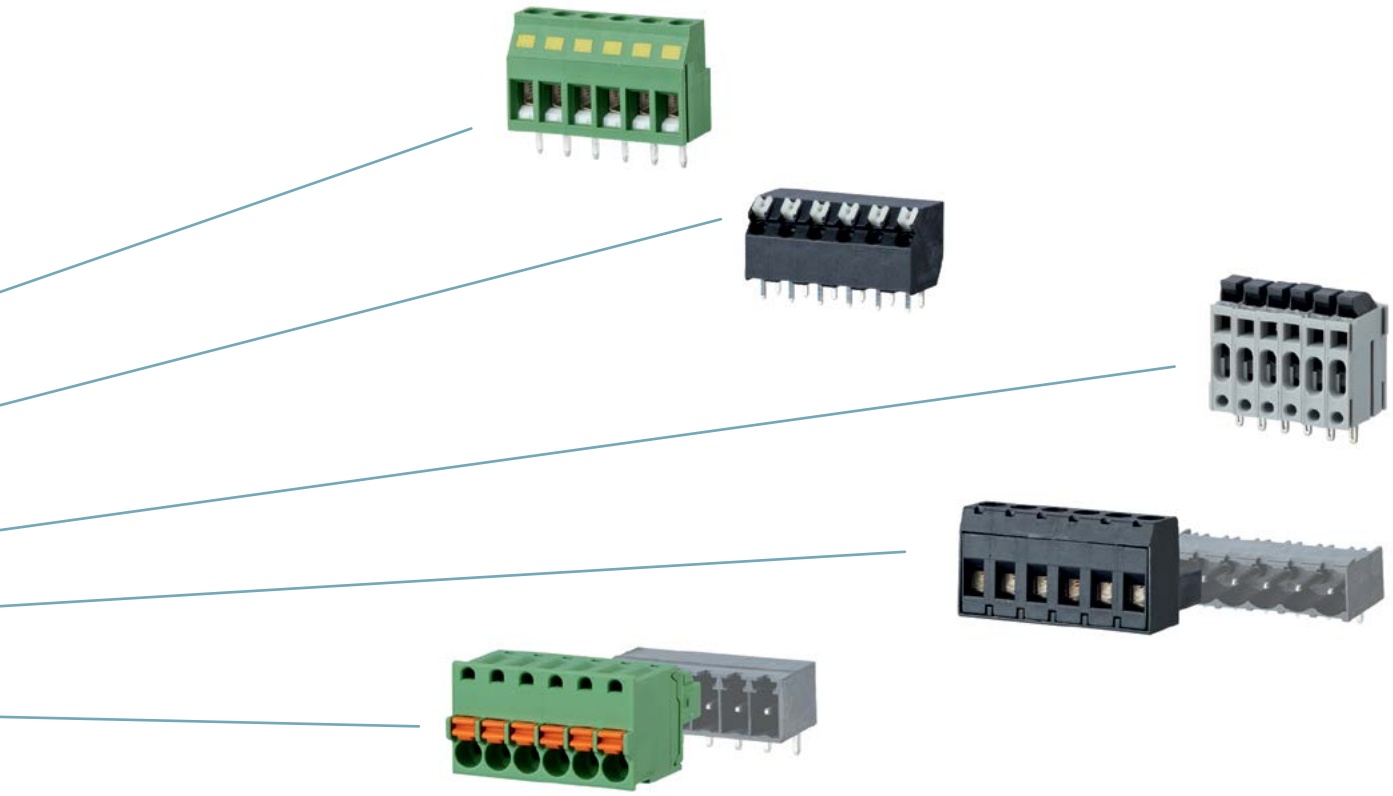

Spring clamp terminal blocks

Design specification

The **product family** consists of terminal blocks that are based on a spring clamp connection.
By spring clamp connection, we mean an electrical connection that is created by clamping an individual of an individual, isolated conductor using a spring. It is suitable for solid wires and multi-wire strands of 0.08 – 2.5 mm² rated section and enables:

- direct terminal without pre-treatment of conductor
- direct terminal with splice protection
- indirect terminal via wire end sleeve or pin cable shoe

Spring clamp terminal block with cage clamp (with and without eccentric lever)

- with eccentric lever open terminal chamber in the delivery status
- with eccentric lever tool-less connection of the conductors
- very short assembly times
- the closed power system inside the terminal block prevents pressure from being applied onto the circuit board at the time of connection
- gas-proof connection at the terminal point
- sequenceability of different colors
- can be installed in the housing
- the spring adapts automatically to changed conductor sections

Spring clamp terminal block with leaf spring

- solid wires can be connected by simple insertion without actuation
- stranded wires and thin solid wires are connected using a standard screwdriver
- short assembly times
- gas-proof connection at the terminal point
- sequenceability of different colors
- can be installed in the housing
- the spring adapts automatically to changed conductor sections

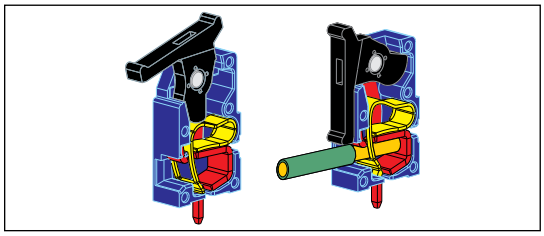

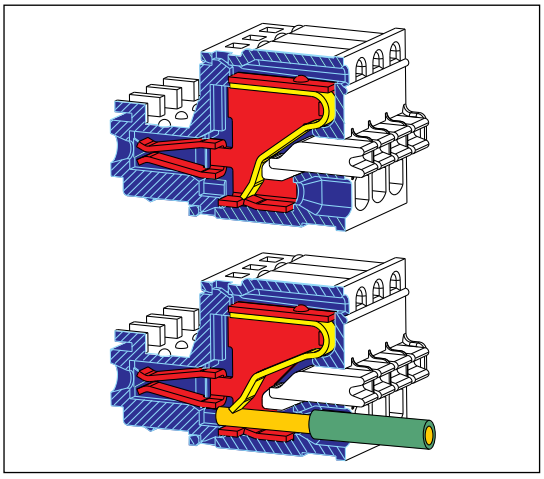

Reflow-compatible components THR SMD

METZ CONNECT offers a wide range of spring clamp terminal blocks in reflow-compatible designs. The demand for reflow-compatible components is constantly growing thanks to ever increasing degrees of automation in the production processes.

"Tape & Reel" is the name given to a taped form of packaging. The aim of this packaging variant is to automate production processes. The components are packed in a blister tape and welded with a protective foil. This tape is then wound round a reel. Taping corresponds to DIN EN 60286.

U | Contact

Spring clamp terminal blocks

Printing options
We offer individual printing of your terminal blocks. Figures or symbols, anti-clockwise or clockwise, legible or bottom up depending on the technical feasibility. Ink-jet print, pad printing and hot stamping are available as methods. Design your individual terminal block with us.

Color options
You can order the terminal blocks in a variety of sizes and also often vary the colors within a terminal block, if required. This is for instance helpful in housing integration to achieve an optically attractive overall picture or to use this as a further coding option. We would be pleased to advise you on the possible combinations.

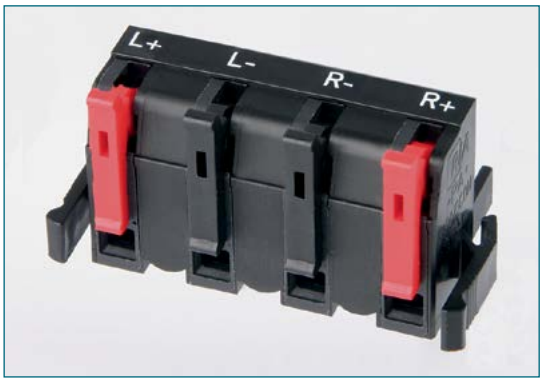

Product key spring clamp terminal blocks

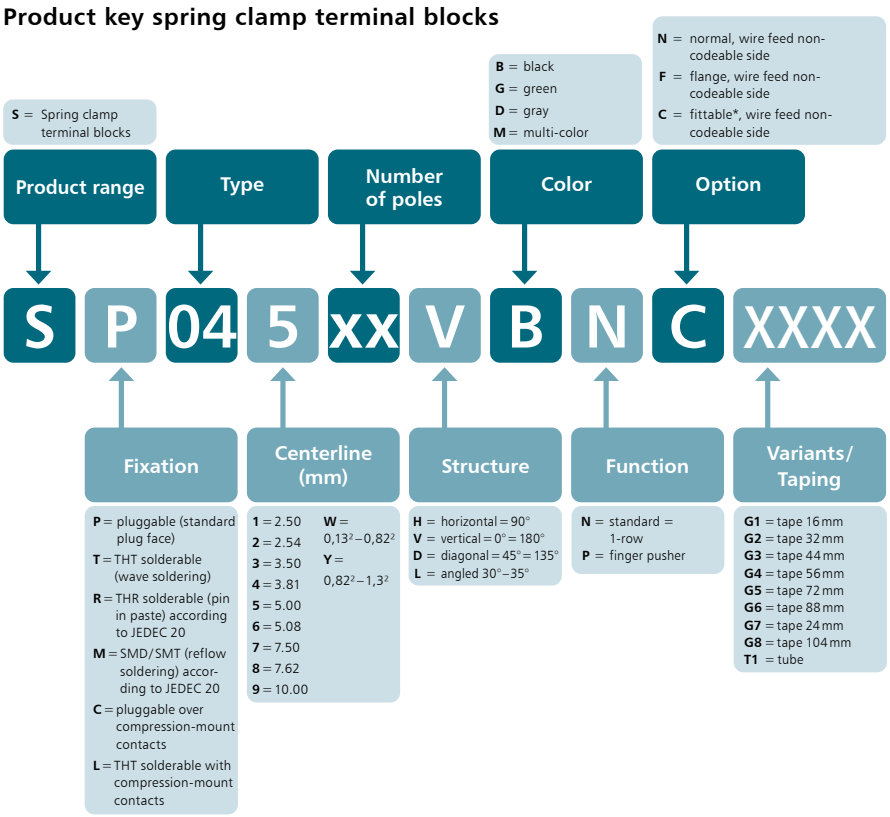

* Fittable stands for loose sequencing without loss of poles (without dovetails).

Symbol Definition

Guiding icons

	Spring clamp terminal block		Wire protector
	IDC terminal block		modular
	Screw type terminal block		Pin header for vertical mounting
	Pin header		Shrouded pin header for vertical mounting
	Female connector		Pin header with open ends for vertical mounting
M12	Ethernet M12		Pin header with closed ends for vertical mounting
	solderable		Pin header for horizontal mounting
	pluggable		Shrouded pin header for horizontal mounting
3.50	Centerline		Pin header with open ends for horizontal mounting
	Wire entry 90°		Pin header with closed ends for horizontal mounting
	Diagonal wire entry	THR	designed for THR
	Wire entry 0°	SMD	designed for SMT
Lift	Lift system		Tape & Reel possible

* Approval pending

Product family	Pole size		Color	Option			
ST06	1	xx	H	D	N	N	*(AST061)
Centerline		Design		Function			*old product name

- spring clamp terminal block, solderable
- centerline 2.50 mm, direction of connection 90°
- color gray
- without eccentric lever

Technical data

V / A / AWG 130 / 10 / 28 - 20

0.5 mm² 130 V / 6 A / T60

Overvoltage category	III	III	II
Pollution degree	3	2	2
Rated voltage	80 V	320 V	320 V
Rated test voltage	2.5 kV	2.5 kV	2.5 kV
Insulating material class	CTI 600		
Rated wiring solid wire	0.2 - 0.5 mm²		
Rated wiring stranded wire	0.2 - 0.5 mm²		
Rated wiring solid wire	AWG 28 - 20		
Rated wiring stranded wire	AWG 28 - 20		
Clearance and creepage distances	1.7 mm		
Solder pin dimension	0.8 x 0.8 mm		
Recommended pc board hole dia.	ø 1.3 mm		
Solder pin length	5 mm		
Protection category according to IEC 60529	IP 20		
Min. insul. strip length	6 mm		
Color	gray		

Dimensional drawing

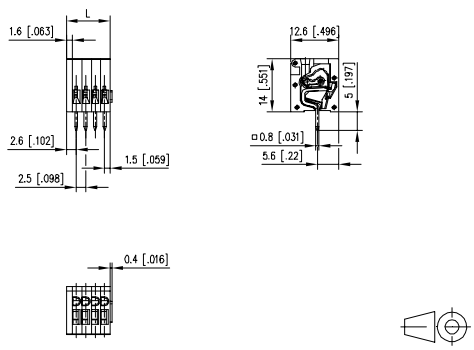

L = (Pole size - 1) * centerline + 4.1 mm (0.161 in.)

P/N

AST061 ☐

Complete the part number by adding the pole size.

	02	03	04	05	06	07	08
09	10	11	12	13	14	15	16
17	18	19	20	21	22	23	24

(Information: page 21)

Standard pole sizes

Product family	Pole size		Color	Option			
ST02	1	xx	H	D	N	N	*(AST021)
Centerline		Design		Function			*old product name

- spring clamp terminal block, solderable
- centerline 2.50 mm, direction of connection 90°
- color gray
- eccentric lever

Technical data

V / A / AWG 150 / 8 / 28 - 20

0.5 mm² 130 V / 6 A / T60

Overvoltage category	III	III	II
Pollution degree	3	2	2
Rated voltage	80 V	320 V	320 V
Rated test voltage	2.5 kV	2.5 kV	2.5 kV
Insulating material class	CTI 600		
Rated wiring solid wire	0.2 - 0.5 mm²		
Rated wiring stranded wire	0.2 - 0.5 mm²		
Rated wiring solid wire	AWG 28 - 20		
Rated wiring stranded wire	AWG 28 - 20		
Clearance and creepage distances	1.7 mm		
Solder pin dimension	0.8 x 0.8 mm		
Recommended pc board hole dia.	ø 1.3 mm		
Solder pin length	5 mm		
Protection category according to IEC 60529	IP 20		
Min. insul. strip length	6 mm		
Color	gray		

Dimensional drawing

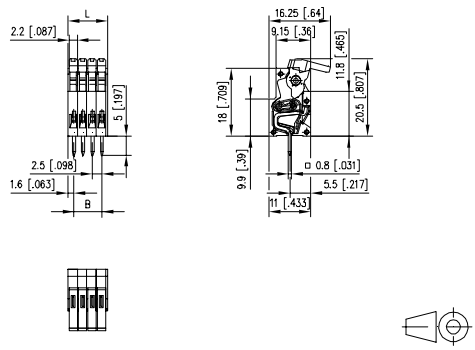

L = (Pole size - 1) * centerline + 3 mm (0.118 in.)

P/N

AST021 ☐

Complete the part number by adding the pole size.

	02	03	04	05	06	07	08
09	10	11	12	13	14	15	16
17	18	19	20	21	22	23	24

(Information: page 21)

Standard pole sizes

Product family	Pole size	Color	Option	
ST041	1	xx	DDNN	*(AST041)
Centerline		Design	Function	*old product name

- spring clamp terminal block, solderable, double solder pins
- centerline 2.50 mm, direction of connection 45°
- color gray
- eccentric lever

Technical data

V / A / AWG 150 / 8 / 28 - 18

0.5 mm² 130 V / 6 A / T60

Overvoltage category	III	III	II
Pollution degree	3	2	2
Rated voltage	80 V	320 V	320 V
Rated test voltage	2.5 kV	2.5 kV	2.5 kV
Insulating material class	CTI 600		
Rated wiring solid wire	0.2 - 0.5 mm²		
Rated wiring stranded wire	0.2 - 0.5 mm²		
Rated wiring solid wire	AWG 28 - 18		
Rated wiring stranded wire	AWG 28 - 18		
Clearance and creepage distances	1.7 mm		
Solder pin dimension	2 x 0.8 x 0.5 mm		
Recommended pc board hole dia.	ø 1.3 mm		
Solder pin length	5 mm		
Protection category according to IEC 60529	IP 20		
Min. insul. strip length	6 mm		
Color	gray		

Dimensional drawing

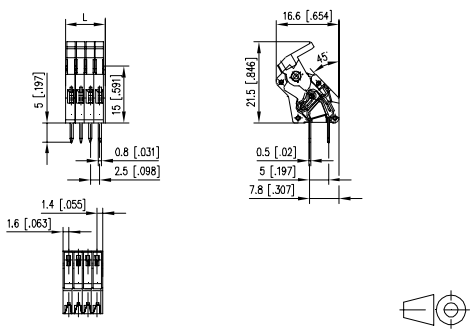

L = (Pole size - 1) * centerline + 3 mm (0.118 in.)

P/N

AST041 ☐

Complete the part number by adding the pole size.

	02	03	04	05	06	07	08
09	10	11	12	13	14	15	16
17	18	19	20	21	22	23	24

(Information: page 21)

■ **Standard pole sizes**

Product family	Pole size	Color	Option	
ST07	2xx	H	GNN	*(AST072)
Centerline	Design	Function		*old product name

- spring clamp terminal block, solderable, double solder pins
- centerline 2.54 mm, direction of connection 90°
- color green
- push-button

Technical data

cULus V / A / AWG 150 / 6 / 26 - 20

SEV 0.5 mm² 130 V / 6 A / T60

Overvoltage category	III	III	II
Pollution degree	3	2	2
Rated voltage	160 V	400 V	400 V
Rated test voltage	2.5 kV	2.5 kV	2.5 kV
Insulating material class	CTI 600		
Rated wiring solid wire	0.2 - 0.5 mm²		
Rated wiring stranded wire	0.2 - 0.5 mm²		
Rated wiring solid wire	AWG 26 - 20		
Rated wiring stranded wire	AWG 26 - 20		
Clearance and creepage distances	2 mm		
Solder pin dimension	2 x 0.8 x 0.5 mm		
Recommended pc board hole dia.	ø 1.1 mm		
Solder pin length	3.2 mm		
Protection category according to IEC 60529	IP 20		
Min. insul. strip length	10 mm		
Color	green		

Dimensional drawing

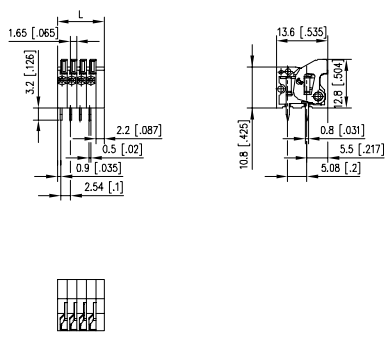

L = (Pole size - 1) * centerline + 4.74 mm (0.187 in.)

P/N
AST072 ☐

Complete the part number by adding the pole size.

	02	03	04	05	06	07	08
09	10	11	12	13	14	15	16
17	18	19	20	21	22	23	24

(Information: page 21)

Standard pole sizes

Product family	Pole size	Color	Option	
ST07	2xx	V	GNN	*(AST082)
Centerline	Design	Function		*old product name

- spring clamp terminal block, solderable, double solder pins
- centerline 2.54 mm, direction of connection vertical 0°
- color green
- push-button

Technical data

cULus V / A / AWG 150 / 6 / 26 - 20

SEV 0.5 mm² 130 V / 6 A / T60

Overvoltage category	III	III	II
Pollution degree	3	2	2
Rated voltage	160 V	400 V	400 V
Rated test voltage	2.5 kV	2.5 kV	2.5 kV
Insulating material class	CTI 600		
Rated wiring solid wire	0.2 - 0.5 mm²		
Rated wiring stranded wire	0.2 - 0.5 mm²		
Rated wiring solid wire	AWG 26 - 20		
Rated wiring stranded wire	AWG 26 - 20		
Clearance and creepage distances	2 mm		
Solder pin dimension	2 x 0.8 x 0.5 mm		
Recommended pc board hole dia.	ø 1.1 mm		
Solder pin length	3.48 mm		
Protection category according to IEC 60529	IP 20		
Min. insul. strip length	10 mm		
Color	green		

Dimensional drawing

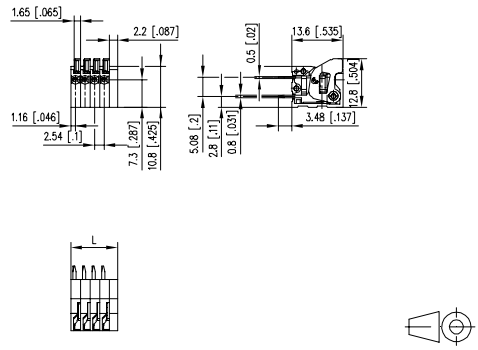

L = (Pole size - 1) * centerline + 4.74 mm (0.187 in.)

P/N
AST082 ☐

Complete the part number by adding the pole size.

	02	03	04	05	06	07	08
09	10	11	12	13	14	15	16
17	18	19	20	21	22	23	24

(Information: page 21)

Standard pole sizes

Product family	Pole size	Color	Option
SR213	xx	H	BNC

*(AST223)

Centerline / Design / Function

*old product name

- spring clamp terminal block, THR solderable, double solder pins
- centerline 3.50 mm, direction of connection 90°
- fittable without loss of poles
- color black
- Tape & Reel packaging
- push-button

Technical data

V / A / AWG 150 / 10 / 28 - 16

1.5 mm² 130 V / 17.5 A / T60

Overvoltage category	III	III	II
Pollution degree	3	2	2
Rated voltage	160 V	400 V	400 V
Rated test voltage	2.5 kV	2.5 kV	2.5 kV
Insulating material class	CTI 600		
Rated wiring solid wire	0.08 - 1.5 mm²		
Rated wiring stranded wire	0.08 - 1.5 mm²		
Rated wiring solid wire	AWG 28 - 16		
Rated wiring stranded wire	AWG 28 - 16		
Clearance and creepage distances	2 mm		
Solder pin dimension	2 x 0.4 x 0.8 mm		
Recommended pc board hole dia.	ø 1.2 mm		
Solder pin length	3.45 mm		
Protection category according to IEC 60529	IP 20		
Min. insul. strip length	8.5 mm		
Color	black		

Dimensional drawing

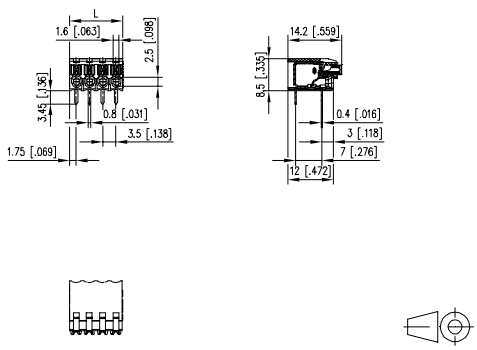

L = (Pole size - 1) * centerline + 3.5 mm (0.138 in.)

P/N

AST223 ☐

Complete the part number by adding the pole size.

	02	03	04	05	06	07	08
09	10	11	12				

(Information: page 21)

Standard pole sizes

Product family	Pole size	Color	Option
SR213	xx	H	BPC

Centerline / Design / Function

- spring clamp terminal block, THR solderable, double solder pins
- centerline 3.50 mm, direction of connection 90°
- fittable without loss of poles
- color black
- Tape & Reel packaging
- finger push-button

Technical data

V / A / AWG 150 / 10 / 28 - 16

1.5 mm² 130 V / 17.5 A / T60

Overvoltage category	III	III	II
Pollution degree	3	2	2
Rated voltage	160 V	400 V	400 V
Rated test voltage	2.5 kV	2.5 kV	2.5 kV
Insulating material class	CTI 600		
Rated wiring solid wire	0.08 - 1.5 mm²		
Rated wiring stranded wire	0.08 - 1.5 mm²		
Rated wiring solid wire	AWG 28 - 16		
Rated wiring stranded wire	AWG 28 - 16		
Clearance and creepage distances	2 mm		
Solder pin dimension	2 x 0.4 x 0.8 mm		
Recommended pc board hole dia.	ø 1.2 mm		
Solder pin length	3.45 mm		
Protection category according to IEC 60529	IP 20		
Min. insul. strip length	8.5 mm		
Color	black		

Dimensional drawing

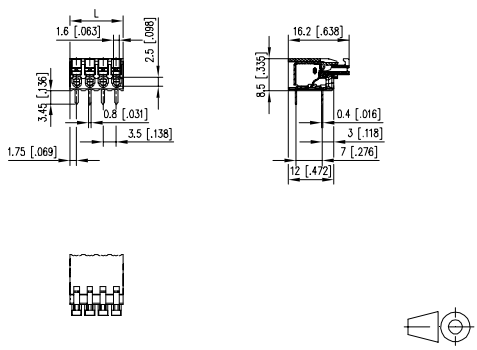

L = (Pole size - 1) * centerline + 3.5 mm (0.138 in.)

P/N

SR213 ☐ HBPC

Complete the part number by adding the pole size.

	02	03	04	05	06	07	08
09	10	11	12				

(Information: page 21)

Standard pole sizes

Product family | Pole size | Color | Option

SR213xxDBNC *(AST233)

Centerline | Design | Function | *old product name

- spring clamp terminal block, THR solderable, double solder pins
- centerline 3.50 mm, direction of connection 45°
- fittable without loss of poles
- color black
- Tape & Reel packaging
- push-button

Technical data

cULus V / A / AWG 150 / 10 / 28 - 16

SEV 1.5 mm² 130 V / 17.5 A / T60

Overvoltage category	III	III	II
Pollution degree	3	2	2
Rated voltage	160 V	400 V	400 V
Rated test voltage	2.5 kV	2.5 kV	2.5 kV
Insulating material class	CTI 600		
Rated wiring solid wire	0.08 - 1.5 mm²		
Rated wiring stranded wire	0.08 - 1.5 mm²		
Rated wiring solid wire	AWG 28 - 16		
Rated wiring stranded wire	AWG 28 - 16		
Clearance and creepage distances	2.2 mm		
Solder pin dimension	2 x 0.4 x 0.8 mm		
Recommended pc board hole dia.	ø 1.2 mm		
Solder pin length	3.5 mm		
Protection category according to IEC 60529	IP 20		
Min. insul. strip length	8.5 mm		
Color	black		

Dimensional drawing

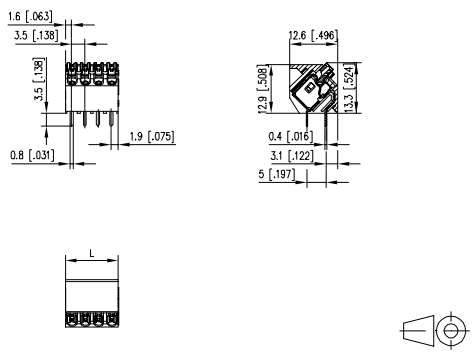

L = (Pole size - 1) * centerline + 3.5 mm (0.138 in.)

P/N

AST233 ☐

Complete the part number by adding the pole size.

	02	03	04	05	06	07	08
09	10	11	12				

(Information: page 21)

Standard pole sizes

* Approval pending

Product family | Pole size | Color | Option

SR213xxDBPC

Centerline | Design | Function

- spring clamp terminal block, THR solderable, double solder pins
- centerline 3.50 mm, direction of connection 45°
- fittable without loss of poles
- color black
- Tape & Reel packaging
- finger push-button

Technical data

cULus* V / A / AWG 130 / 10 / 28 - 16

SEV 1.5 mm² 130 V / 17.5 A / T60

Overvoltage category	III	III	II
Pollution degree	3	2	2
Rated voltage	160 V	400 V	400 V
Rated test voltage	2.5 kV	2.5 kV	2.5 kV
Insulating material class	CTI 600		
Rated wiring solid wire	0.08 - 1.5 mm²		
Rated wiring stranded wire	0.08 - 1.5 mm²		
Rated wiring solid wire	AWG 28 - 16		
Rated wiring stranded wire	AWG 28 - 16		
Clearance and creepage distances	2.2 mm		
Solder pin dimension	2 x 0.4 x 0.8 mm		
Recommended pc board hole dia.	ø 1.2 mm		
Solder pin length	3.5 mm		
Protection category according to IEC 60529	IP 20		
Min. insul. strip length	8.5 mm		
Color	black		

Dimensional drawing

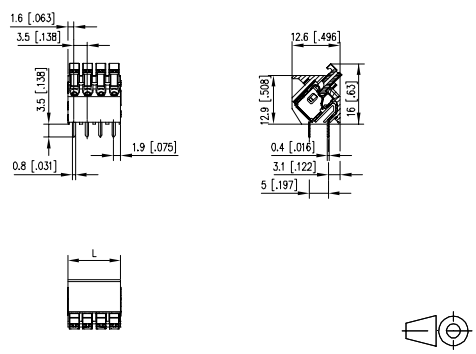

L = (Pole size - 1) * centerline + 3.5 mm (0.138 in.)

P/N

SR213 ☐ **DBPC**

Complete the part number by adding the pole size.

	02	03	04	05	06	07	08
09	10	11	12				

(Information: page 21)

Standard pole sizes

Product family | Pole size | Color | Option

SR213xxVBNC *(AST213)

Centerline | Design | Function | *old product name

- spring clamp terminal block, THR solderable, double solder pins
- centerline 3.50 mm, direction of connection vertical 0°
- fittable without loss of poles
- color black
- Tape & Reel packaging
- push-button

Technical data

V / A / AWG 150 / 10 / 28 - 16

1.5 mm² 130 V / 17.5 A / T60

Overvoltage category	III	III	II
Pollution degree	3	2	2
Rated voltage	160 V	400 V	400 V
Rated test voltage	2.5 kV	2.5 kV	2.5 kV
Insulating material class	CTI 600		
Rated wiring solid wire	0.08 - 1.5 mm²		
Rated wiring stranded wire	0.08 - 1.5 mm²		
Rated wiring solid wire	AWG 28 - 16		
Rated wiring stranded wire	AWG 28 - 16		
Clearance and creepage distances	2 mm		
Solder pin dimension	2 x 0.4 x 0.8 mm		
Recommended pc board hole dia.	ø 1.2 mm		
Solder pin length	3.5 mm		
Protection category according to IEC 60529	IP 20		
Min. insul. strip length	8.5 mm		
Color	black		

Dimensional drawing

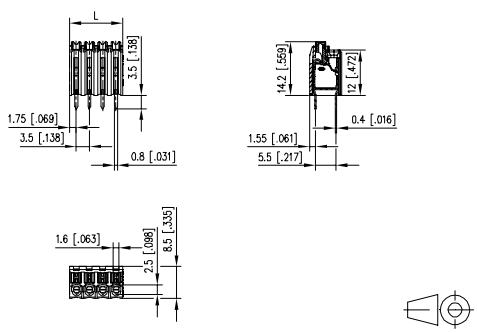

L = (Pole size - 1) * centerline + 3.5 mm (0.138 in.)

P/N

AST213 ☐

Complete the part number by adding the pole size.

	02	03	04	05	06	07	08
09	10	11	12				

(Information: page 21)

Standard pole sizes

Product family | Pole size | Color | Option

SR213xxVBPC

Centerline | Design | Function

- spring clamp terminal block, THR solderable, double solder pins
- centerline 3.50 mm, direction of connection vertical 0°
- fittable without loss of poles
- color black
- Tape & Reel packaging
- finger push-button

Technical data

V / A / AWG 150 / 10 / 28 - 16

1.5 mm² 130 V / 17.5 A / T60

Overvoltage category	III	III	II
Pollution degree	3	2	2
Rated voltage	160 V	400 V	400 V
Rated test voltage	2.5 kV	2.5 kV	2.5 kV
Insulating material class	CTI 600		
Rated wiring solid wire	0.08 - 1.5 mm²		
Rated wiring stranded wire	0.08 - 1.5 mm²		
Rated wiring solid wire	AWG 28 - 16		
Rated wiring stranded wire	AWG 28 - 16		
Clearance and creepage distances	2 mm		
Solder pin dimension	2 x 0.4 x 0.8 mm		
Recommended pc board hole dia.	ø 1.2 mm		
Solder pin length	3.5 mm		
Protection category according to IEC 60529	IP 20		
Min. insul. strip length	8.5 mm		
Color	black		

Dimensional drawing

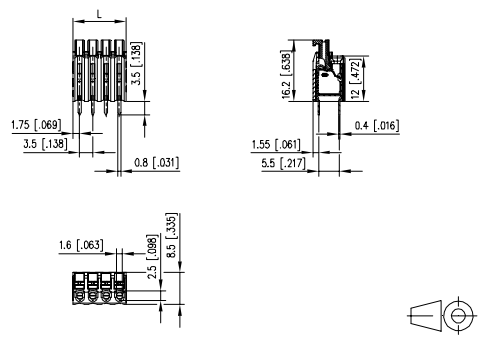

L = (Pole size - 1) * centerline + 3.5 mm (0.138 in.)

P/N

SR213 ☐ **VBPC**

Complete the part number by adding the pole size.

	02	03	04	05	06	07	08
09	10	11	12				

(Information: page 21)

Standard pole sizes

Product family	Pole size	Color	Option
ST02	4	xx	H	D	N	C

*(AST024)

Centerline | Design | Function

*old product name

- spring clamp terminal block, solderable
- centerline 3.81 mm, direction of connection 90°
- color gray
- eccentric lever

Technical data

c UL us V / A / AWG 150 / 7 / 28 - 20

SEV 0.5 mm² 250 V / 6 A / T60

Overvoltage category	III	III	II
Pollution degree	3	2	2
Rated voltage	200 V	500 V	500 V
Rated test voltage	4.0 kV	4 kV	4.0 kV
Insulating material class	CTI 600		
Rated wiring solid wire	0.2 - 0.5 mm²		
Rated wiring stranded wire	0.2 - 0.5 mm²		
Rated wiring solid wire	AWG 28 - 20		
Rated wiring stranded wire	AWG 28 - 20		
Clearance and creepage distances	3 mm		
Solder pin dimension	0.8 x 0.8 mm		
Recommended pc board hole dia.	ø 1.3 mm		
Solder pin length	5 mm		
Protection category according to IEC 60529	IP 20		
Min. insul. strip length	6 mm		
Color	gray		

Dimensional drawing

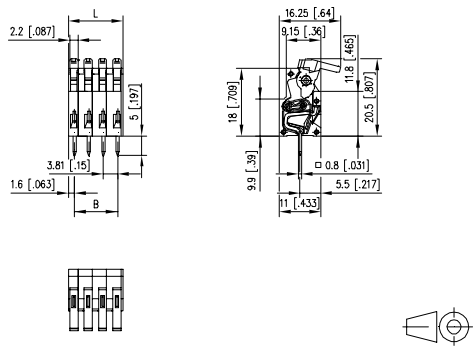

L = (Pole size - 1) * centerline + 3 mm (0.118 in.)

P/N

AST024 ☐

Complete the part number by adding the pole size.

	02	03	04	05	06	07	08
09	10	11	12	13	14	15	16
17	18	19	20	21	22	23	24

(Information: page 21)

■ **Standard pole sizes**

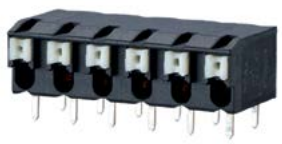

Product family	Pole size	Color	Option
SR21	5xx	H	B N C

Centerline | Design | Function

*(AST225) *old product name

- spring clamp terminal block, THR solderable, double solder pins
- centerline 5.00 mm, direction of connection 90°
- fittable without loss of poles
- color black
- Tape & Reel packaging
- push-button

Technical data

V / A / AWG 300 / 10 / 28 - 16

1.5 mm² 250 V / 17.5 A / T60

Overvoltage category	III	III	II
Pollution degree	3	2	2
Rated voltage	250 V	630 V	630 V
Rated test voltage	4.0 kV	4.0 kV	4 kV
Insulating material class	CTI 600		
Rated wiring solid wire	0.08 - 1.5 mm²		
Rated wiring stranded wire	0.08 - 1.5 mm²		
Rated wiring solid wire	AWG 28 - 16		
Rated wiring stranded wire	AWG 28 - 16		
Clearance and creepage distances	3.4 mm		
Solder pin dimension	2 x 0.4 x 0.8 mm		
Recommended pc board hole dia.	ø 1.2 mm		
Solder pin length	3.45 mm		
Protection category according to IEC 60529	IP 20		
Min. insul. strip length	8.5 mm		
Color	black		

Dimensional drawing

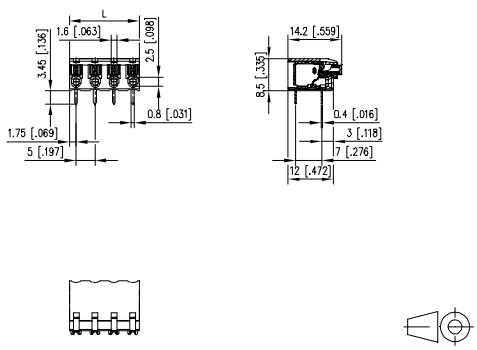

L = (Pole size - 1) * centerline + 3.5 mm (0.138 in.)

P/N

AST225 ☐

Complete the part number by adding the pole size.

	02	03	04	05	06	07	08
09	10	11	12	13	14	15	16

(Information: page 21)

■ Standard pole sizes

Product family	Pole size	Color	Option
SR21	5xx	H	B P C

Centerline | Design | Function

- spring clamp terminal block, THR solderable, double solder pins
- centerline 5.00 mm, direction of connection 90°
- fittable without loss of poles
- color black
- Tape & Reel packaging
- finger push-button

Technical data

V / A / AWG 300 / 10 / 28 - 16

1.5 mm² 250 V / 17.5 A / T60

Overvoltage category	III	III	II
Pollution degree	3	2	2
Rated voltage	250 V	630 V	630 V
Rated test voltage	4.0 kV	4.0 kV	4 kV
Insulating material class	CTI 600		
Rated wiring solid wire	0.08 - 1.5 mm²		
Rated wiring stranded wire	0.08 - 1.5 mm²		
Rated wiring solid wire	AWG 28 - 16		
Rated wiring stranded wire	AWG 28 - 16		
Clearance and creepage distances	3.4 mm		
Solder pin dimension	2 x 0.4 x 0.8 mm		
Recommended pc board hole dia.	ø 1.2 mm		
Solder pin length	3.45 mm		
Protection category according to IEC 60529	IP 20		
Min. insul. strip length	8.5 mm		
Color	black		

Dimensional drawing

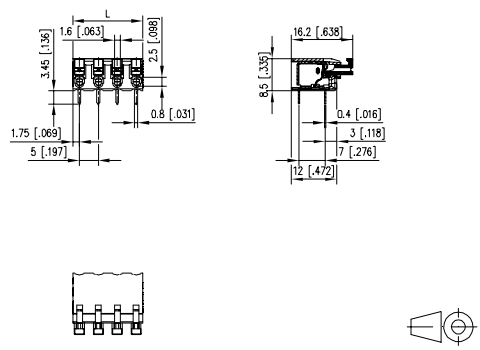

L = (Pole size - 1) * centerline + 3.5 mm (0.138 in.)

P/N

SR215 ☐ HBPC

Complete the part number by adding the pole size.

	02	03	04	05	06	07	08
09	10	11	12	13	14	15	16

(Information: page 21)

■ Standard pole sizes

Product family | Pole size | Color | Option

ST065xxHDNN *(AST065)

Centerline | Design | Function | *old product name

- spring clamp terminal block, solderable
- centerline 5.00 mm, direction of connection 90°
- color gray
- without eccentric lever

Technical data

V / A / AWG	300 / 13 / 28 - 14		
1 mm²	250 V / 13.5 A / T60		
Overvoltage category	III	III	II
Pollution degree	3	2	2
Rated voltage	320 V	800 V	800 V
Rated test voltage	4 kV	4.0 kV	4 kV
Insulating material class	CTI 600		
Rated wiring solid wire	0.2 - 2.0 mm²		
Rated wiring stranded wire	0.2 - 2.0 mm²		
Rated wiring solid wire	AWG 28 - 14		
Rated wiring stranded wire	AWG 28 - 14		
Clearance and creepage distances	4 mm		
Solder pin dimension	1.0 x 0.8 mm		
Recommended pc board hole dia.	ø 1.4 mm		
Solder pin length	5 mm		
Protection category according to IEC 60529	IP 20		
Min. insul. strip length	6 mm		
Color	gray		

Dimensional drawing

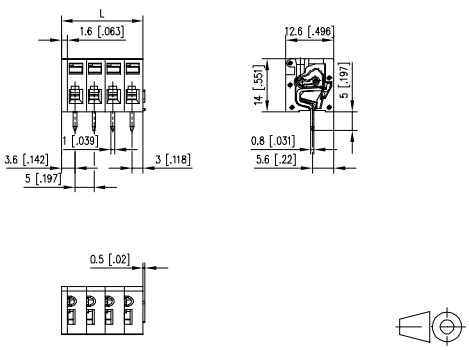

L = (Pole size - 1) * centerline + 7.6 mm (0.299 in.)

P/N
AST065 ☐

Complete the part number by adding the pole size.

	02	03	04	05	06	07	08
09	10	11	12	13	14	15	16
17	18	19	20	21	22	23	24

(Information: page 21)

Standard pole sizes

Product family | Pole size | Color | Option

ST025xxHDNC *(AST025)

Centerline | Design | Function | *old product name

- spring clamp terminal block, solderable
- centerline 5.00 mm, direction of connection 90°
- fittable without loss of poles
- color gray
- eccentric lever

Technical data

V / A / AWG	300 / 13 / 28 - 14		
1 mm²	250 V / 13.5 A / T60		
Overvoltage category	III	III	II
Pollution degree	3	2	2
Rated voltage	250 V	500 V	500 V
Rated test voltage	4.0 kV	4 kV	4.0 kV
Insulating material class	CTI 400		
Rated wiring solid wire	0.2 - 2.0 mm²		
Rated wiring stranded wire	0.2 - 2.0 mm²		
Rated wiring solid wire	AWG 28 - 14		
Rated wiring stranded wire	AWG 28 - 14		
Clearance and creepage distances	4 mm		
Solder pin dimension	1.0 x 0.8 mm		
Recommended pc board hole dia.	ø 1.4 mm		
Solder pin length	5 mm		
Protection category according to IEC 60529	IP 20		
Min. insul. strip length	6 mm		
Color	gray		

Dimensional drawing

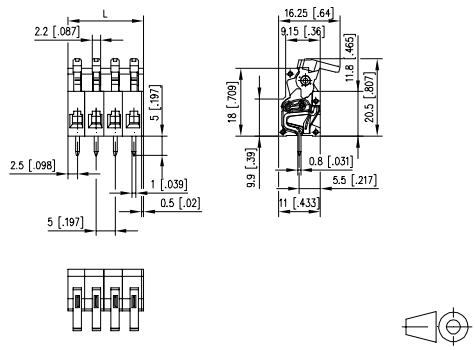

L = (Pole size - 1) * centerline + 5 mm (0.197 in.)

P/N
AST025 ☐

Complete the part number by adding the pole size.

	02	03	04	05	06	07	08
09	10	11	12	13	14	15	16
17	18	19	20	21	22	23	24

(Information: page 21)

Standard pole sizes

Product family	Pole size	Color	Option	
ST05	5xx	H	B	N	C	*(AST055)
Centerline		Design	Function	*old product name

- spring clamp terminal block, solderable
- centerline 5.00 mm, direction of connection 90°
- fittable without loss of poles
- color black
- eccentric lever

Technical data

c UL us V / A / AWG 300 / 12 / 28 - 12

SEV 2.5 mm² 250 V / 20 A / T60

Overvoltage category	III	III	II
Pollution degree	3	2	2
Rated voltage	320 V	800 V	800 V
Rated test voltage	4 kV	4.0 kV	4 kV
Insulating material class	CTI 600		
Rated wiring solid wire	0.08 - 2.5 mm²		
Rated wiring stranded wire	0.08 - 2.5 mm²		
Rated wiring solid wire	AWG 28 - 12		
Rated wiring stranded wire	AWG 28 - 12		
Clearance and creepage distances	4 mm		
Solder pin dimension	1.0 x 0.8 mm		
Recommended pc board hole dia.	ø 1.4 mm		
Solder pin length	3.1 mm		
Protection category according to IEC 60529	IP 20		
Min. insul. strip length	6 mm		
Color	black		

Dimensional drawing

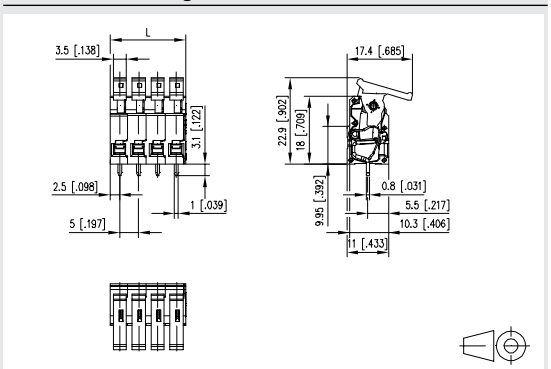

L = (Pole size - 1) * centerline + 5 mm (0.197 in.)

P/N

AST055 ☐

Complete the part number by adding the pole size.

	02	03	04	05	06	07	08
09	10	11	12	13	14	15	16
17	18	19	20	21	22	23	24

(Information: page 21)

Standard pole sizes

Product family	Pole size	Color	Option	
ST09	5xx	H	D	N	N	*(AST095)
Centerline		Design	Function	*old product name

- spring clamp terminal block, solderable, double solder pins
- centerline 5.00 mm, direction of connection 90°
- color gray
- push-button, double solder pins

Technical data

c UL us V / A / AWG 300 / 15 / 28 - 12

SEV 1 mm² 250 V / 13.5 A / T60

Overvoltage category	III	III	II
Pollution degree	3	2	2
Rated voltage	320 V	800 V	800 V
Rated test voltage	4 kV	4.0 kV	4 kV
Insulating material class	CTI 600		
Rated wiring solid wire	0.2 - 2.5 mm²		
Rated wiring stranded wire	0.2 - 2.5 mm²		
Rated wiring solid wire	AWG 28 - 12		
Rated wiring stranded wire	AWG 28 - 12		
Clearance and creepage distances	4.5 mm		
Solder pin dimension	2 x 1.0 x 0.5 mm		
Recommended pc board hole dia.	ø 1.4 mm		
Solder pin length	3.48 mm		
Protection category according to IEC 60529	IP 20		
Min. insul. strip length	15 mm		
Color	gray		

Dimensional drawing

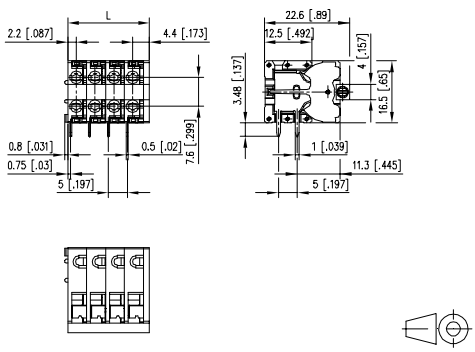

L = (Pole size - 1) * centerline + 6.6 mm (0.260 in.)

P/N

AST095 ☐

Complete the part number by adding the pole size.

	02	03	04	05	06	07	08
09	10	11	12	13	14	15	16
17	18	19	20	21	22	23	24

(Information: page 21)

Standard pole sizes

Product family	Pole size	Color	Option	
SR21	5xx	D	B	N C *(AST235)
Centerline		Design	Function	*old product name

- spring clamp terminal block, THR solderable, double solder pins
- centerline 5.00 mm, direction of connection 45°
- fittable without loss of poles
- color black
- Tape & Reel packaging
- push-button

Technical data

V / A / AWG 300 / 10 / 28 - 16

1.5 mm² 250 V / 17.5 A / T60

Overvoltage category	III	III	II
Pollution degree	3	2	2
Rated voltage	250 V	630 V	630 V
Rated test voltage	4.0 kV	4.0 kV	4 kV
Insulating material class	CTI 600		
Rated wiring solid wire	0.08 - 1.5 mm²		
Rated wiring stranded wire	0.08 - 1.5 mm²		
Rated wiring solid wire	AWG 28 - 16		
Rated wiring stranded wire	AWG 28 - 16		
Clearance and creepage distances	3.7 mm		
Solder pin dimension	2 x 0.4 x 0.8 mm		
Recommended pc board hole dia.	ø 1.2 mm		
Solder pin length	3.5 mm		
Protection category according to IEC 60529	IP 20		
Min. insul. strip length	8.5 mm		
Color	black		

Dimensional drawing

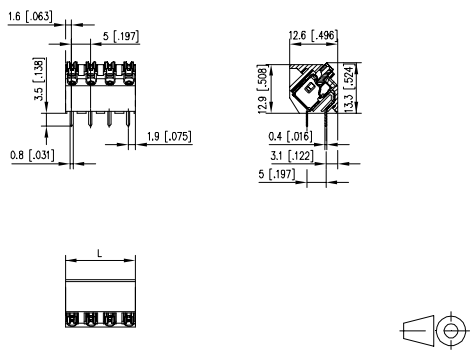

L = (Pole size - 1) * centerline + 3.5 mm (0.138 in.)

P/N
AST235 ☐

Complete the part number by adding the pole size.

	02	03	04	05	06	07	08
09	10	11	12				

(Information: page 21)

Standard pole sizes

Product family	Pole size	Color	Option	
ST04	5xx	D	D	N C *(AST045)
Centerline		Design	Function	*old product name

- spring clamp terminal block, solderable, double solder pins
- centerline 5.00 mm, direction of connection 45°
- fittable without loss of poles
- color gray
- eccentric lever

Technical data

V / A / AWG 300 / 13 / 28 - 14

1 mm² 250 V / 13.5 A / T60

Overvoltage category	III	III	II
Pollution degree	3	2	2
Rated voltage	250 V	500 V	500 V
Rated test voltage	4.0 kV	4 kV	4.0 kV
Insulating material class	CTI 400		
Rated wiring solid wire	0.2 - 1.5 mm²		
Rated wiring stranded wire	0.2 - 1.5 mm²		
Rated wiring solid wire	AWG 28 - 16		
Rated wiring stranded wire	AWG 28 - 16		
Clearance and creepage distances	4 mm		
Solder pin dimension	2 x 1.0 x 0.8 mm		
Recommended pc board hole dia.	ø 1.4 mm		
Solder pin length	3.5 mm		
Protection category according to IEC 60529	IP 20		
Min. insul. strip length	6 mm		
Color	gray		

Dimensional drawing

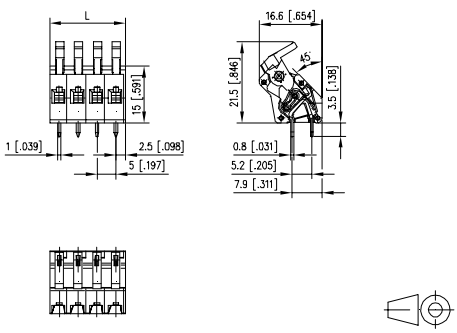

L = (Pole size - 1) * centerline + 5 mm (0.197 in.)

P/N
AST045 ☐

Complete the part number by adding the pole size.

	02	03	04	05	06	07	08
09	10	11	12	13	14	15	16
17	18	19	20	21	22	23	24

(Information: page 21)

Standard pole sizes

Product family | Pole size | Color | Option

ST135xxDDNC *(AST135)

Centerline | Design | Function | *old product name

- spring clamp terminal block, solderable
- centerline 5.00 mm, direction of connection 45°
- fittable without loss of poles
- color gray
- eccentric lever

Technical data

V / A / AWG 300 / 13 / 28 - 14

2.5 mm² 250 V / 24 A / T60

Overvoltage category	III	III	II
Pollution degree	3	2	2
Rated voltage	320 V	800 V	800 V
Rated test voltage	4 kV	4.0 kV	4 kV
Insulating material class	CTI 600		
Rated wiring solid wire	0.2 - 2.5 mm²		
Rated wiring stranded wire	0.2 - 2.5 mm²		
Rated wiring solid wire	AWG 28 - 12		
Rated wiring stranded wire	AWG 28 - 12		
Clearance and creepage distances	4 mm		
Solder pin dimension	0.8 x 1.0 mm		
Recommended pc board hole dia.	ø 1.4 mm		
Solder pin length	3.5 mm		
Protection category according to IEC 60529	IP 20		
Min. insul. strip length	6 mm		
Color	gray		

Dimensional drawing

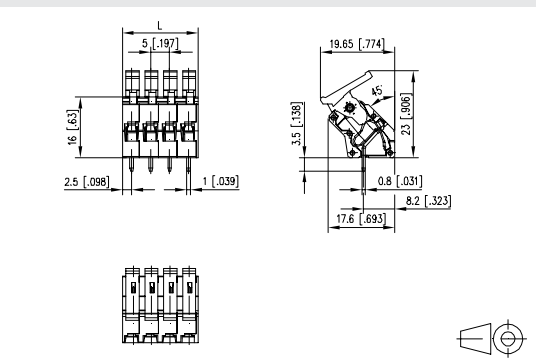

L = (Pole size - 1) * centerline + 5 mm (0.197 in.)

P/N

AST135 ☐

Complete the part number by adding the pole size.

	02	03	04	05	06	07	08
09	10	11	12	13	14	15	16
17	18	19	20	21	22	23	24

(Information: page 21)

Standard pole sizes

Product family | Pole size | Color | Option

ST175xxLDNN *(AST175)

Centerline | Design | Function | *old product name

- spring clamp terminal block, solderable, double solder pins
- centerline 5.00 mm, direction of connection 60°
- color gray
- push-button

Technical data

V / A / AWG 300 / 15 / 28 - 12

1 mm² 250 V / 13.5 A / T60

Overvoltage category	III	III	II
Pollution degree	3	2	2
Rated voltage	320 V	800 V	800 V
Rated test voltage	4 kV	4.0 kV	4 kV
Insulating material class	CTI 600		
Rated wiring solid wire	0.08 - 2.5 mm²		
Rated wiring stranded wire	0.08 - 2.5 mm²		
Rated wiring solid wire	AWG 28 - 12		
Rated wiring stranded wire	AWG 28 - 12		
Clearance and creepage distances	4.5 mm		
Solder pin dimension	2 x 0.5 x 1.0 mm		
Recommended pc board hole dia.	ø 1.4 mm		
Solder pin length	4 mm		
Protection category according to IEC 60529	IP 20		
Min. insul. strip length	15 mm		
Color	gray		

Dimensional drawing

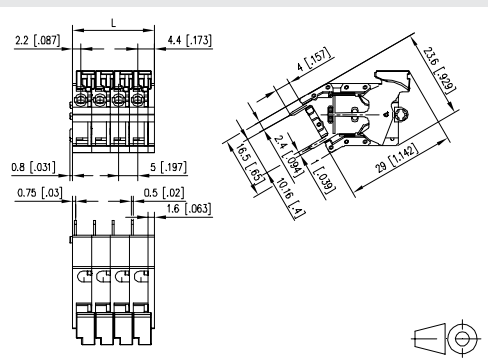

L = (Pole size - 1) * centerline + 6.6 mm (0.260 in.)

P/N

AST175 ☐

Complete the part number by adding the pole size.

	02	03	04	05	06	07	08
09	10	11	12	13	14	15	16
17	18	19	20	21	22	23	24

(Information: page 21)

Standard pole sizes

Product family | Pole size | Color | Option

ST185 5xx L D N N *(AST185)

Centerline | Design | Function | *old product name

- spring clamp terminal block, solderable, double solder pins
- centerline 5.00 mm, direction of connection 60°
- color gray
- push-button, double solder pins

Technical data

V / A / AWG 300 / 15 / 28 - 12

1 mm² 250 V / 13.5 A / T60

Overvoltage category	III	III	II
Pollution degree	3	2	2
Rated voltage	320 V	800 V	800 V
Rated test voltage	4 kV	4.0 kV	4 kV
Insulating material class	CTI 600		
Rated wiring solid wire	0.08 - 2.5 mm²		
Rated wiring stranded wire	0.08 - 2.5 mm²		
Rated wiring solid wire	AWG 28 - 12		
Rated wiring stranded wire	AWG 28 - 12		
Clearance and creepage distances	4.5 mm		
Solder pin dimension	2 x 0.5 x 1.0 mm		
Recommended pc board hole dia.	ø 1.4 mm		
Solder pin length	4 mm		
Protection category according to IEC 60529	IP 20		
Min. insul. strip length	15 mm		
Color	gray		

Dimensional drawing

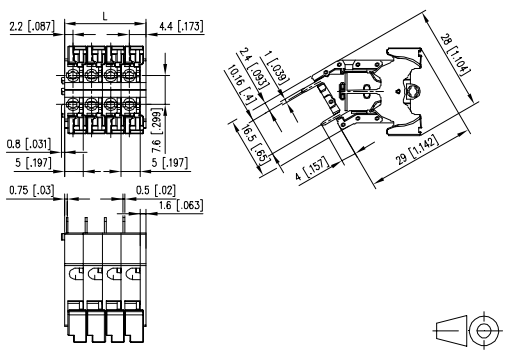

L = (Pole size - 1) * centerline + 6.6 mm (0.260 in.)

P/N

AST185 ☐

Complete the part number by adding the pole size.

	02	03	04	05	06	07	08
09	10	11	12	13	14	15	16
17	18	19	20	21	22	23	24

(Information: page 21)

■ **Standard pole sizes**

Product family | Pole size | Color | Option

SR215 5xx V B N C *(AST215)

Centerline | Design | Function | *old product name

- spring clamp terminal block, THR solderable, double solder pins
- centerline 5.00 mm, direction of connection vertical 0°
- fittable without loss of poles
- color black
- Tape & Reel packaging
- push-button

Technical data

V / A / AWG 300 / 10 / 28 - 16

1.5 mm² 250 V / 17.5 A / T60

Overvoltage category	III	III	II
Pollution degree	3	2	2
Rated voltage	250 V	630 V	630 V
Rated test voltage	4.0 kV	4.0 kV	4 kV
Insulating material class	CTI 600		
Rated wiring solid wire	0.08 - 1.5 mm²		
Rated wiring stranded wire	0.08 - 1.5 mm²		
Rated wiring solid wire	AWG 28 - 16		
Rated wiring stranded wire	AWG 28 - 16		
Clearance and creepage distances	3.4 mm		
Solder pin dimension	2 x 0.4 x 0.8 mm		
Recommended pc board hole dia.	ø 1.2 mm		
Solder pin length	3.5 mm		
Protection category according to IEC 60529	IP 20		
Min. insul. strip length	8.5 mm		
Color	black		

Dimensional drawing

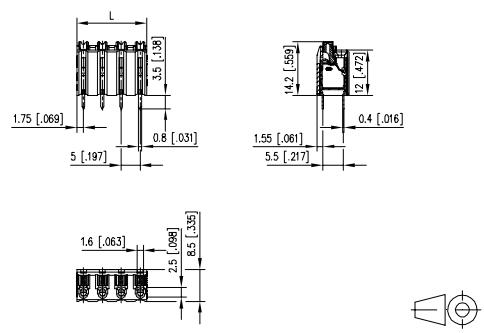

L = (Pole size - 1) * centerline + 3.5 mm (0.138 in.)

P/N

AST215 ☐

Complete the part number by adding the pole size.

	02	03	04	05	06	07	08
09	10	11	12	13	14	15	16

(Information: page 21)

■ **Standard pole sizes**

Product family	Pole size	Color	Option
SR215	5xx	VB	PC
Centerline		Design	Function

- spring clamp terminal block, THR solderable, double solder pins
- centerline 5.00 mm, direction of connection vertical 0°
- fittable without loss of poles
- color black
- Tape & Reel packaging
- finger push-button

Technical data

cULus V / A / AWG 300 / 10 / 28 - 16

SEV 1.5 mm² 250 V / 17.5 A / T60

Overvoltage category	III	III	II
Pollution degree	3	2	2
Rated voltage	250 V	630 V	630 V
Rated test voltage	4.0 kV	4.0 kV	4 kV
Insulating material class	CTI 600		
Rated wiring solid wire	0.08 - 1.5 mm²		
Rated wiring stranded wire	0.08 - 1.5 mm²		
Rated wiring solid wire	AWG 28 - 16		
Rated wiring stranded wire	AWG 28 - 16		
Clearance and creepage distances	3.4 mm		
Solder pin dimension	2 x 0.4 x 0.8 mm		
Recommended pc board hole dia.	ø 1.2 mm		
Solder pin length	3.5 mm		
Protection category according to IEC 60529	IP 20		
Min. insul. strip length	8.5 mm		
Color	black		

Dimensional drawing

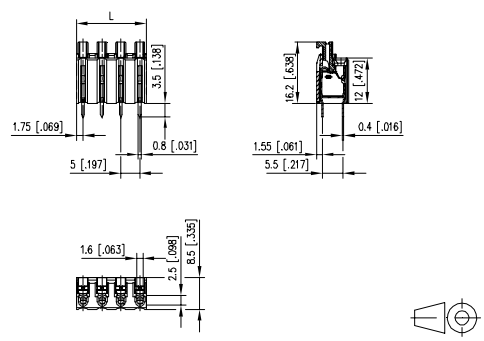

L = (Pole size - 1) * centerline + 3.5 mm (0.138 in.)

P/N

SR215 ☐ VBPC

Complete the part number by adding the pole size.

	02	03	04	05	06	07	08
09	10	11	12	13	14	15	16

(Information: page 21)

Standard pole sizes

Product family	Pole size	Color	Option
ST105	5xx	VD	NN
Centerline		Design	Function

*(AST105)

*old product name

- spring clamp terminal block, solderable, double solder pins
- centerline 5.00 mm, direction of connection vertical 0°
- color gray
- push-button, double solder pins

Technical data

cULus V / A / AWG 300 / 15 / 28 - 12

SEV 1 mm² 250 V / 13.5 A / T60

Overvoltage category	III	III	II
Pollution degree	3	2	2
Rated voltage	320 V	800 V	800 V
Rated test voltage	4 kV	4.0 kV	4 kV
Insulating material class	CTI 600		
Rated wiring solid wire	0.2 - 2.5 mm²		
Rated wiring stranded wire	0.2 - 2.5 mm²		
Rated wiring solid wire	AWG 28 - 12		
Rated wiring stranded wire	AWG 28 - 12		
Clearance and creepage distances	4.5 mm		
Solder pin dimension	2 x 0.5 x 1.0 mm		
Recommended pc board hole dia.	ø 1.4 mm		
Solder pin length	3.4 mm		
Protection category according to IEC 60529	IP 20		
Min. insul. strip length	15 mm		
Color	gray		

Dimensional drawing

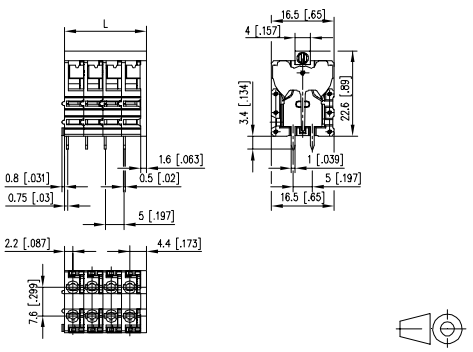

L = (Pole size - 1) * centerline + 6.6 mm (0.260 in.)

P/N

AST105 ☐

Complete the part number by adding the pole size.

	02	03	04	05	06	07	08
09	10	11	12	13	14	15	16
17	18	19	20	21	22	23	24

(Information: page 21)

Standard pole sizes

Product family | Pole size | Color | Option

ST125xxVDNN *(AST125)

Centerline | Design | Function | *old product name

- spring clamp terminal block, solderable, double solder pins
- centerline 5.00 mm, direction of connection vertical 0°
- color gray
- finger push-button, double solder pins

Technical data

cULus V / A / AWG 300 / 15 / 28 - 12

SEV 1 mm² 250 V / 13.5 A / T60

Overvoltage category	III	III	II
Pollution degree	3	2	2
Rated voltage	320 V	800 V	800 V
Rated test voltage	4 kV	4.0 kV	4 kV
Insulating material class	CTI 600		
Rated wiring solid wire	0.2 - 2.5 mm²		
Rated wiring stranded wire	0.2 - 2.5 mm²		
Rated wiring solid wire	AWG 28 - 12		
Rated wiring stranded wire	AWG 28 - 12		
Clearance and creepage distances	4.5 mm		
Solder pin dimension	2 x 0.5 x 1.0 mm		
Recommended pc board hole dia.	ø 1.4 mm		
Solder pin length	3.4 mm		
Protection category according to IEC 60529	IP 20		
Min. insul. strip length	15 mm		
Color	gray		

Dimensional drawing

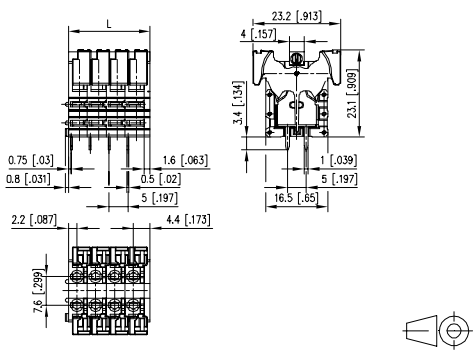

L = (Pole size - 1) * centerline + 6.6 mm (0.260 in.)

P/N

AST125 ☐

Complete the part number by adding the pole size.

	02	03	04	05	06	07	08
09	10	11	12	13	14	15	16
17	18	19	20	21	22	23	24

(Information: page 21)

■ **Standard pole sizes**

Product family | Pole size | Color | Option

ST145xxVDNN *(AST145)

Centerline | Design | Function | *old product name

- spring clamp terminal block, solderable, double solder pins
- centerline 5.00 mm, direction of connection vertical 0°
- color gray
- push-button, two individual contacts per centerline

Technical data

cULus V / A / AWG 300 / 17 / 28 - 14

SEV 1.5 mm² 450 V / 17.5 A / T60

Overvoltage category	III	III	II
Pollution degree	3	2	2
Rated voltage	320 V	800 V	800 V
Rated test voltage	4 kV	4.0 kV	4 kV
Insulating material class	CTI 600		
Rated wiring solid wire	0.2 - 2.5 mm²		
Rated wiring stranded wire	0.2 - 2.5 mm²		
Rated wiring solid wire	AWG 28 - 12		
Rated wiring stranded wire	AWG 28 - 12		
Clearance and creepage distances	4.5 mm		
Solder pin dimension	2 x 0.5 x 1.0 mm		
Recommended pc board hole dia.	ø 1.4 mm		
Solder pin length	3.2 mm		
Protection category according to IEC 60529	IP 20		
Min. insul. strip length	12 mm		
Color	gray		

Dimensional drawing

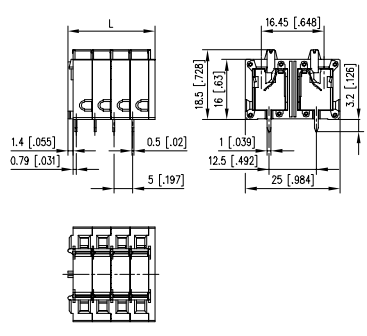

L = (Pole size - 1) * centerline + 8 mm (0.315 in.)

P/N

AST145 ☐

Complete the part number by adding the pole size.

	04	06	08	10	12	14	16
18	20	22	24	26	28	30	32
34	36	38	40	42	48		

(Information: page 21)

■ **Standard pole sizes**

Product family | Pole size | Color | Option

ST176xxLDNN *(AST176)

Centerline | Design | Function | *old product name

- spring clamp terminal block, solderable, double solder pins
- centerline 5.08 mm, direction of connection 60°
- color gray
- push-button

Technical data

V / A / AWG 300 / 15 / 28 - 12

1 mm² 250 V / 13.5 A / T60

Overvoltage category	III	III	II
Pollution degree	3	2	2
Rated voltage	320 V	800 V	800 V
Rated test voltage	4 kV	4.0 kV	4 kV
Insulating material class	CTI 600		
Rated wiring solid wire	0.08 - 2.5 mm²		
Rated wiring stranded wire	0.08 - 2.5 mm²		
Rated wiring solid wire	AWG 28 - 12		
Rated wiring stranded wire	AWG 28 - 12		
Clearance and creepage distances	4.5 mm		
Solder pin dimension	2 x 0.5 x 1.0 mm		
Recommended pc board hole dia.	ø 1.4 mm		
Solder pin length	4 mm		
Protection category according to IEC 60529	IP 20		
Min. insul. strip length	15 mm		
Color	gray		

Dimensional drawing

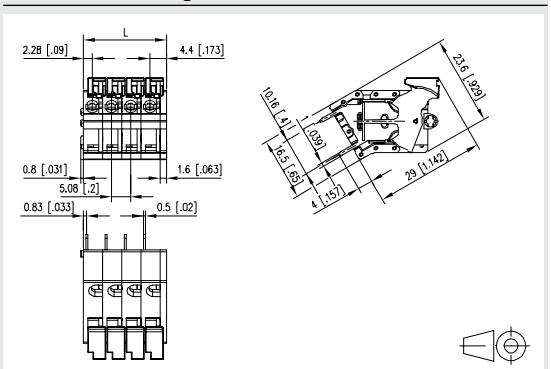

L = (Pole size - 1) * centerline + 6.68 mm (0.263 in.)

P/N

AST176 ☐

Complete the part number by adding the pole size.

	02	03	04	05	06	07	08
09	10	11	12	13	14	15	16
17	18	19	20	21	22	23	24

(Information: page 21)

Standard pole sizes

Product family | Pole size | Color | Option

ST186xxLDNN *(AST186)

Centerline | Design | Function | *old product name

- spring clamp terminal block, solderable, double solder pins
- centerline 5.08 mm, direction of connection 60°
- color gray
- push-button, double solder pins

Technical data

V / A / AWG 300 / 15 / 28 - 12

1 mm² 250 V / 13.5 A / T60

Overvoltage category	III	III	II
Pollution degree	3	2	2
Rated voltage	320 V	800 V	800 V
Rated test voltage	4 kV	4.0 kV	4 kV
Insulating material class	CTI 600		
Rated wiring solid wire	0.08 - 2.5 mm²		
Rated wiring stranded wire	0.08 - 2.5 mm²		
Rated wiring solid wire	AWG 28 - 12		
Rated wiring stranded wire	AWG 28 - 12		
Clearance and creepage distances	4.5 mm		
Solder pin dimension	2 x 0.5 x 1.0 mm		
Recommended pc board hole dia.	ø 1.4 mm		
Solder pin length	4 mm		
Protection category according to IEC 60529	IP 20		
Min. insul. strip length	15 mm		
Color	gray		

Dimensional drawing

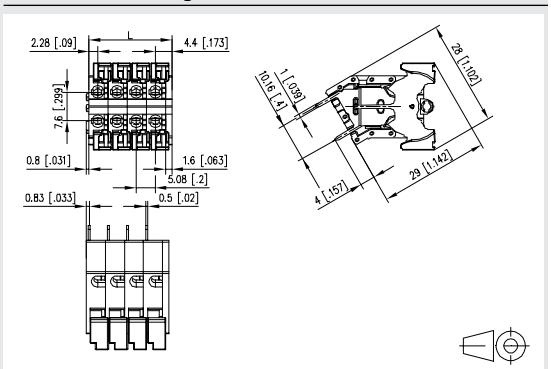

L = (Pole size - 1) * centerline + 6.68 mm (0.263 in.)

P/N

AST186 ☐

Complete the part number by adding the pole size.

	02	03	04	05	06	07	08
09	10	11	12	13	14	15	16
17	18	19	20	21	22	23	24

(Information: page 21)

Standard pole sizes

Product family	Pole size	Color	Option	
ST067	7	xx	HDN	N *(AST067)
Centerline		Design	Function	*old product name

- spring clamp terminal block, solderable
- centerline 7.50 mm, direction of connection 90°
- color gray
- without eccentric lever

Technical data

V / A / AWG 600 / 13 / 28 - 14

1 mm² 750 V / 13.5 A / T60

Overvoltage category	III	III	II
Pollution degree	3	2	2
Rated voltage	400 V	800 V	800 V
Rated test voltage	6.0 kV	6 kV	6.0 kV
Insulating material class	CTI 400		
Rated wiring solid wire	0.2 - 2.0 mm²		
Rated wiring stranded wire	0.2 - 2.0 mm²		
Rated wiring solid wire	AWG 28 - 14		
Rated wiring stranded wire	AWG 28 - 14		
Clearance and creepage distances	6.5 mm		
Solder pin dimension	1.0 x 0.8 mm		
Recommended pc board hole dia.	ø 1.4 mm		
Solder pin length	5 mm		
Protection category according to IEC 60529	IP 20		
Min. insul. strip length	6 mm		
Color	gray		

Dimensional drawing

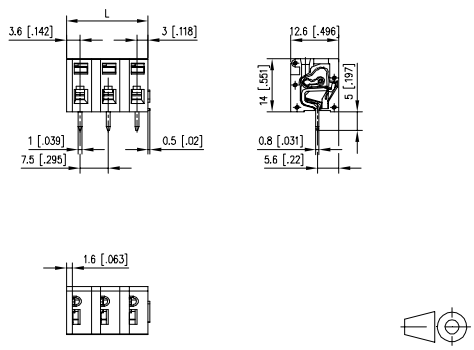

L = (Pole size - 1) * centerline + 6.6 mm (0.260 in.)

P/N
AST067 ☐

Complete the part number by adding the pole size.

	02	03	04	05	06	07	08
09	10	11	12	13	14	15	16
17	18	19	20	21	22	23	24

(Information: page 21)

Standard pole sizes

Product family	Pole size	Color	Option	
ST027	7	xx	HDN	C *(AST027)
Centerline		Design	Function	*old product name

- spring clamp terminal block, solderable
- centerline 7.50 mm, direction of connection 90°
- fittable without loss of poles
- color gray
- eccentric lever

Technical data

V / A / AWG 600 / 13 / 28 - 14

1 mm² 750 V / 13.5 A / T60

Overvoltage category	III	III	II
Pollution degree	3	2	2
Rated voltage	400 V	800 V	800 V
Rated test voltage	6.0 kV	6 kV	6.0 kV
Insulating material class	CTI 400		
Rated wiring solid wire	0.2 - 2.0 mm²		
Rated wiring stranded wire	0.2 - 2.0 mm²		
Rated wiring solid wire	AWG 28 - 14		
Rated wiring stranded wire	AWG 28 - 14		
Clearance and creepage distances	6.5 mm		
Solder pin dimension	1.0 x 0.8 mm		
Recommended pc board hole dia.	ø 1.4 mm		
Solder pin length	5 mm		
Protection category according to IEC 60529	IP 20		
Min. insul. strip length	6 mm		
Color	gray		

Dimensional drawing

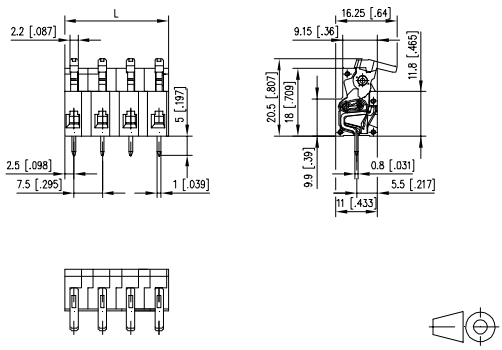

L = (Pole size - 1) * centerline + 5 mm (0.197 in.)

P/N
AST027 ☐

Complete the part number by adding the pole size.

	02	03	04	05	06	07	08
09	10	11	12	13	14	15	16
17	18	19	20	21	22	23	24

(Information: page 21)

Standard pole sizes

Product family | Pole size | Color | Option

ST057xxHBNC *(AST057)

Centerline | Design | Function | *old product name

- spring clamp terminal block, solderable
- centerline 7.50 mm, direction of connection 90°
- fittable without loss of poles
- color black
- eccentric lever

Technical data

c UL us V / A / AWG 300 / 17 / 28 - 12

SEV 2.5 mm² 250 V / 20 A / T60

Overvoltage category	III	III	II
Pollution degree	3	2	2
Rated voltage	500 V	1250 V	1250 V
Rated test voltage	6.0 kV	6.0 kV	6 kV
Insulating material class	CTI 600		
Rated wiring solid wire	0.08 - 2.5 mm²		
Rated wiring stranded wire	0.08 - 2.5 mm²		
Rated wiring solid wire	AWG 28 - 12		
Rated wiring stranded wire	AWG 28 - 12		
Clearance and creepage distances	6.5 mm		
Solder pin dimension	1.0 x 0.8 mm		
Recommended pc board hole dia.	ø 1.4 mm		
Solder pin length	3.1 mm		
Protection category according to IEC 60529	IP 20		
Min. insul. strip length	6 mm		
Color	black		

Dimensional drawing

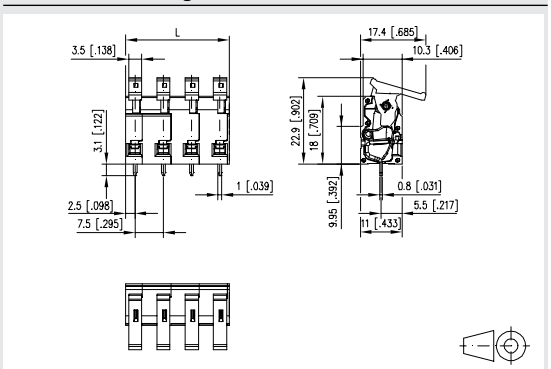

L = (Pole size - 1) * centerline + 5 mm (0.197 in.)

P/N

AST057 ☐

Complete the part number by adding the pole size.

	02	03	04	05	06	07	08
09	10	11	12	13	14	15	16
17	18	19	20	21	22	23	24

(Information: page 21)

Standard pole sizes

Product family | Pole size | Color | Option

SR207xxDBVN

Centerline | Design | Function

- spring clamp terminal block, THR solderable, double solder pins
- centerline 7.50 mm, direction of connection 45°
- color black
- push-button, double solder pins

Technical data

c UL us V / A / AWG 300 / 16 / 20 - 14

SEV 2.5 mm² 250 V / 24 A / T60

Overvoltage category	III	III	II
Pollution degree	3	2	2
Rated voltage	320 V	800 V	800 V
Rated test voltage	4 kV	4 kV	4 kV
Insulating material class	CTI 600		
Rated wiring solid wire	0.5 - 2.5 mm²		
Rated wiring stranded wire	0.5 - 2.5 mm²		
Rated wiring solid wire	AWG 20 - 14		
Rated wiring stranded wire	AWG 20 - 14		
Clearance and creepage distances	4.7 mm		
Solder pin dimension	2 x 0.5 x 1.5 mm		
Recommended pc board hole dia.	ø 1.8 mm		
Solder pin length	3 mm		
Protection category according to IEC 60529	IP20		
Min. insul. strip length	9 mm		
Color	black		

Dimensional drawing

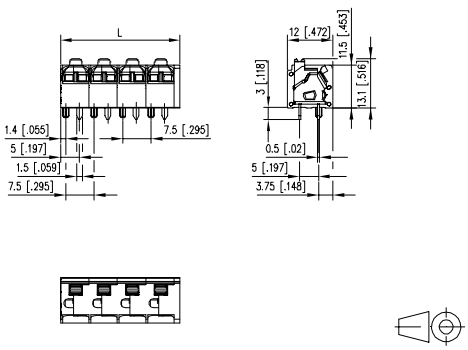

L = (Pole size - 1) * centerline + 9,1 mm (0,354 in.)

P/N

SR207xxDBVN ☐

Complete the part number by adding the pole size.

	02	03	04	05	06	07	08
09	10	11	12				

(Information: page 21)

Standard pole sizes

Product family | Pole size | Color | Option

ST047xxDDNC *(AST047)

Centerline | Design | Function | *old product name

- spring clamp terminal block, solderable, double solder pins
- centerline 7.50 mm, direction of connection 45°
- fittable without loss of poles
- color gray
- eccentric lever

Technical data

c UL us V / A / AWG 600 / 13 / 28 - 14

SEV 1 mm² 750 V / 13.5 A / T60

Overvoltage category	III	III	II
Pollution degree	3	2	2
Rated voltage	400 V	800 V	800 V
Rated test voltage	6.0 kV	6 kV	6.0 kV
Insulating material class	CTI 400		
Rated wiring solid wire	0.2 - 1.5 mm²		
Rated wiring stranded wire	0.2 - 1.5 mm²		
Rated wiring solid wire	AWG 28 - 16		
Rated wiring stranded wire	AWG 28 - 16		
Clearance and creepage distances	6.5 mm		
Solder pin dimension	2 x 1.0 x 0.8 mm		
Recommended pc board hole dia.	ø 1.4 mm		
Solder pin length	3.5 mm		
Protection category according to IEC 60529	IP 20		
Min. insul. strip length	6 mm		
Color	gray		

Dimensional drawing

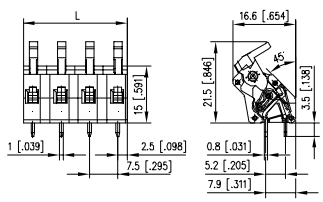

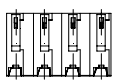

L = (Pole size - 1) * centerline + 5 mm (0.197 in.)

P/N

AST047 ☐

Complete the part number by adding the pole size.

	02	03	04	05	06	07	08
09	10	11	12	13	14	15	16
17	18	19	20	21	22	23	24

(Information: page 21)

Standard pole sizes

Product family | Pole size | Color | Option

ST137xxDDNC *(AST137)

Centerline | Design | Function | *old product name

- spring clamp terminal block, solderable
- centerline 7.50 mm, direction of connection 45°
- fittable without loss of poles
- color gray
- eccentric lever

Technical data

c UL us V / A / AWG 300 / 13 / 28 - 14

SEV 2.5 mm² 750 V / 24 A / T60

Overvoltage category	III	III	II
Pollution degree	3	2	2
Rated voltage	500 V	1250 V	1250 V
Rated test voltage	6.0 kV	6.0 kV	6 kV
Insulating material class	CTI 600		
Rated wiring solid wire	0.2 - 2.5 mm²		
Rated wiring stranded wire	0.2 - 2.5 mm²		
Rated wiring solid wire	AWG 28 - 12		
Rated wiring stranded wire	AWG 28 - 14		
Clearance and creepage distances	6.5 mm		
Solder pin dimension	0.8 x 1.0 mm		
Recommended pc board hole dia.	ø 1.4 mm		
Solder pin length	3.5 mm		
Protection category according to IEC 60529	IP 20		
Min. insul. strip length	6 mm		
Color	gray		

Dimensional drawing

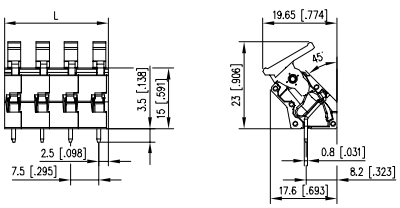

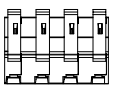

L = (Pole size - 1) * centerline + 5 mm (0.197 in.)

P/N

AST137 ☐

Complete the part number by adding the pole size.

	02	03	04	05	06	07	08
09	10	11	12	13	14	15	16
17	18	19	20	21	22	23	24

(Information: page 21)

Standard pole sizes

* Approval pending

Product family	Pole size	Color	Option	
ST177	xx	L	DNN	*(AST177)
Centerline	Design	Function		*old product name

- spring clamp terminal block, solderable, double solder pins
- centerline 7.50 mm, direction of connection 60°
- color gray
- push-button

Technical data

V / A / AWG 750 / 15 / 28 - 12

1 mm² 250 V / 13.5 A / T60

Overvoltage category	III	III	II
Pollution degree	3	2	2
Rated voltage	500 V	1250 V	1250 V
Rated test voltage	6.0 kV	6.0 kV	6 kV
Insulating material class	CTI 600		
Rated wiring solid wire	0.08 - 2.5 mm²		
Rated wiring stranded wire	0.08 - 2.5 mm²		
Rated wiring solid wire	AWG 28 - 12		
Rated wiring stranded wire	AWG 28 - 12		
Clearance and creepage distances	7.12 mm		
Solder pin dimension	2 x 0.5 x 1.0 mm		
Recommended pc board hole dia.	ø 1.4 mm		
Solder pin length	4 mm		
Protection category according to IEC 60529	IP 20		
Min. insul. strip length	15 mm		
Color	gray		

Dimensional drawing

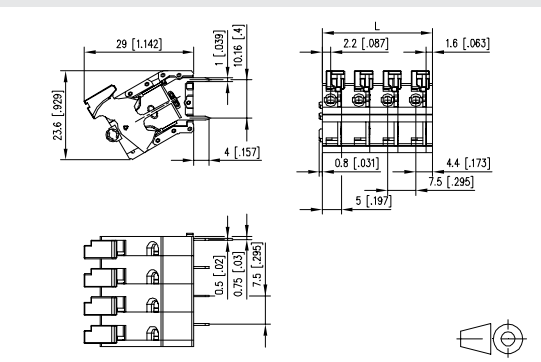

L = (Pole size - 1) * centerline + 6.6 mm (0.260 in.)

P/N

AST177 ☐

Complete the part number by adding the pole size.

	02	03	04	05	06	07	08
09	10	11	12	13	14	15	16
17	18	19	20	21	22	23	24

(Information: page 21)

Standard pole sizes

* Approval pending

Product family	Pole size	Color	Option	
ST187	xx	L	DNN	*(AST187)
Centerline	Design	Function		*old product name

- spring clamp terminal block, solderable, double solder pins
- centerline 7.50 mm, direction of connection 60°
- color gray
- push-button, double solder pins

Technical data

V / A / AWG 750 / 15 / 28 - 12

1 mm² 250 V / 13.5 A / T60

Overvoltage category	III	III	II
Pollution degree	3	2	2
Rated voltage	500 V	1250 V	1250 V
Rated test voltage	6.0 kV	6.0 kV	6 kV
Insulating material class	CTI 600		
Rated wiring solid wire	0.08 - 2.5 mm²		
Rated wiring stranded wire	0.08 - 2.5 mm²		
Rated wiring solid wire	AWG 28 - 12		
Rated wiring stranded wire	AWG 28 - 12		
Clearance and creepage distances	7.12 mm		
Solder pin dimension	2 x 0.5 x 1.0 mm		
Recommended pc board hole dia.	ø 1.4 mm		
Solder pin length	4 mm		
Protection category according to IEC 60529	IP 20		
Min. insul. strip length	15 mm		
Color	gray		

Dimensional drawing

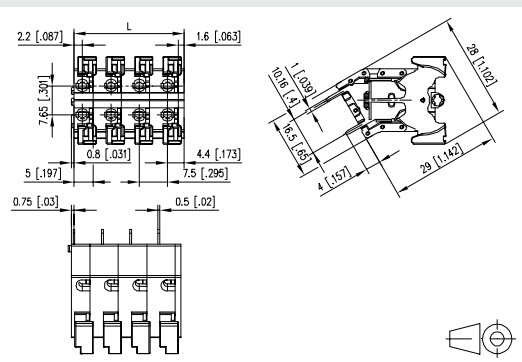

L = (Pole size - 1) * centerline + 6.6 mm (0.260 in.)

P/N

AST187 ☐

Complete the part number by adding the pole size.

	02	03	04	05	06	07	08
09	10	11	12	13	14	15	16
17	18	19	20	21	22	23	24

(Information: page 21)

Standard pole sizes

Product family | Pole size | Color | Option

ST098xxHDNN *(AST098)

Centerline | Design | Function | *old product name

- spring clamp terminal block, solderable, double solder pins
- centerline 7.62 mm, direction of connection 90°
- color gray
- push-button, double solder pins

Technical data

cULus V / A / AWG 600 / 15 / 28 - 12

SEV 1 mm² 250 V / 13.5 A / T60

Overvoltage category	III	III	II
Pollution degree	3	2	2
Rated voltage	500 V	1250 V	1250 V
Rated test voltage	6.0 kV	6.0 kV	6 kV
Insulating material class	CTI 600		
Rated wiring solid wire	0.2 - 2.5 mm²		
Rated wiring stranded wire	0.2 - 2.5 mm²		
Rated wiring solid wire	AWG 28 - 12		
Rated wiring stranded wire	AWG 28 - 12		
Clearance and creepage distances	7.12 mm		
Solder pin dimension	2 x 1.0 x 0.8 mm		
Recommended pc board hole dia.	ø 1.4 mm		
Solder pin length	3.48 mm		
Protection category according to IEC 60529	IP 20		
Min. insul. strip length	15 mm		
Color	gray		

Dimensional drawing

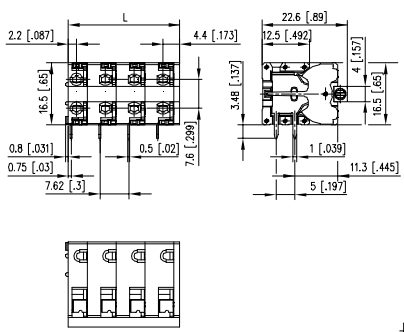

L = (Pole size - 1) * centerline + 6.6 mm (0.260 in.)

P/N

AST098 ☐

Complete the part number by adding the pole size.

	02	03	04	05	06	07	08
09	10	11	12				

(Information: page 21)

Standard pole sizes

* Approval pending

Product family | Pole size | Color | Option

ST178xxLDNN *(AST178)

Centerline | Design | Function | *old product name

- spring clamp terminal block, solderable, double solder pins
- centerline 7.62 mm, direction of connection 60°
- color gray
- push-button

Technical data

cULus* V / A / AWG 750 / 15 / 28 - 12

SEV 1 mm² 250 V / 13.5 A / T60

Overvoltage category	III	III	II
Pollution degree	3	2	2
Rated voltage	500 V	1250 V	1250 V
Rated test voltage	6.0 kV	6.0 kV	6 kV
Insulating material class	CTI 600		
Rated wiring solid wire	0.08 - 2.5 mm²		
Rated wiring stranded wire	0.08 - 2.5 mm²		
Rated wiring solid wire	AWG 28 - 12		
Rated wiring stranded wire	AWG 28 - 12		
Clearance and creepage distances	7.12 mm		
Solder pin dimension	2 x 0.5 x 1.0 mm		
Recommended pc board hole dia.	ø 1.4 mm		
Solder pin length	4 mm		
Protection category according to IEC 60529	IP 20		
Min. insul. strip length	15 mm		
Color	gray		

Dimensional drawing

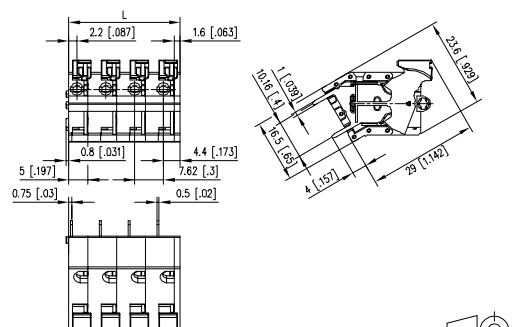

L = (Pole size - 1) * centerline + 6.6 mm (0.260 in.)

P/N

AST178 ☐

Complete the part number by adding the pole size.

	02	03	04	05	06	07	08
09	10	11	12	13	14	15	16
17	18	19	20	21	22	23	24

(Information: page 21)

Standard pole sizes

* Approval pending

Product family	Pole size	Color	Option	
ST188	8xx	L	DNN	*(AST188)
Centerline	Design	Function		*old product name

- spring clamp terminal block, solderable, double solder pins
- centerline 7.62 mm, direction of connection 60°
- color gray
- push-button, double solder pins

Technical data

V / A / AWG 750 / 15 / 28 - 12

1 mm² 250 V / 13.5 A / T60

Overvoltage category	III	III	II
Pollution degree	3	2	2
Rated voltage	500 V	1250 V	1250 V
Rated test voltage	6.0 kV	6.0 kV	6 kV
Insulating material class	CTI 600		
Rated wiring solid wire	0.08 - 2.5 mm²		
Rated wiring stranded wire	0.08 - 2.5 mm²		
Rated wiring solid wire	AWG 28 - 12		
Rated wiring stranded wire	AWG 28 - 12		
Clearance and creepage distances	7.12 mm		
Solder pin dimension	2 x 0.5 x 1.0 mm		
Recommended pc board hole dia.	ø 1.4 mm		
Solder pin length	4 mm		
Protection category according to IEC 60529	IP 20		
Min. insul. strip length	15 mm		
Color	gray		

Dimensional drawing

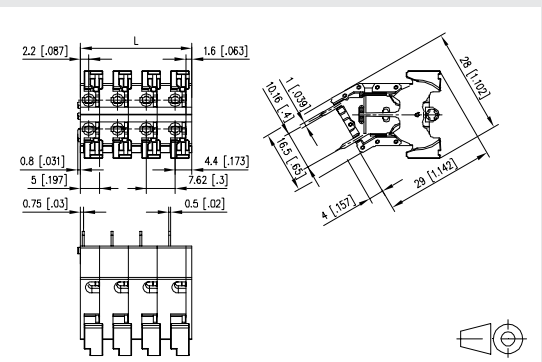

L = (Pole size - 1) * centerline + 6.6 mm (0.260 in.)

P/N

AST188 ☐

Complete the part number by adding the pole size.

	02	03	04	05	06	07	08
09	10	11	12	13	14	15	16
17	18	19	20	21	22	23	24

(Information: page 21)

Standard pole sizes

Product family	Pole size	Color	Option	
ST108	8xx	V	DNN	*(AST108)
Centerline	Design	Function		*old product name

- spring clamp terminal block, solderable, double solder pins
- centerline 7.62 mm, direction of connection vertical 0°
- color gray
- push-button, double solder pins

Technical data

V / A / AWG 600 / 15 / 28 - 12

1 mm² 250 V / 13.5 A / T60

Overvoltage category	III	III	II
Pollution degree	3	2	2
Rated voltage	500 V	1250 V	1250 V
Rated test voltage	6.0 kV	6.0 kV	6 kV
Insulating material class	CTI 600		
Rated wiring solid wire	0.2 - 2.5 mm²		
Rated wiring stranded wire	0.2 - 2.5 mm²		
Rated wiring solid wire	AWG 28 - 12		
Rated wiring stranded wire	AWG 28 - 12		
Clearance and creepage distances	7.12 mm		
Solder pin dimension	2 x 0.5 x 1.0 mm		
Recommended pc board hole dia.	ø 1.4 mm		
Solder pin length	3.4 mm		
Protection category according to IEC 60529	IP 20		
Min. insul. strip length	15 mm		
Color	gray		

Dimensional drawing

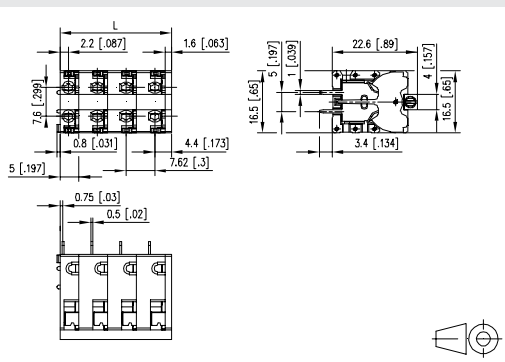

L = (Pole size - 1) * centerline + 6.6 mm (0.260 in.)

P/N

AST108 ☐

Complete the part number by adding the pole size.

	02	03	04	05	06	07	08
09	10	11	12				

(Information: page 21)

Standard pole sizes

Product family	Pole size	Color	Option
ST128	xx	V	DNN

*(AST128)

Centerline | Design | Function

*old product name

- spring clamp terminal block, solderable, double solder pins
- centerline 7.62 mm, direction of connection vertical 0°
- color gray
- finger push-button, double solder pins

Technical data

c UL us V / A / AWG 600 / 15 / 28 - 12

SEV 1 mm² 250 V / 13.5 A / T60

Overvoltage category	III	III	II
Pollution degree	3	2	2
Rated voltage	500 V	1250 V	1250 V
Rated test voltage	6.0 kV	6.0 kV	6 kV
Insulating material class	CTI 600		
Rated wiring solid wire	0.2 - 2.5 mm²		
Rated wiring stranded wire	0.2 - 2.5 mm²		
Rated wiring solid wire	AWG 28 - 12		
Rated wiring stranded wire	AWG 28 - 12		
Clearance and creepage distances	7.12 mm		
Solder pin dimension	2 x 0.5 x 1.0 mm		
Recommended pc board hole dia.	ø 1.4 mm		
Solder pin length	3.4 mm		
Protection category according to IEC 60529	IP 20		
Min. insul. strip length	15 mm		
Color	gray		

Dimensional drawing

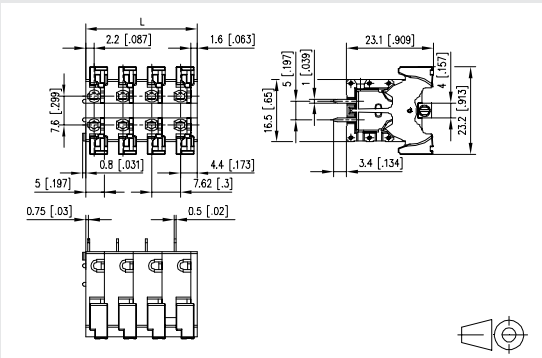

L = (Pole size - 1) * centerline + 6.6 mm (0.260 in.)

P/N

AST128 ☐

Complete the part number by adding the pole size.

	02	03	04	05	06	07	08
09	10	11	12	13	14	15	16
17	18	19	20	21	22	23	24

(Information: page 21)

■ **Standard pole sizes**

Product family | Pole size | Color | Option

ST059 9xxHBNC *(AST059)

Centerline | Design | Function | *old product name

- spring clamp terminal block, solderable
- centerline 10.00 mm, direction of connection 90°
- fittable without loss of poles
- color black
- eccentric lever

Technical data

cULus V / A / AWG 600 / 12 / 28 - 12

SEV 2.5 mm² 250 V / 10 A / T60

Overvoltage category	III	III	II
Pollution degree	3	2	2
Rated voltage	630 V	1600 V	1600 V
Rated test voltage	8.0 kV	8 kV	8.0 kV
Insulating material class	CTI 600		
Rated wiring solid wire	0.08 - 2.5 mm²		
Rated wiring stranded wire	0.08 - 2.5 mm²		
Rated wiring solid wire	AWG 28 - 12		
Rated wiring stranded wire	AWG 28 - 12		
Clearance and creepage distances	9 mm		
Solder pin dimension	1.0 x 0.8 mm		
Recommended pc board hole dia.	ø 1.4 mm		
Solder pin length	3.1 mm		
Protection category according to IEC 60529	IP 20		
Min. insul. strip length	6 mm		
Color	black		

Dimensional drawing

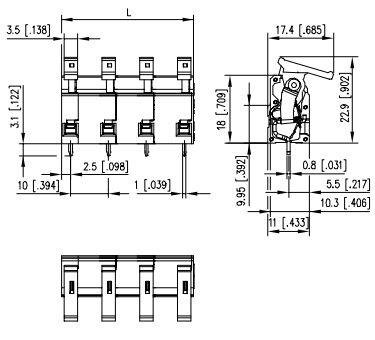

L = (Pole size - 1) * centerline + 5 mm (0.197 in.)

P/N

AST059 ☐

Complete the part number by adding the pole size.

	02	03	04	05	06	07	08
09	10	11	12				

(Information: page 21)

Standard pole sizes

Product family | Pole size | Color | Option

ST139 9xxDDNC *(AST139)

Centerline | Design | Function | *old product name

- spring clamp terminal block, solderable
- centerline 10.00 mm, direction of connection 45°
- fittable without loss of poles
- color gray
- eccentric lever

Technical data

cULus V / A / AWG 300 / 13 / 28 - 14

SEV 2.5 mm² 800 V / 24 A / T60

Overvoltage category	III	III	II
Pollution degree	3	2	2
Rated voltage	630 V	1600 V	1600 V
Rated test voltage	8.0 kV	8 kV	8.0 kV
Insulating material class	CTI 600		
Rated wiring solid wire	0.2 - 2.5 mm²		
Rated wiring stranded wire	0.2 - 2.5 mm²		
Rated wiring solid wire	AWG 28 - 12		
Rated wiring stranded wire	AWG 28 - 12		
Clearance and creepage distances	9 mm		
Solder pin dimension	0.8 x 1.0 mm		
Recommended pc board hole dia.	ø 1.4 mm		
Solder pin length	3.5 mm		
Protection category according to IEC 60529	IP 20		
Min. insul. strip length	6 mm		
Color	gray		

Dimensional drawing

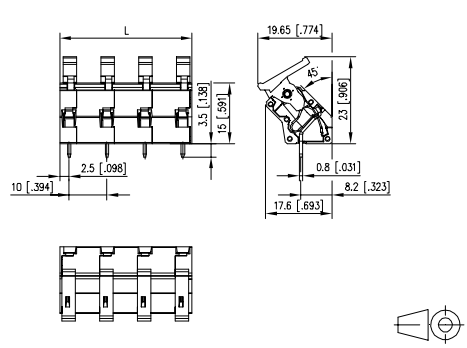

L = (Pole size - 1) * centerline + 5 mm (0.197 in.)

P/N

AST139 ☐

Complete the part number by adding the pole size.

	02	03	04	05	06	07	08
09	10	11	12				

(Information: page 21)

Standard pole sizes

Pin Headers

Product family	Pole size		Color	Option	
SP051	1	xx	V	G	N N *(ASP051)
Centerline		Design	Function		*old product name

- spring clamp terminal block, pluggable
- centerline 2.50 mm, direction of connection vertical 0°
- color green
- push-button, wire entry uncodeable side parallel to plug direction

Technical data

c UL us V / A / AWG 150 / 5 / 28 - 20

SEV 6 A / 80 V / 2.5 kV / 3 / 0.08 - 0.5 mm² / IEC 61984

Overvoltage category	III	III	II
Pollution degree	3	2	2
Rated voltage	80 V	320 V	320 V
Rated test voltage	2.5 kV	2.5 kV	2.5 kV
Insulating material class	CTI 600		
Rated wiring solid wire	0.08 - 0.5 mm²		
Rated wiring stranded wire	0.08 - 0.5 mm²		
Rated wiring solid wire	AWG 28 - 20		
Rated wiring stranded wire	AWG 28 - 20		
Clearance and creepage distances	1.7 mm		
Protection category according to IEC 60529	IP 20		
Min. insul. strip length	8 mm		
Color	green		

Dimensional drawing

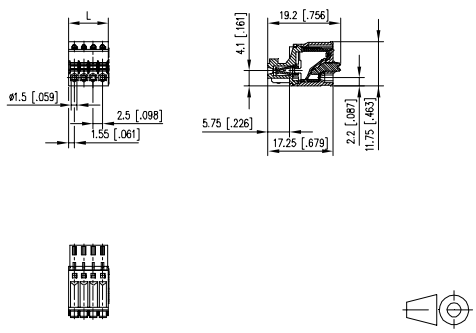

L = (Pole size - 1) * centerline + 3.1 mm (0.122 in.)

P/N

ASP051 ☐

Complete the part number by adding the pole size.

	02	03	04	05	06	07	08
09	10	11	12				

(Information: page 21)

■ **Standard pole sizes**

Pin Headers

Accessories

Pin Headers

Product family	Pole size	Color	Option
SP043	xx	V	B N N
Centerline	Design	Function	

*(ASP043)

*old product name

- spring clamp terminal block, pluggable
- centerline 3.50 mm, direction of connection vertical 0°
- color black
- eccentric lever, wire entry uncodeable side parallel to plug direction

Technical data

c UL us V / A / AWG	150 / 10 / 28 - 16		
SEV 10 A / 130 V / 2.5 kV / 3 / 0.08 - 1.5 mm² / IEC 61984			
Overvoltage category	III	III	II
Pollution degree	3	2	2
Rated voltage	160 V	320 V	320 V
Rated test voltage	2.5 kV	2.5 kV	2.5 kV
Insulating material class	CTI 400		
Rated wiring solid wire	0.08 - 1.5 mm²		
Rated wiring stranded wire	0.08 - 1.5 mm²		
Rated wiring solid wire	AWG 28 - 16		
Rated wiring stranded wire	AWG 28 - 16		
Clearance and creepage distances	2.3 mm		
Protection category according to IEC 60529	IP 20		
Min. insul. strip length	6 mm		
Color	black		

Dimensional drawing

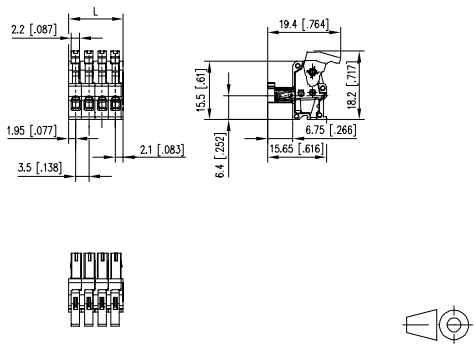

L = (Pole size - 1) * centerline + 4 mm (0.157 in.)

P/N

ASP043 ☐

Complete the part number by adding the pole size.

	02	03	04	05	06	07	08
09	10	11	12				

(Information: page 21)

Standard pole sizes

* Approval pending

Product family	Pole size	Color	Option
SW063	xx	V	B N N
Centerline	Design	Function	

- spring clamp terminal block, pluggable
- centerline 3.50 mm, direction of connection vertical 0°
- color black
- push-button, wire entry uncodeable side parallel to plug direction

Technical data

c UL us V / A / AWG	150 / 8 / 28 - 16		
SEV* 8 A / 130 V / 2.5 kV / 3 / 0.08 - 1.5 mm² / IEC 61984			
Overvoltage category	III	III	II
Pollution degree	3	2	2
Rated voltage	125 V	320 V	320 V
Rated test voltage	2.5 kV	2.5 kV	2.5 kV
Insulating material class	CTI 600		
Rated wiring solid wire	0.08 - 1.5 mm²		
Rated wiring stranded wire	0.08 - 1.5 mm²		
Rated wiring solid wire	AWG 28 - 16		
Rated wiring stranded wire	AWG 28 - 16		
Clearance and creepage distances	1.9 mm		
Protection category according to IEC 60529	IP 20		
Min. insul. strip length	9 mm		
Color	black		

Dimensional drawing

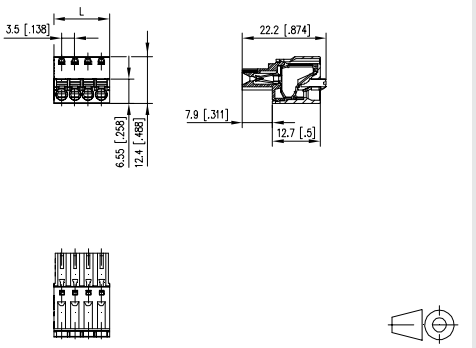

L = (Pole size - 1) * centerline + 4.3 mm (0.169 in.)

P/N

SW063 ☐ **VBNN**

Complete the part number by adding the pole size.

	02	03	04	05	06	07	08
09	10	11	12	13	14	15	16
17	18	19	20	21	22	23	24

(Information: page 21)

Standard pole sizes

Pin Headers

for **SP063xxVGNN** — Page

- PR043xxHBBN (Type 188) 146
- PT093xxHBBN (Type 342) 149
- PR043xxVBBN (Type 189) 151
- PT093xxVBBN (Type 343) 154

Pin Headers

for **SP063xxVGNF** — Page

- PR043xxHBBF (Type 388) 147
- PT093xxHBBF (Type 394) 149
- PR043xxVBBF (Type 389) 151

* Approval pending

Product family	Pole size	Color	Option
SP063	xx	V	GNN
Centerline	Design	Function	

*(ASP063) *old product name

- spring clamp terminal block, pluggable
- centerline 3.50 mm, direction of connection vertical 0°
- color green
- push-button, wire entry uncodeable side parallel to plug direction

Technical data

V / A / AWG	150 / 8 / 28 - 16		
8 A / 130 V / 2.5 kV / 3 / 0.08 - 1.5 mm² / IEC 61984			
Overvoltage category	III	III	II
Pollution degree	3	2	2
Rated voltage	125 V	320 V	320 V
Rated test voltage	2.5 kV	2.5 kV	2.5 kV
Insulating material class	CTI 600		
Rated wiring solid wire	0.08 - 1.5 mm²		
Rated wiring stranded wire	0.08 - 1.5 mm²		
Rated wiring solid wire	AWG 28 - 16		
Rated wiring stranded wire	AWG 28 - 16		
Clearance and creepage distances	1.9 mm		
Protection category according to IEC 60529	IP 20		
Min. insul. strip length	9 mm		
Color	green		

Dimensional drawing

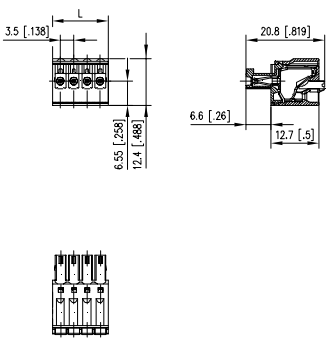

L = (Pole size - 1) * centerline + 4.3 mm (0.169 in.)

P/N
ASP063 □

Complete the part number by adding the pole size.

	02	03	04	05	06	07	08
09	10	11	12	13	14	15	16
17	18	19	20	21	22	23	24

(Information: page 21)

Standard pole sizes

* Approval pending

Product family	Pole size	Color	Option
SP063	xx	V	GNF
Centerline	Design	Function	

*(ASP083) *old product name

- spring clamp terminal block, pluggable
- centerline 3.50 mm, direction of connection vertical 0°
- color green, mounting flange
- push-button, wire entry uncodeable side parallel to plug direction

Technical data

V / A / AWG	150 / 8 / 28 - 16		
8 A / 130 V / 2.5 kV / 3 / 0.08 - 1.5 mm² / IEC 61984			
Overvoltage category	III	III	II
Pollution degree	3	2	2
Rated voltage	125 V	320 V	320 V
Rated test voltage	2.5 kV	2.5 kV	2.5 kV
Insulating material class	CTI 600		
Rated wiring solid wire	0.08 - 1.5 mm²		
Rated wiring stranded wire	0.08 - 1.5 mm²		
Rated wiring solid wire	AWG 28 - 16		
Rated wiring stranded wire	AWG 28 - 16		
Clearance and creepage distances	1.9 mm		
Protection category according to IEC 60529	IP 20		
Min. insul. strip length	9 mm		
Color	green		

Dimensional drawing

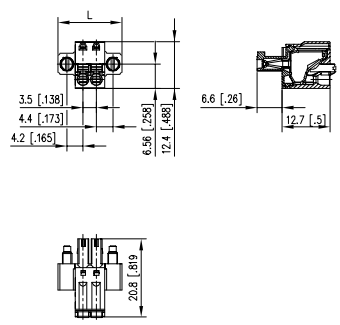

L = (Pole size - 1) * centerline + 13.50 mm (0.531 in.)

P/N
ASP083 □

Complete the part number by adding the pole size.

	02	03	04	05	06	07	08
09	10	11	12	13	14	15	16
17	18	19	20	21	22	23	24

(Information: page 21)

Standard pole sizes

Pin Headers

for **SP044xxVBNN** — **Page**

Accessories

Page

for **SP044xxVBNN**

Pin Headers

for **SP064xxVGNN** — **Page**

Accessories

Page

for **SP064xxVGNN**

Product family | Pole size | Color | Option

SP044xxVBNN *(ASP044)

Centerline | Design | Function | *old product name

- spring clamp terminal block, pluggable
- centerline 3.81 mm, direction of connection vertical 0°
- color black
- eccentric lever, wire entry uncodeable side parallel to plug direction

Technical data

cULus V / A	150 / 10		
SEV	10 A / 130 V / 2.5 kV / 3 / 0.08 - 1.5 mm² / IEC 61984		
Overvoltage category	III	III	II
Pollution degree	3	2	2
Rated voltage	160 V	320 V	320 V
Rated test voltage	2.5 kV	2.5 kV	2.5 kV
Insulating material class	CTI 400		
Rated wiring solid wire	0.08 - 1.5 mm²		
Rated wiring stranded wire	0.08 - 1.5 mm²		
Rated wiring solid wire	AWG 28 - 16		
Rated wiring stranded wire	AWG 28 - 16		
Clearance and creepage distances	2.6 mm		
Protection category according to IEC 60529	IP 20		
Min. insul. strip length	6 mm		
Color	black		

Dimensional drawing

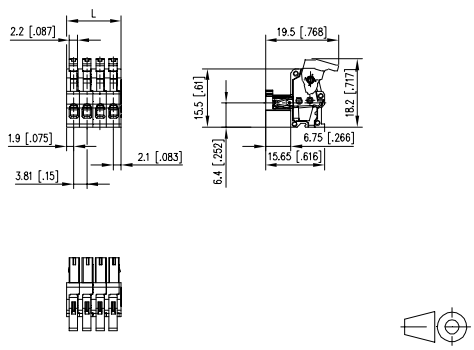

L = (Pole size - 1) * centerline + 4 mm (0.157 in.)

P/N

ASP044 ☐

Complete the part number by adding the pole size.

	02	03	04	05	06	07	08
09	10	11	12				

(Information: page 21)

Standard pole sizes

Product family | Pole size | Color | Option

SP064xxVGNN *(ASP064)

Centerline | Design | Function | *old product name

- spring clamp terminal block, pluggable
- centerline 3.81 mm, direction of connection vertical 0°
- color green
- push-button, wire entry uncodeable side parallel to plug direction

Technical data

cULus V / A / AWG	150 / 8 / 28 - 16		
SEV	9 A / 130 V / 2.5 kV / 3 / 0.08 - 1.5 mm² / IEC 61984		
Overvoltage category	III	III	II
Pollution degree	3	2	2
Rated voltage	125 V	320 V	320 V
Rated test voltage	2.5 kV	2.5 kV	2.5 kV
Insulating material class	CTI 600		
Rated wiring solid wire	0.08 - 1.5 mm²		
Rated wiring stranded wire	0.08 - 1.5 mm²		
Rated wiring solid wire	AWG 28 - 16		
Rated wiring stranded wire	AWG 28 - 16		
Clearance and creepage distances	1.9 mm		
Protection category according to IEC 60529	IP 20		
Min. insul. strip length	9 mm		
Color	green		

Dimensional drawing

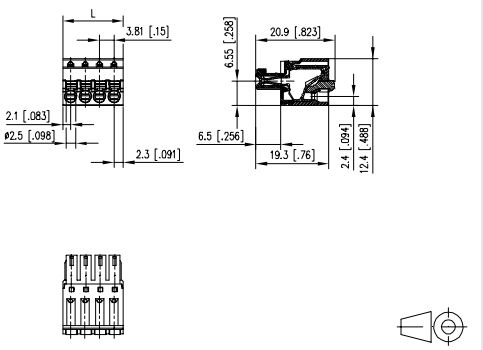

L = (Pole size - 1) * centerline + 4.6 mm (0.181 in.)

P/N

ASP064 ☐

Complete the part number by adding the pole size.

	02	03	04	05	06	07	08
09	10	11	12	13	14	15	16
17	18	19	20	21	22	23	24

(Information: page 21)

Standard pole sizes

Pin Headers

Accessories

Product family	Pole size	Color	Option
SP06	4xx	VGN	F
Centerline	Design	Function	

*(ASP084)
*old product name

- spring clamp terminal block, pluggable
- centerline 3.81 mm, direction of connection vertical 0°
- color green, mounting flange
- push-button, wire entry uncodeable side parallel to plug direction

Technical data

cULus V / A / AWG 150 / 8 / 28 - 16

SEV 9 A / 130 V / 2.5 kV / 3 / 0.08 - 1.5 mm² / IEC 61984

Overvoltage category	III	III	II
Pollution degree	3	2	2
Rated voltage	125 V	320 V	320 V
Rated test voltage	2.5 kV	2.5 kV	2.5 kV
Insulating material class	CTI 600		
Rated wiring solid wire	0.08 - 1.5 mm²		
Rated wiring stranded wire	0.08 - 1.5 mm²		
Rated wiring solid wire	AWG 28 - 16		
Rated wiring stranded wire	AWG 28 - 16		
Clearance and creepage distances	1.9 mm		
Protection category according to IEC 60529	IP 20		
Min. insul. strip length	9 mm		
Color	green		

Dimensional drawing

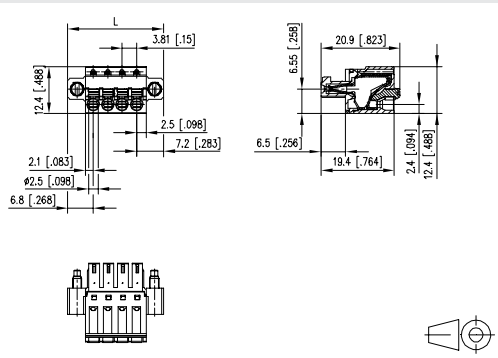

L = (Pole size - 1) * centerline + 13.96 mm (0.550 in.)

P/N
ASP084 ☐

Complete the part number by adding the pole size.

	02	03	04	05	06	07	08
09	10	11	12	13	14	15	16
17	18	19	20	21	22	23	24

(Information: page 21)

■ **Standard pole sizes**

Pin Headers

Accessories

Pin Headers

Product family	Pole size	Color	Option
SP02	5xx	H	DNC
	Centerline	Design	Function

*(ASP025)

*old product name

- spring clamp terminal block, pluggable
- centerline 5.00 mm, direction of connection 90°
- fittable without loss of poles
- color gray
- eccentric lever, wire entry perpendicular to plug direction

Technical data

cULus V / A / AWG	300 / 8 / 28 - 16		
SEV	10 A / 250 V / 2.5 kV / 3 / 0.08 - 1.5 mm² / IEC 61984		
Overvoltage category	III	III	II
Pollution degree	3	2	2
Rated voltage	250 V	500 V	500 V
Rated test voltage	4.0 kV	4 kV	4.0 kV
Insulating material class	CTI 400		
Rated wiring solid wire	0.08 - 1.5 mm²		
Rated wiring stranded wire	0.08 - 0.75 mm²		
Rated wiring solid wire	AWG 28 - 16		
Rated wiring stranded wire	AWG 28 - 18		
Clearance and creepage distances	3.7 mm		
Protection category according to IEC 60529	IP 20		
Min. insul. strip length	4 mm		
Color	gray		

Dimensional drawing

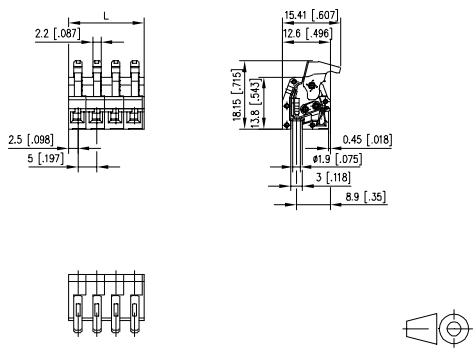

L = (Pole size - 1) * centerline + 5 mm (0.197 in.)

P/N

ASP025 ☐

Complete the part number by adding the pole size.

	02	03	04	05	06	07	08
09	10	11	12	13	14	15	16
17	18	19	20	21	22	23	24

(Information: page 21)

Standard pole sizes

Product family	Pole size	Color	Option
SP14	5xx	H	BNC
	Centerline	Design	Function

*(ASP145)

*old product name

- spring clamp terminal block, pluggable
- centerline 5.00 mm, direction of connection 90°
- fittable without loss of poles
- color black
- push-button, wire entry perpendicular or parallel to plug direction, three plugging directions

Technical data

cULus V / A / AWG	300 / 6 / 28 - 16		
SEV	13.5 A / 250 V / 4 kV / 3 / 0.08 - 1.5 mm² / IEC 61984		
Overvoltage category	III	III	II
Pollution degree	3	2	2
Rated voltage	250 V	630 V	630 V
Rated test voltage	2.5 kV	6 kV	4 kV
Insulating material class	CTI 225		
Rated wiring solid wire	0.08 - 1.5 mm²		
Rated wiring stranded wire	0.08 - 1.5 mm²		
Rated wiring solid wire	AWG 28 - 16		
Rated wiring stranded wire	AWG 28 - 16		
Clearance and creepage distances	3.2 mm		
Protection category according to IEC 60529	IP 20		
Min. insul. strip length	7 mm		
Color	black		

Dimensional drawing

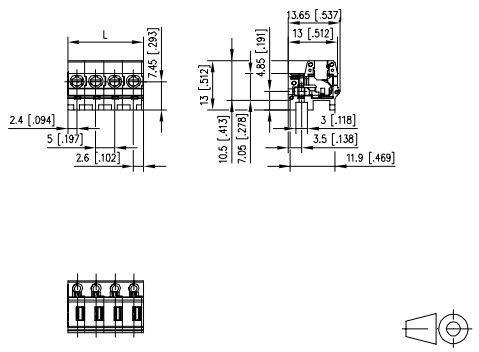

L = (Pole size - 1) * centerline + 5 mm (0.197 in.)

P/N

ASP145 ☐

Complete the part number by adding the pole size.

	02	03	04	05	06	07	08
09	10	11	12				

(Information: page 21)

Standard pole sizes

Pin Headers

for **SP155xxHBNC** — **Page**

Pin Headers

for **SP045xxVBNC** — **Page**

Accessories

for **SP045xxVBNC** — **Page**

Product family	Pole size	Color	Option
SP155	xx	H	B N C
Centerline	Design	Function	

***(ASP155)** *old product name

- spring clamp terminal block, pluggable
- centerline 5.00 mm, direction of connection 90°
- fittable without loss of poles
- color black
- push-button,wire entry perpendicular or parallel to plug direction, three plugging directions, clip system for mounting into a housing

Technical data

c UL us V / A / AWG — 300 / 6 / 28 - 16

SEV 13.5 A / 250 V / 4 kV / 3 / 0.08 - 1.5 mm² / IEC 61984

Overvoltage category	III	III	II
Pollution degree	3	2	2
Rated voltage	250 V	630 V	630 V
Rated test voltage	4.0 kV	4.0 kV	4 kV
Insulating material class	CTI 600		
Rated wiring solid wire	0.08 - 1.5 mm²		
Rated wiring stranded wire	0.08 - 1.5 mm²		
Rated wiring solid wire	AWG 28 - 16		
Rated wiring stranded wire	AWG 28 - 16		
Clearance and creepage distances	3.2 mm		
Protection category according to IEC 60529	IP 20		
Min. insul. strip length	7 mm		
Color	black		

Dimensional drawing

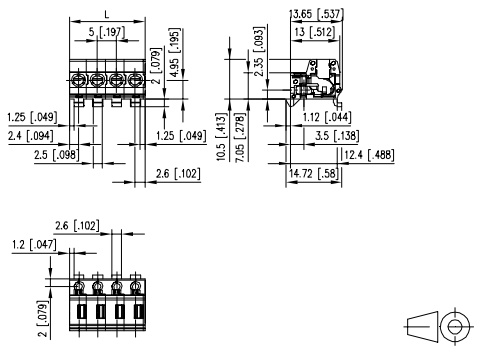

L = (Pole size - 1) * centerline + 5 mm (0.197 in.)

P/N **ASP155** ☐

Complete the part number by adding the pole size.

	02	03	04	05	06	07	08
09	10	11	12				

(Information: page 21)

Standard pole sizes

* Approval pending

Product family	Pole size	Color	Option
SP045	xx	V	B N C
Centerline	Design	Function	

***(ASP045)** *old product name

- spring clamp terminal block, pluggable
- centerline 5.00 mm, direction of connection vertical 0°
- fittable without loss of poles
- color black
- eccentric lever, wire entry uncodeable side parallel to plug direction

Technical data

c UL us V / A / AWG — 300 / 10 / 28 - 16

SEV* 10 A / 250 V / 4 kV / 3 / 0.08 - 1 mm² / IEC 61984

Overvoltage category	III	III	II
Pollution degree	3	2	2
Rated voltage	250 V	500 V	500 V
Rated test voltage	4.0 kV	4 kV	4.0 kV
Insulating material class	CTI 400		
Rated wiring solid wire	0.08 - 1.5 mm²		
Rated wiring stranded wire	0.08 - 1.5 mm²		
Rated wiring solid wire	AWG 28 - 16		
Rated wiring stranded wire	AWG 28 - 16		
Clearance and creepage distances	4 mm		
Protection category according to IEC 60529	IP 20		
Min. insul. strip length	4 mm		
Color	black		

Dimensional drawing

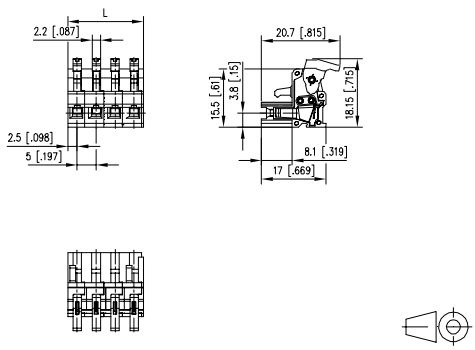

L = (Pole size - 1) * centerline + 5 mm (0.197 in.)

P/N **ASP045** ☐

Complete the part number by adding the pole size.

	02	03	04	05	06	07	08
09	10	11	12	13	14	15	16
17	18	19	20	21	22	23	24

(Information: page 21)

Standard pole sizes

Pin Headers

for **SP065xxVBNC** — Page

Accessories

Page

for **SP065xxVBNC**

Pin Headers

for **SP065xxVBPC** — Page

Accessories

Page

for **SP065xxVBPC**

* Approval pending

Product family	Pole size	Color	Option
SP065	xx	V	BNC
Centerline		Design	Function

- spring clamp terminal block, pluggable
- centerline 5.00 mm, direction of connection vertical 0°
- fittable without loss of poles
- color black
- push-button, wire entry uncodeable side parallel to plug direction

Technical data

V / A / AWG	300 / 12 / 28 - 12		
12 A / 250 V / 4 kV / 3 / 0.08 - 2.5 mm² / IEC 61984			
Overvoltage category	III	III	II
Pollution degree	3	2	2
Rated voltage	250 V	630 V	630 V
Rated test voltage	4.0 kV	4.0 kV	4 kV
Insulating material class	CTI 600		
Rated wiring solid wire	0.08 - 2.5 mm²		
Rated wiring stranded wire	0.08 - 2.5 mm²		
Rated wiring solid wire	AWG 28 - 12		
Rated wiring stranded wire	AWG 28 - 12		
Clearance and creepage distances	3.5 mm		
Protection category according to IEC 60529	IP 20		
Min. insul. strip length	10 mm		
Color	black		

Dimensional drawing

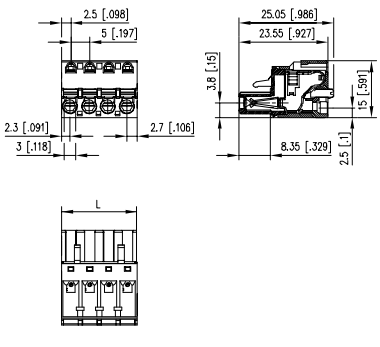

L = (Pole size - 1) * centerline + 5 mm (0.197 in.)

P/N

SP065 ☐ VBNC

Complete the part number by adding the pole size.

	02	03	04	05	06	07	08
09	10	11	12	13	14	15	16
17	18	19	20	21	22	23	24

(Information: page 21)

Standard pole sizes

* Approval pending

Product family	Pole size	Color	Option
SP065	xx	V	BPC
Centerline		Design	Function

- spring clamp terminal block, pluggable
- centerline 5.00 mm, direction of connection vertical 0°
- fittable without loss of poles
- color black
- finger push-button, wire entry uncodeable side parallel to plug direction

Technical data

V / A / AWG	300 / 12 / 28 - 12		
12 A / 250 V / 4 kV / 3 / 0.08 - 2.5 mm² / IEC 61984			
Overvoltage category	III	III	II
Pollution degree	3	2	2
Rated voltage	250 V	630 V	630 V
Rated test voltage	4.0 kV	4.0 kV	4 kV
Insulating material class	CTI 600		
Rated wiring solid wire	0.08 - 2.5 mm²		
Rated wiring stranded wire	0.08 - 2.5 mm²		
Rated wiring solid wire	AWG 28 - 12		
Rated wiring stranded wire	AWG 28 - 12		
Clearance and creepage distances	3.5 mm		
Protection category according to IEC 60529	IP 20		
Min. insul. strip length	10 mm		
Color	black		

Dimensional drawing

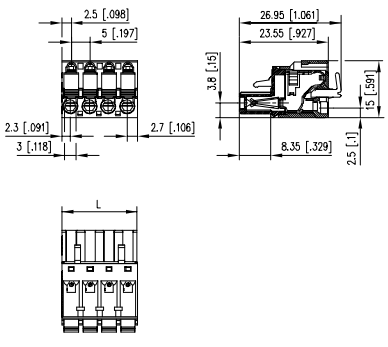

L = (Pole size - 1) * centerline + 5 mm (0.197 in.)

P/N

SP065 ☐ VBPC

Complete the part number by adding the pole size.

	02	03	04	05	06	07	08
09	10	11	12	13	14	15	16
17	18	19	20	21	22	23	24

(Information: page 21)

Standard pole sizes

Pin Headers

for SP065xxVBNF	Page
PR065xxHBBF (Type 396)	160
PT115xxHBBF (Type 336)	165
PR065xxVBBF (Type 397)	170
PT115xxVBBF (Type 335)	174

Accessories

for SP065xxVBNF	Page
700025	298

Pin Headers

for SP065xxVBPF	Page
PR065xxHBBF (Type 396)	160
PT115xxHBBF (Type 336)	165
PR065xxVBBF (Type 397)	170
PT115xxVBBF (Type 335)	174

Accessories

for SP065xxVBPF	Page
700025	298

* Approval pending

Product family	Pole size	Color	Option
SP065	xx	V	BNF
Centerline		Design	Function

- spring clamp terminal block, pluggable
- centerline 5.00 mm, direction of connection vertical 0°
- color black, mounting flange
- push-button, wire entry uncodeable side parallel to plug direction

Technical data

V / A / AWG	300 / 12 / 28 - 12		
12 A / 250 V / 4 kV / 3 / 0.08 - 2.5 mm² / IEC 61984			
Overvoltage category	III	III	II
Pollution degree	3	2	2
Rated voltage	250 V	630 V	630 V
Rated test voltage	4.0 kV	4.0 kV	4 kV
Insulating material class	CTI 600		
Rated wiring solid wire	0.08 - 2.5 mm²		
Rated wiring stranded wire	0.08 - 2.5 mm²		
Rated wiring solid wire	AWG 28 - 12		
Rated wiring stranded wire	AWG 28 - 12		
Clearance and creepage distances	3.5 mm		
Protection category according to IEC 60529	IP 20		
Min. insul. strip length	10 mm		
Color	black		

Dimensional drawing

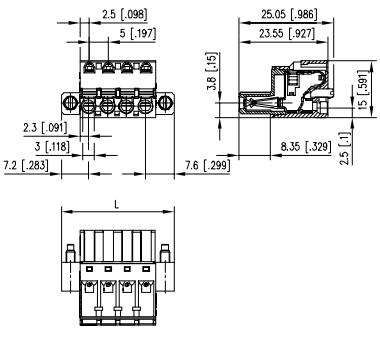

L = (Pole size - 1) * centerline + 14.8 mm (0.583 in.)

P/N

SP065 ☐ VBNF

Complete the part number by adding the pole size.

	02	03	04	05	06	07	08
09	10	11	12	13	14	15	16
17	18	19	20	21	22	23	24

(Information: page 21)

Standard pole sizes

* Approval pending

Product family	Pole size	Color	Option
SP065	xx	V	BPF
Centerline		Design	Function

- spring clamp terminal block, pluggable
- centerline 5.00 mm, direction of connection vertical 0°
- color black, mounting flange
- finger push-button, wire entry uncodeable side parallel to plug direction

Technical data

V / A / AWG	300 / 12 / 28 - 12		
12 A / 250 V / 4 kV / 3 / 0.08 - 2.5 mm² / IEC 61984			
Overvoltage category	III	III	II
Pollution degree	3	2	2
Rated voltage	250 V	630 V	630 V
Rated test voltage	4.0 kV	4.0 kV	4 kV
Insulating material class	CTI 600		
Rated wiring solid wire	0.08 - 2.5 mm²		
Rated wiring stranded wire	0.08 - 2.5 mm²		
Rated wiring solid wire	AWG 28 - 12		
Rated wiring stranded wire	AWG 28 - 12		
Clearance and creepage distances	3.5 mm		
Protection category according to IEC 60529	IP 20		
Min. insul. strip length	10 mm		
Color	black		

Dimensional drawing

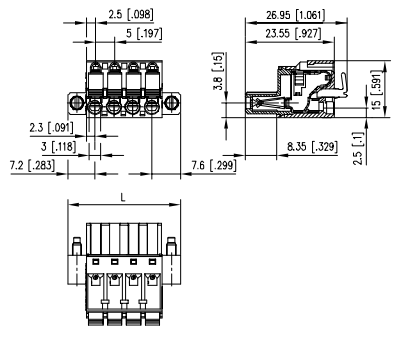

L = (Pole size - 1) * centerline + 14.8 mm (0.583 in.)

P/N

SP065 ☐ VBPF

Complete the part number by adding the pole size.

	02	03	04	05	06	07	08
09	10	11	12	13	14	15	16
17	18	19	20	21	22	23	24

(Information: page 21)

Standard pole sizes

Pin Headers

Accessories

* Approval pending

Product family	Pole size	Color	Option
SP995	xx	V	BNC
Centerline		Design	Function

- spring clamp terminal block, pluggable
- centerline 5.00 mm, direction of connection vertical 0°
- fittable without loss of poles
- color black
- two connections per pole

Technical data

V / A / AWG	250 / 10.5 / 24 - 14		
10.5 A / 250 V / 4 kV / 3 / 0.2 - 2.5 mm² / IEC 61984			
Overvoltage category	III	III	II
Pollution degree	3	2	2
Rated voltage	250.0 V	630.0 V	630.0 V
Rated test voltage	4.0 kV	4.0 kV	4 kV
Insulating material class	CTI 600		
Rated wiring solid wire	0.2 - 2.5 mm²		
Rated wiring stranded wire	0.2 - 2.5 mm²		
Rated wiring solid wire	AWG 24 - 14		
Rated wiring stranded wire	AWG 24 - 12		
Clearance and creepage distances	3.2 mm		
Protection category according to IEC 60529	IP 20		
Min. insul. strip length	9 mm		
Color	black		

Dimensional drawing

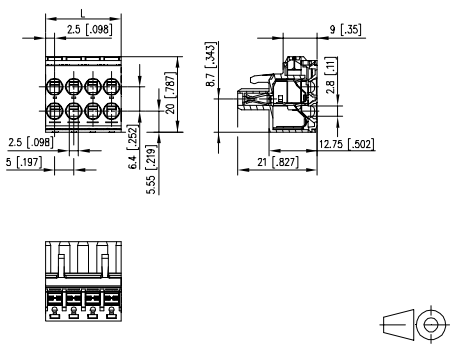

L = (Pole size - 1) * centerline + 5 mm (0.197 in.)

P/N

SP995 ☐ VBNC

Complete the part number by adding the pole size.

	02	03	04	06	08		

(Information: page 21)

■ Standard pole sizes

Pin Headers

for **SP046xxVBNC** — Page

Accessories

for **SP046xxVBNC** — Page

Pin Headers

for **SP066xxVBNC** — Page

Accessories

for **SP066xxVBNC** — Page

* Approval pending

Product family	Pole size	Color	Option
SP046	xx	V	BNC
Centerline	Design	Function	

***(ASP046)** *old product name

- spring clamp terminal block, pluggable
- centerline 5.08 mm, direction of connection vertical 0°
- fittable without loss of poles
- color black
- eccentric lever, wire entry uncodeable side parallel to plug direction

Technical data

cULus V / A / AWG 300 / 10 / 28 - 16

SEV* 10 A / 250 V / 4 kV / 3 / 0.08 - 1 mm² / IEC 61984

Overvoltage category	III	III	II
Pollution degree	3	2	2
Rated voltage	250 V	500 V	500 V
Rated test voltage	4.0 kV	4 kV	4.0 kV
Insulating material class	CTI 400		
Rated wiring solid wire	0.08 - 1.5 mm²		
Rated wiring stranded wire	0.08 - 1.5 mm²		
Rated wiring solid wire	AWG 28 - 16		
Rated wiring stranded wire	AWG 28 - 16		
Clearance and creepage distances	4 mm		
Protection category according to IEC 60529	IP 20		
Min. insul. strip length	4 mm		
Color	black		

Dimensional drawing

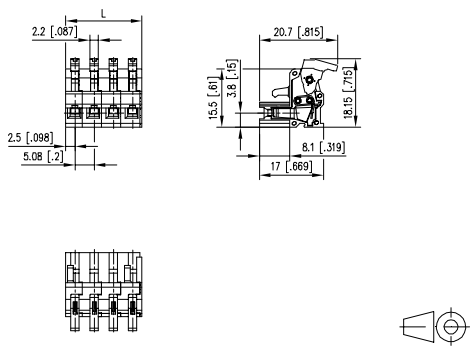

L = (Pole size - 1) * centerline + 5 mm (0.197 in.)

P/N **ASP046** ☐

Complete the part number by adding the pole size.

	02	03	04	05	06	07	08
09	10	11	12	13	14	15	16
17	18	19	20	21	22	23	24

(Information: page 21)

■ **Standard pole sizes**

* Approval pending

Product family	Pole size	Color	Option
SP066	xx	V	BNC
Centerline	Design	Function	

- spring clamp terminal block, pluggable
- centerline 5.08 mm, direction of connection vertical 0°
- fittable without loss of poles
- color black
- push-button, wire entry uncodeable side parallel to plug direction

Technical data

cULus V / A / AWG 300 / 12 / 28 - 12

SEV* 12 A / 250 V / 4 kV / 3 / 0.08 - 2.5 mm² / IEC 61984

Overvoltage category	III	III	II
Pollution degree	3	2	2
Rated voltage	250 V	630 V	630 V
Rated test voltage	4.0 kV	4.0 kV	4 kV
Insulating material class	CTI 600		
Rated wiring solid wire	0.08 - 2.5 mm²		
Rated wiring stranded wire	0.08 - 2.5 mm²		
Rated wiring solid wire	AWG 28 - 12		
Rated wiring stranded wire	AWG 28 - 12		
Clearance and creepage distances	3.58 mm		
Protection category according to IEC 60529	IP 20		
Min. insul. strip length	10 mm		
Color	black		

Dimensional drawing

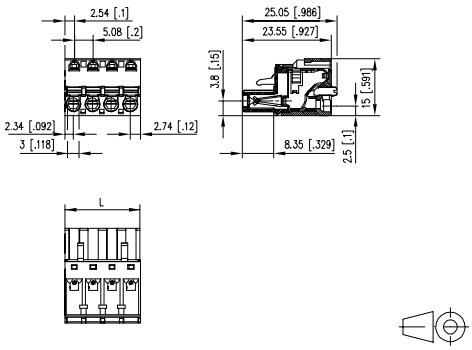

L = (Pole size - 1) * centerline + 5.08 mm (0.200 in.)

P/N **SP066** ☐ **VBNC**

Complete the part number by adding the pole size.

	02	03	04	05	06	07	08
09	10	11	12	13	14	15	16
17	18	19	20	21	22	23	24

(Information: page 21)

■ **Standard pole sizes**

Pin Headers

for SP066xxVBPC	Page
PR066xxHBEC (Type 478)	176
PR066xxVBEC (Type 479)	182
PT116xxVBEC (Type 219)	183
PT116xxVBBN (Type 220)	184

Accessories

for SP066xxVBPC	Page
700025	298

Pin Headers

for SP066xxVBNF	Page
PT116xxHBBF (Type 236)	178
PR066xxHBBF (Type 398)	181
PR066xxVBBF (Type 399)	181
PT116xxVBBF (Type 235)	184

Accessories

for SP066xxVBNF	Page
700025	298

* Approval pending

Product family	Pole size	Color	Option
SP066	6xx	VB	PC
Centerline	Design	Function	

- spring clamp terminal block, pluggable
- centerline 5.08 mm, direction of connection vertical 0°
- fittable without loss of poles
- color black
- finger push-button, wire entry uncodeable side parallel to plug direction

Technical data

V / A / AWG	300 / 12 / 28 - 12		
12 A / 250 V / 4 kV / 3 / 0.08 - 2.5 mm² / IEC 61984			
Overvoltage category	III	III	II
Pollution degree	3	2	2
Rated voltage	250 V	630 V	630 V
Rated test voltage	4.0 kV	4.0 kV	4 kV
Insulating material class	CTI 600		
Rated wiring solid wire	0.08 - 2.5 mm²		
Rated wiring stranded wire	0.08 - 2.5 mm²		
Rated wiring solid wire	AWG 28 - 12		
Rated wiring stranded wire	AWG 28 - 12		
Clearance and creepage distances	3.58 mm		
Protection category according to IEC 60529	IP 20		
Min. insul. strip length	10 mm		
Color	black		

Dimensional drawing

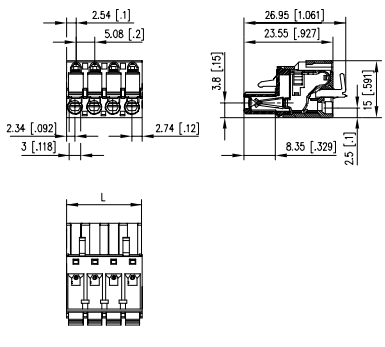

L = (Pole size - 1) * centerline + 5.08 mm (0.200 in.)

P/N

SP066 ☐ VBPC

Complete the part number by adding the pole size.

	02	03	04	05	06	07	08
09	10	11	12	13	14	15	16
17	18	19	20	21	22	23	24

(Information: page 21)

■ Standard pole sizes

* Approval pending

Product family	Pole size	Color	Option
SP066	6xx	VB	NF
Centerline	Design	Function	

- spring clamp terminal block, pluggable
- centerline 5.08 mm, direction of connection vertical 0°
- color black, mounting flange
- push-button, wire entry uncodeable side parallel to plug direction

Technical data

V / A / AWG	300 / 12 / 28 - 12		
12 A / 250 V / 4 kV / 3 / 0.08 - 2.5 mm² / IEC 61984			
Overvoltage category	III	III	II
Pollution degree	3	2	2
Rated voltage	250 V	630 V	630 V
Rated test voltage	4.0 kV	4.0 kV	4 kV
Insulating material class	CTI 600		
Rated wiring solid wire	0.08 - 2.5 mm²		
Rated wiring stranded wire	0.08 - 2.5 mm²		
Rated wiring solid wire	AWG 28 - 12		
Rated wiring stranded wire	AWG 28 - 12		
Clearance and creepage distances	3.58 mm		
Protection category according to IEC 60529	IP 20		
Min. insul. strip length	10 mm		
Color	black		

Dimensional drawing

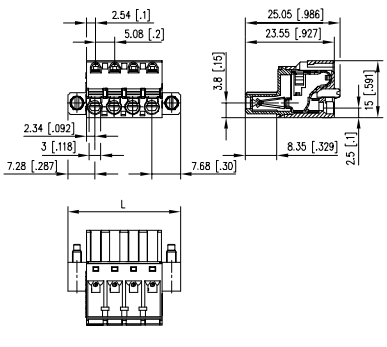

L = (Pole size - 1) * centerline + 14.96 mm (0.589 in.)

P/N

SP066 ☐ VBNF

Complete the part number by adding the pole size.

	02	03	04	05	06	07	08
09	10	11	12	13	14	15	16
17	18	19	20	21	22	23	24

(Information: page 21)

■ Standard pole sizes

Pin Headers

for SP066xxVBPF	Page
PT116xxHBBF (Type 236)	178
PR066xxHBBF (Type 398)	181
PT116xxVBBF (Type 235)	184

Accessories

for SP066xxVBPF	Page
700025	298

* Approval pending

Product family	Pole size	Color	Option
SP066	6xx	V B	P F
Centerline		Design	Function

- spring clamp terminal block, pluggable
- centerline 5.08 mm, direction of connection vertical 0°
- color black, mounting flange
- finger push-button, wire entry uncodeable side parallel to plug direction

Technical data

cULus V / A / AWG 300 / 12 / 28 - 12

SEV* 12 A / 250 V / 4 kV / 3 / 0.08 - 2.5 mm² / IEC 61984

Overvoltage category	III	III	II
Pollution degree	3	2	2
Rated voltage	250 V	630 V	630 V
Rated test voltage	4.0 kV	4.0 kV	4 kV
Insulating material class	CTI 600		
Rated wiring solid wire	0.08 - 2.5 mm²		
Rated wiring stranded wire	0.08 - 2.5 mm²		
Rated wiring solid wire	AWG 28 - 12		
Rated wiring stranded wire	AWG 28 - 12		
Clearance and creepage distances	3.58 mm		
Protection category according to IEC 60529	IP 20		
Min. insul. strip length	10 mm		
Color	black		

Dimensional drawing

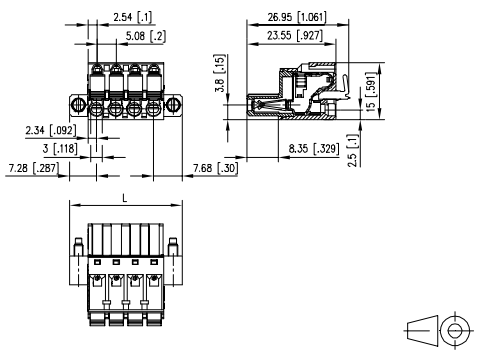

L = (Pole size - 1) * centerline + 14.96 mm (0.589 in.)

P/N

SP066 ☐ VBPF

Complete the part number by adding the pole size.

	02	03	04	05	06	07	08
09	10	11	12	13	14	15	16
17	18	19	20	21	22	23	24

(Information: page 21)

■ Standard pole sizes

Pin Headers

for SP049xxVBNC	Page
PT119xxVBBN (Type 320)	190

Accessories

for SP049xxVBNC	Page
700025	298

Pin Headers

for SP129xxVBNF	Page
PT119xxHBBF (Type 336)	189
PT119xxVBBF (Type 335)	191

Accessories

for SP129xxVBNF	Page
700025	298

* Approval pending

Product family	Pole size	Color	Option
SP049	xx	V	B N C
Centerline	Design	Function	

***(ASP049)** *old product name

- spring clamp terminal block, pluggable
- centerline 10.00 mm, direction of connection vertical 0°
- fittable without loss of poles
- color black
- eccentric lever, wire entry uncodeable side parallel to plug direction

Technical data

cULus V / A / AWG	300 / 8 / 28 - 16		
SEV*	10 A / 630 V / 6 kV / 3 / 0.08 - 1 mm² / IEC 61984		
Overvoltage category	III	III	II
Pollution degree	3	2	2
Rated voltage	630 V	1250 V	1250 V
Rated test voltage	8.0 kV	8 kV	8.0 kV
Insulating material class	CTI 400		
Rated wiring solid wire	0.08 - 1.5 mm²		
Rated wiring stranded wire	0.08 - 1 mm²		
Rated wiring solid wire	AWG 28 - 16		
Rated wiring stranded wire	AWG 28 - 16		
Clearance and creepage distances	9 mm		
Protection category according to IEC 60529	IP 20		
Min. insul. strip length	4 mm		
Color	black		

Dimensional drawing

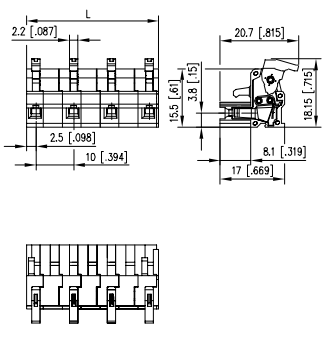

L = (Pole size - 1) * centerline + 5 mm (0.197 in.)

P/N

ASP049 ☐

Complete the part number by adding the pole size.

	02	03	04	05	06	07	08
09	10	11	12				

(Information: page 21)

Standard pole sizes

* Approval pending

Product family	Pole size	Color	Option
SP129	xx	V	B N F
Centerline	Design	Function	

***(ASP129)** *old product name

- spring clamp terminal block, pluggable
- centerline 10.00 mm, direction of connection vertical 0°
- color black, mounting flange
- eccentric lever, wire entry uncodeable side parallel to plug direction

Technical data

cULus V / A / AWG	300 / 10 / 28 - 12		
SEV*	12 A / 630 V / 4 kV / 3 / 0.08 - 2.5 mm² / IEC 61984		
Overvoltage category	III	III	II
Pollution degree	3	2	2
Rated voltage	800 V	1600 V	1600 V
Rated test voltage	8.0 kV	8 kV	8.0 kV
Insulating material class	CTI 400		
Rated wiring solid wire	0.08 - 2.5 mm²		
Rated wiring stranded wire	0.08 - 2.5 mm²		
Rated wiring solid wire	AWG 28 - 12		
Rated wiring stranded wire	AWG 28 - 12		
Clearance and creepage distances	11 mm		
Protection category according to IEC 60529	IP 20		
Min. insul. strip length	9 mm		
Color	black		

Dimensional drawing

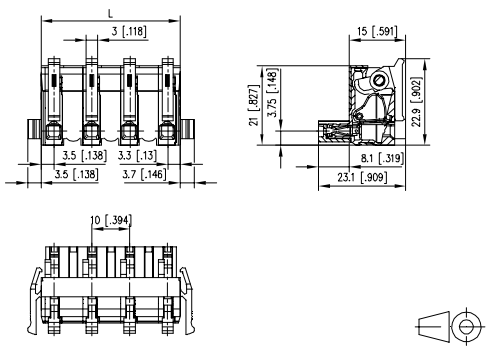

L = (Pole size - 1) * centerline + 6.8 mm (0.268 in.)

P/N

ASP129 ☐

Complete the part number by adding the pole size.

	02	03	04				

(Information: page 21)

Standard pole sizes

Pin Headers

for SP04AxxVBNC	Page
PT11AxxHBEC (Type 229)	192
PT11AxxHBBN (Type 230)	192
PT11AxxVBEC (Type 219)	193
PT11AxxVBBN (Type 220)	194

Accessories

for SP04AxxVBNC	Page
700025	298

Product family | Pole size | Color | Option

SP04AxxVBNC *(ASP04A)

Centerline | Design | Function

*old product name

- spring clamp terminal block, pluggable
- centerline 10.16 mm, direction of connection vertical 0°
- fittable without loss of poles
- color black
- eccentric lever, wire entry uncodeable side parallel to plug direction

Technical data

	0.08 - 1.5 mm² AWG 28 - 16 / 10 A		
Overvoltage category	III	III	II
Pollution degree	3	2	2
Rated voltage	630 V	1250 V	1250 V
Rated test voltage	8.0 kV	8 kV	8.0 kV
Insulating material class	CTI 400		
Rated wiring solid wire	0.08 - 1.5 mm²		
Rated wiring stranded wire	0.08 - 1.5 mm²		
Rated wiring solid wire	AWG 28 - 16		
Rated wiring stranded wire	AWG 28 - 16		
Clearance and creepage distances	9.16 mm		
Protection category according to IEC 60529	IP 20		
Min. insul. strip length	4 mm		
Color	black		

Dimensional drawing

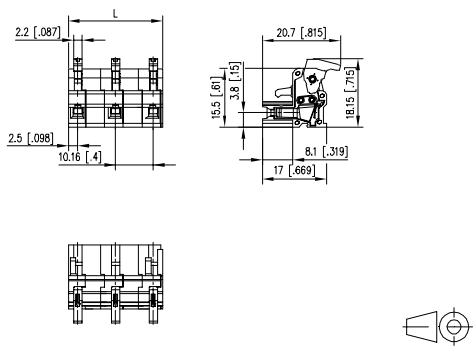

L = (Pole size - 1) * centerline + 5 mm (0.197 in.)

P/N

ASP04A ☐

Complete the part number by adding the pole size.

	02	03	04	05	06	07	08
09	10	11	12				

(Information: page 21)

■ **Standard pole sizes**

Product family	Pole size	Color	Option
SC303	xx	H	BNN
Centerline		Design	Function

- spring clamp terminal block, pluggable
- centerline 3.50 mm, direction of connection vertical 90°
- color black

Technical data

V / A / AWG	150 / 4 / 28 - 16		
1.5 mm²	130 V / 4A / T60		
Overvoltage category	III	III	II
Pollution degree	3	2	2
Rated voltage	160 V	400 V	400 V
Rated test voltage	2.5 kV	2.5 kV	2.5 kV
Insulating material class	CTI 600		
Rated wiring solid wire	0.08 - 1.5 mm²		
Rated wiring stranded wire	0.08 - 1.5 mm²		
Rated wiring solid wire	AWG 28 - 16		
Rated wiring stranded wire	AWG 28 - 16		
Clearance and creepage distances	2.4 mm		
Protection category according to IEC 60529	IP00		
Min. insul. strip length	7.5 mm		
Color	black		

Dimensional drawing

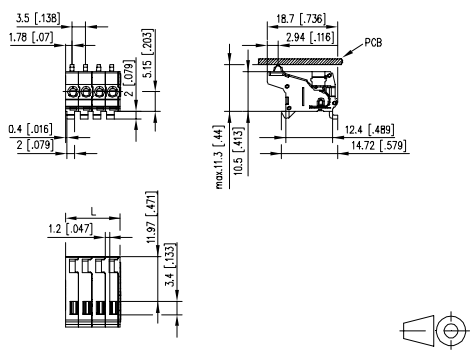

L = (Pole size - 1) * centerline + 4,5 mm (0.177 in.)

P/N

SC303 ☐ HBNN

Complete the part number by adding the pole size.

	02	03	04	05	06	07	08
09	10	11	12				

(Information: page 21)

Standard pole sizes

Product family	Pole size	Color	Option
SL303	xx	H	BNN
Centerline		Design	Function

- spring clamp terminal block, solderable
- centerline 3.50 mm, direction of connection vertical 90°
- color black

Technical data

V / A / AWG	150 / 4 / 28 - 16		
1.5 mm²	130 V / 4A / T60		
Overvoltage category	III	III	II
Pollution degree	3	2	2
Rated voltage	160 V	400 V	400 V
Rated test voltage	2.5 kV	2.5 kV	2.5 kV
Insulating material class	CTI 600		
Rated wiring solid wire	0.08 - 1.5 mm²		
Rated wiring stranded wire	0.08 - 1.5 mm²		
Rated wiring solid wire	AWG 28 - 16		
Rated wiring stranded wire	AWG 28 - 16		
Clearance and creepage distances	2.4 mm		
Solder pin dimension	3,95 mm		
Protection category according to IEC 60529	IP00		
Min. insul. strip length	7.5 mm		
Color	black		

Dimensional drawing

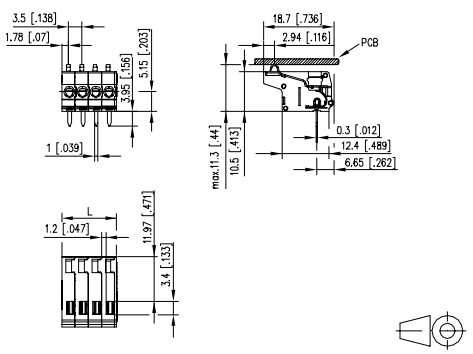

L = (Pole size - 1) * centerline + 4,5 mm (0.177 in.)

P/N

SL303 ☐ HBNN

Complete the part number by adding the pole size.

	02	03	04	05	06	07	08
09	10	11	12				

(Information: page 21)

Standard pole sizes

* Approval pending

Product family	Pole size	Color	Option
SC305	xx	H	BNN
Centerline		Design	Function

- spring clamp terminal block, pluggable
- centerline 5.00 mm, direction of connection vertical 0°
- color black

Technical data

V / A / AWG 250 / 4 / 28 - 16

4 A / 250 V / 4 kV / 3 / 0.08 - 1.5 mm² / IEC 61984

Overvoltage category	III	III	II
Pollution degree	3	2	2
Rated voltage	250 V	630 V	630 V
Rated test voltage	4.0 kV	4.0 kV	4 kV
Insulating material class	CTI 600		
Rated wiring solid wire	0.08 - 1.5 mm²		
Rated wiring stranded wire	0.08 - 1.5 mm²		
Rated wiring solid wire	AWG 28 - 16		
Rated wiring stranded wire	AWG 28 - 16		
Clearance and creepage distances	3.2 mm		
Protection category according to IEC 60529	IP 20		
Min. insul. strip length	7.5 mm		
Color	black		

Dimensional drawing

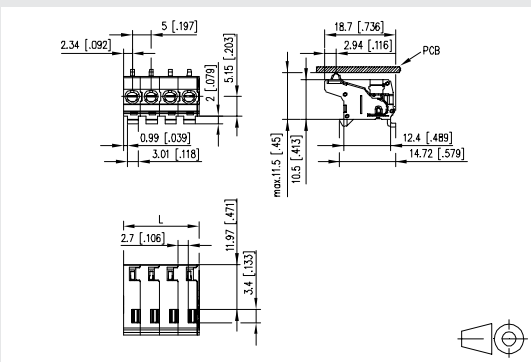

L = (Pole size - 1) * centerline + 5 mm (0.197 in.)

P/N

SC305 ☐ HBNN

Complete the part number by adding the pole size.

	02	03	04	05	06	07	08
09	10	11	12				

(Information: page 21)

Standard pole sizes

* Approval pending

Product family	Pole size	Color	Option
SL305	xx	H	BNN
Centerline		Design	Function

- spring clamp terminal block, solderable
- centerline 5.00 mm, direction of connection vertical 0°
- color black

Technical data

V / A / AWG 250 / 4 / 28 - 16

0.08 - 1.5 mm² 250 V / 4 kV / 4 A

Overvoltage category	III	III	II
Pollution degree	3	2	2
Rated voltage	250 V	630 V	630 V
Rated test voltage	4.0 kV	4.0 kV	4 kV
Insulating material class	CTI 600		
Rated wiring solid wire	0.08 - 1.5 mm²		
Rated wiring stranded wire	0.08 - 1.5 mm²		
Rated wiring solid wire	AWG 28 - 16		
Rated wiring stranded wire	AWG 28 - 16		
Clearance and creepage distances	3.2 mm		
Solder pin dimension	1.0 x 0.3 mm		
Recommended pc board hole dia.	ø 1.2 mm		
Solder pin length	3.95 mm		
Protection category according to IEC 60529	IP 20		
Min. insul. strip length	7.5 mm		
Color	black		

Dimensional drawing

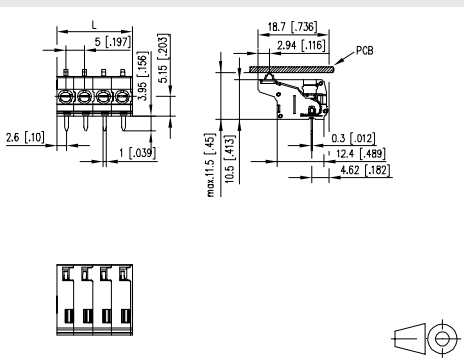

L = (Pole size - 1) * centerline + 5 mm (0.197 in.)

P/N

SL305 ☐ HBNN

Complete the part number by adding the pole size.

	02	03	04	05	06	07	08
09	10	11	12				

(Information: page 21)

Standard pole sizes

SM99S

- spring clamp terminal block, SMT solderable
- direction of connection 90°
- fittable without loss of poles
- color black
- Tape & Reel packaging
- finger push-button
- test point and wire connection indicator
- Variants: black, creme white, yellow, green, red, blue

Technical data

	A / AWG	9 / 24 - 16
	0.2 - 0.75 mm²	9 A
Rated wiring solid wire		0.2 - 1.5 mm²
Rated wiring stranded wire		0.2 - 1.5 mm²
Rated wiring solid wire		AWG 24 - 16
Rated wiring stranded wire		AWG 24 - 16
Protection category according to IEC 60529		IP 20
Min. insul. strip length		7 mm
Color		black

Drill pattern

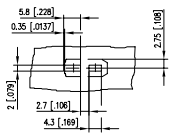

Dimensional drawing

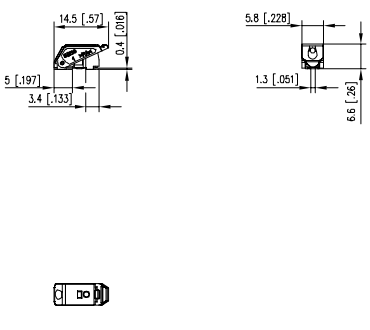

P/N	Color	Feature 1	Feature 2	EAN
SM99S01VBNN00G7	black			4250184193647
SM99S01VBNN01G7	white			4250184193654
SM99S01VBNN02G7	yellow			4250184193661
SM99S01VBNN03G7	green			4250184193722
SM99S01VBNN04G7	red			4250184193678
SM99S01VBNN05G7	blue			4250184193715

SR99S

- spring clamp terminal block, THR solderable, double solder pins
- direction of connection 90°
- fittable without loss of poles
- color black
- Tape & Reel packaging
- finger push-button
- test point and wire connection indicator
- Variants: black, creme white, yellow, green, red, blue

Technical data

	A / AWG	9 / 24 - 16
	0.2 - 0.75 mm²	9 A
Rated wiring solid wire		0.2 - 1.5 mm²
Rated wiring stranded wire		0.2 - 1.5 mm²
Rated wiring solid wire		AWG 24 - 16
Rated wiring stranded wire		AWG 24 - 16
Solder pin dimension		2 x 1.3 x 0.4 mm
Recommended pc board hole dia.		ø 1.6 mm
Solder pin length		2.4 mm
Protection category according to IEC 60529		IP 20
Min. insul. strip length		7 mm
Color		black

Drill pattern

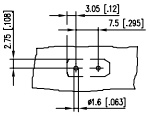

Dimensional drawing

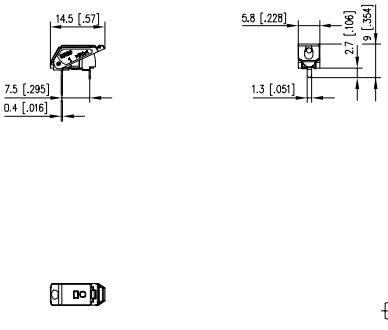

P/N	Color	Feature 1	Feature 2	EAN
SR99S01VBNN00G7	black			4250184193692
SR99S01VBNN01G7	white			4250184193739
SR99S01VBNN02G7	yellow			4250184193746
SR99S01VBNN03G7	green			4250184193708
SR99S01VBNN04G7	red			4250184193753
SR99S01VBNN05G7	blue			4250184193760

SM01W

- spring clamp terminal block, SMT solderable
- direction of connection vertical 0°
- Tape & Reel packaging
- Variants: 7" Reel, 13" Reel, 15" Reel, each variant for mounting soldering side or mounting component side

Technical data

	0.1 - 0.75 mm² AWG 26 - 18 / 13 A		
Overvoltage category	III	III	II
Pollution degree	3	2	2
Rated voltage	630 V	1600 V	1600 V
Rated test voltage	6 kV	8 kV	6 kV
Rated wiring solid wire	0.1 - 0.75 mm²		
Rated wiring solid wire	AWG 26 - 18		
Protection category according to IEC 60529	IP 00		
Min. insul. strip length	4 mm		

Dimensional drawing

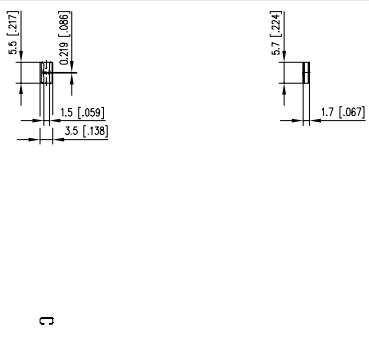

P/N	Color	Feature 1	Feature 2	EAN
ASM01W0164-0G16		15 " Reel	Mounting soldering side	4250184183945
ASM01W0164-1G16		15 " Reel	Mounting component side	4250184183952
ASM01W0164-2G16		7 " Reel	Mounting soldering side	4250184183969
ASM01W0164-3G16		7 " Reel	Mounting component side	4250184183976
ASM01W0164-4G16		13 " Reel	Mounting soldering side	4250184183983
ASM01W0164-5G16		13 " Reel	Mounting component side	4250184183990

SM01Y

- spring clamp terminal block, SMT solderable
- direction of connection vertical 0°
- Tape & Reel packaging
- Variants: 7" Reel, 13" Reel, 15" Reel, each variant for mounting soldering side or mounting component side

Technical data

	0.75 - 1.5 mm² AWG 18 - 16 / 13 A		
Overvoltage category	III	III	II
Pollution degree	3	2	2
Rated voltage	630 V	1600 V	1600 V
Rated test voltage	6 kV	8 kV	6 kV
Rated wiring solid wire	0.75 - 1.5 mm²		
Rated wiring solid wire	AWG 18 - 16		
Protection category according to IEC 60529	IP 00		
Min. insul. strip length	4 mm		

Dimensional drawing

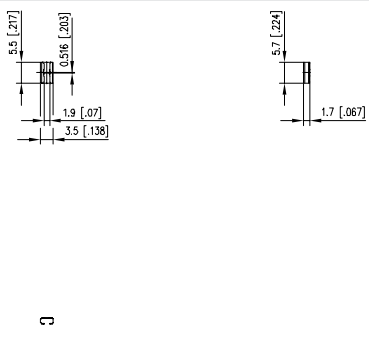

P/N	Color	Feature 1	Feature 2	EAN
ASM01Y0164-0G16		15 " Reel	Mounting soldering side	4250184184027
ASM01Y0164-1G16		15 " Reel	Mounting component side	4250184184034
ASM01Y0164-2G16		7 " Reel	Mounting soldering side	4250184184041
ASM01Y0164-3G16		7 " Reel	Mounting component side	4250184184058
ASM01Y0164-4G16		13 " Reel	Mounting soldering side	4250184184065
ASM01Y0164-5G16		13 " Reel	Mounting component side	4250184184072

Screw-type terminal blocks

Design specification

Terminal body
The terminal bodies consist of a copper wrought alloy. The surface is galvanically nickel-plated. With the types with soldering pin, the surface is given a galvanic nickel base and tin-plated to generate high corrosion resistance and superb soldering ability. All terminal bodies are installed in the insu-sulation housing to ensure that they cannot be lost.

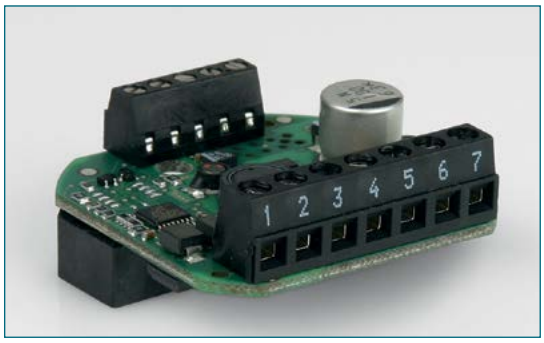

Terminal screws
The terminal screws in M2 – M4 can optionally be produced in different materials. The screws are rounded at the pressure areas, meaning that it is possible to connect the conductor without wire protection. Usually the screws are secured against unwanted loosening themselves.

Contact systems for the METZ CONNECT plug system
a) Lamella contacts
The lamella contacts are silver plated, optionally tinplated or gold-plated and are suitable for rounded pins. The lamella-like design of the contact bars means that currents of up to 10 A can be trans-ferred. Even after the 100th plugging, the transfer resistance between the jack contact and the pin header is ≤ 5 mΩ.

b) Plug system with integrated contact
The tulip-shaped plug system is made of bronze and is suited for both round and square pins.

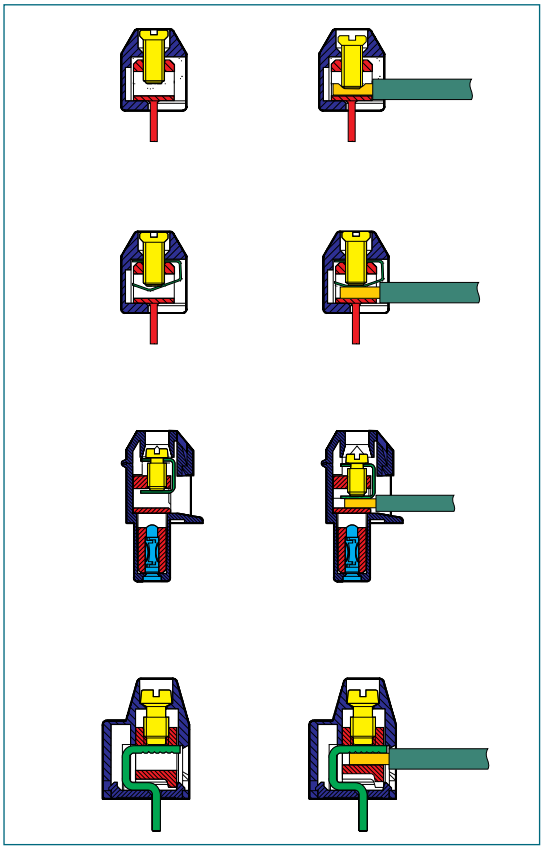

Wire protector
The wire protector prevents damage to the conductors during terminal connection.

Rising wire protector
Some types are equipped with a rising wire protector that works according to the principle of the lift system. When the screw is turned, the wire protector lifts parallel to the base of the terminal body.

Lift system
Through the lift effect of the terminal body, the conductor is clamped over a large area and in parallel. A damage to the conductor by the screw is entirely eliminated here too.

U | Contact

Screw-type terminal blocks

Printing options

We offer individual printing of your terminal blocks. Figures or symbols, left- or right flush, legible or standing on their head depending on the technical feasibility. Ink-jet print, pad printing and hot stamping are available as methods. Design your individual terminal block with us.

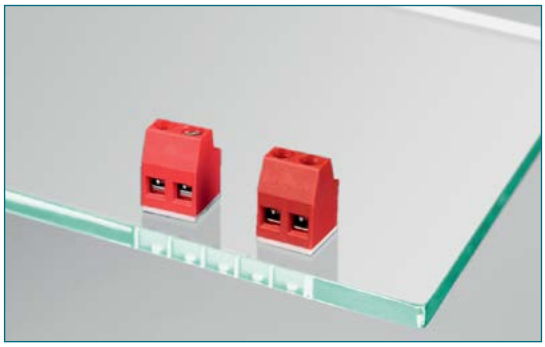

Color options

You can order the terminal blocks in a variety of basic colors. This is for instance helpful in housing integration to achieve an optically attractive overall picture or to use this as a further coding option. We would be pleased to advise you on the possible colors.

Torques – Extract from DIN EN 60947-1 and DIN EN 60999-1

Start-up torque for documenting the mechanical rigidity of screw connections.

Thread diameter (mm)		Tightening torque (Nm)	
Metric standard value	Diameter range	Test moment	Recommended
2.5	≤ 2.8	0.4	0.4–0.6
3.0	> 2.8 up to 3.0	0.5	0.5–0.7
–	> 3.0 up to 3.2	0.6	0.6–0.8
3.5	> 3.2 up to 3.6	0.8	0.8–1.0
4	> 3.6 up to 4.1	1.2	1.2–1.6

Product key screw-type terminal blocks

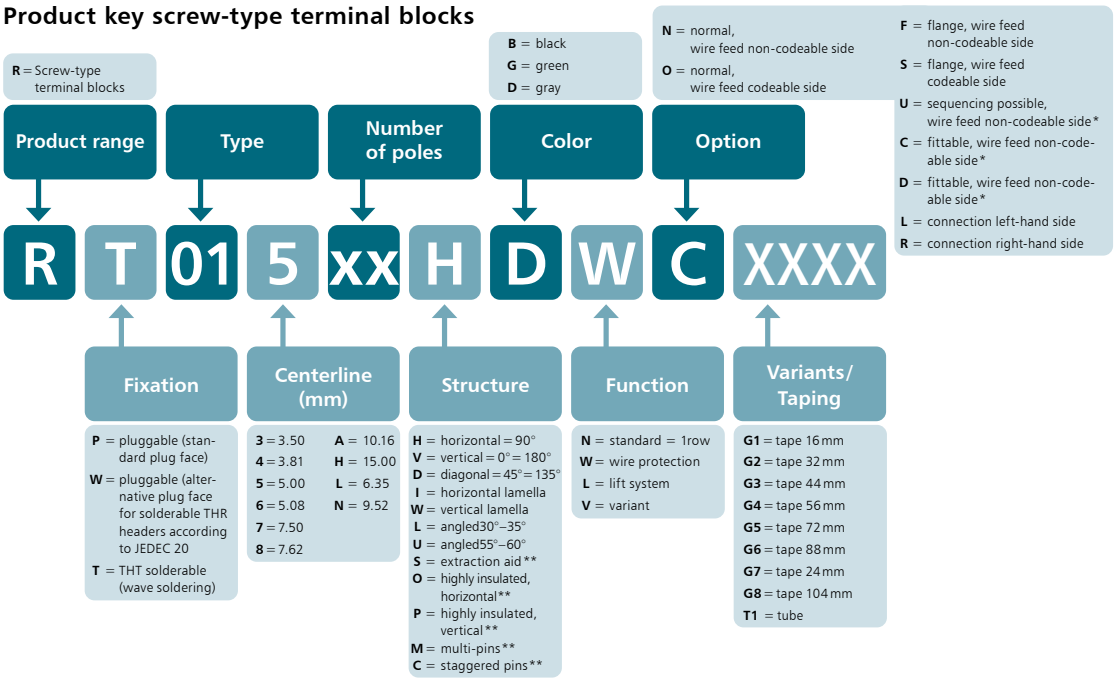

* Sequencing possible means the mechanical sequencing without loss of poles (by dovetails). Fittable stands for a loose sequencing without loss of poles (without dovetails).
** Only applicable if two variants are available.

Symbol Definition

Guiding icons

- Spring clamp terminal block
- IDC terminal block
- Screw type terminal block
- Pin header
- Female connector
- Ethernet M12
- solderable
- pluggable
- Centerline
- Wire entry 90°
- Diagonal wire entry
- Wire entry 0°
- Lift system
- Wire protector
- modular
- Pin header for vertical mounting
- Shrouded pin header for vertical mounting
- Pin header with open ends for vertical mounting
- Pin header with closed ends for vertical mounting
- Pin header for horizontal mounting
- Shrouded pin header for horizontal mounting
- Pin header with open ends for horizontal mounting
- Pin header with closed ends for horizontal mounting
- designed for THR
- designed for SMT
- Tape & Reel possible

Product family | Pole size | Color | Option

RT063xxHBNC *(Type 060)

Centerline | Design | Function | *old product name

- screw type terminal block, solderable
- centerline 3.50 mm, direction of connection 90°
- fittable without loss of poles
- color black

Technical data

cULus V / A / AWG 125 / 15 / 20 - 14

SEV 1 mm² 125 V / 13.5 A / T60

Overvoltage category	III	III	II
Pollution degree	3	2	2
Rated voltage	160 V	400 V	400 V
Rated test voltage	2.5 kV	2.5 kV	2.5 kV
Insulating material class	CTI 600		
Rated wiring solid wire	0.08 - 2.0 mm²		
Rated wiring stranded wire	0.08 - 2.0 mm²		
Rated wiring solid wire	AWG 28 - 14		
Rated wiring stranded wire	AWG 28 - 14		
Clearance and creepage distances	2.1 mm		
Solder pin dimension	0.9 mm		
Recommended pc board hole dia.	ø 1.2 mm		
Solder pin length	3.4 mm		
Protection category according to IEC 60529	IP 00		
Min. insul. strip length	5 mm		
Color	black		

Dimensional drawing

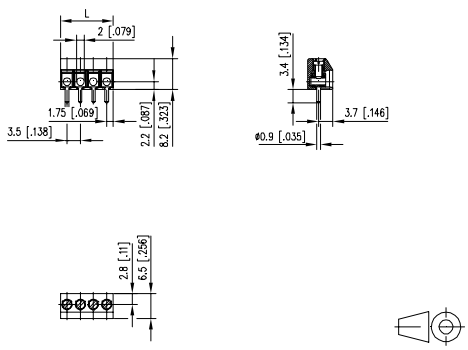

L = (Pole size - 1) * centerline + 3.5 mm (0.138 in.)

P/N
310601 ☐

Complete the part number by adding the pole size.

	02	03	04	05	06	07	08
09	10	11	12	13	14	15	16

(Information: page 67)

Standard pole sizes

Product family | Pole size | Color | Option

RT063xxHBWC *(Type 059)

Centerline | Design | Function | *old product name

- screw type terminal block, solderable
- centerline 3.50 mm, direction of connection 90°
- wire protector, fittable without loss of poles
- color black

Technical data

cULus V / A / AWG 150 / 10 / 28 - 16

SEV 1 mm² 125 V / 13.5 A / T60

Overvoltage category	III	III	II
Pollution degree	3	2	2
Rated voltage	160 V	400 V	400 V
Rated test voltage	2.5 kV	2.5 kV	2.5 kV
Insulating material class	CTI 600		
Rated wiring solid wire	0.33 - 1.5 mm²		
Rated wiring stranded wire	0.33 - 0.75 mm²		
Rated wiring solid wire	AWG 22 - 16		
Rated wiring stranded wire	AWG 22 - 18		
Clearance and creepage distances	2.1 mm		
Solder pin dimension	0.9 mm		
Recommended pc board hole dia.	ø 1.2 mm		
Solder pin length	3.4 mm		
Protection category according to IEC 60529	IP 20		
Min. insul. strip length	5 mm		
Color	black		

Dimensional drawing

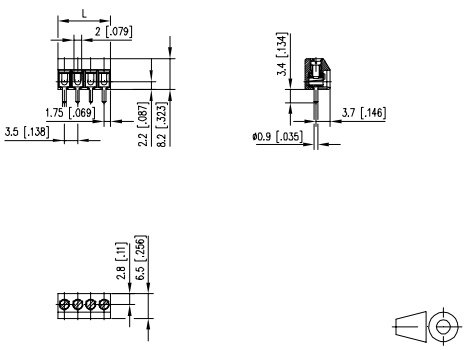

L = (Pole size - 1) * centerline + 3.5 mm (0.138 in.)

P/N
310591 ☐

Complete the part number by adding the pole size.

	02	03	04	05	06	07	08
09	10	11	12	13	14	15	16

(Information: page 67)

Standard pole sizes

Product family | Pole size | Color | Option

RT063xxOBWC *(Type 459)

Centerline | Design | Function | *old product name

- screw type terminal block, solderable
- centerline 3.50 mm, direction of connection 90°
- wire protector, fittable without loss of poles
- color black
- insulating proof

Technical data

cULus V / A / AWG 300 / 7 / 28 - 16

SEV 1.5 mm² 125 V / 13.5 A / T60

Overvoltage category	III	III	II
Pollution degree	3	2	2
Rated voltage	200 V	500 V	500 V
Rated test voltage	2.5 kV	2.5 kV	2.5 kV
Insulating material class	CTI 600		
Rated wiring solid wire	0.33 - 1.5 mm²		
Rated wiring stranded wire	0.33 - 0.75 mm²		
Rated wiring solid wire	AWG 22 - 16		
Rated wiring stranded wire	AWG 22 - 18		
Clearance and creepage distances	2.6 mm		
Solder pin dimension	0.9 mm		
Recommended pc board hole dia.	ø 1.2 mm		
Solder pin length	3.4 mm		
Protection category according to IEC 60529	IP 00		
Min. insul. strip length	5 mm		
Color	black		

Dimensional drawing

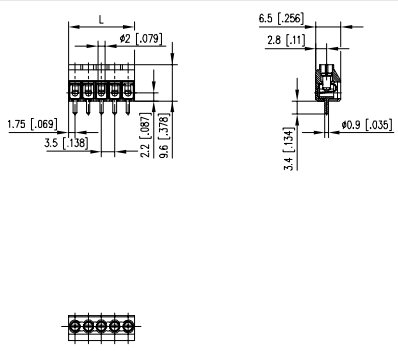

L = (Pole size - 1) * centerline + 3.5 mm (0.138 in.)

P/N

314591 ☐

Complete the part number by adding the pole size.

	02	03	04	05	06	07	08
09	10	11	12	13	14	15	16

(Information: page 67)

Standard pole sizes

* Approval pending

Product family | Pole size | Color | Option

RT063xxPBWC *(Type 461)

Centerline | Design | Function | *old product name

- screw type terminal block, solderable
- centerline 3.50 mm, direction of connection vertical 0°
- wire protector, fittable without loss of poles
- color black
- insulating proof

Technical data

cULus* V / A / AWG 130 / 10 / 20 - 16

SEV 1.5 mm² 125 V / 13.5 A / T60

Overvoltage category	III	III	II
Pollution degree	3	2	2
Rated voltage	200 V	500 V	500 V
Rated test voltage	2.5 kV	2.5 kV	2.5 kV
Insulating material class	CTI 600		
Rated wiring solid wire	0.33 - 1.5 mm²		
Rated wiring stranded wire	0.5 - 2.0 mm²		
Rated wiring solid wire	AWG 22 - 16		
Rated wiring stranded wire	AWG 20 - 14		
Clearance and creepage distances	2.65 mm		
Solder pin dimension	0.9 mm		
Recommended pc board hole dia.	ø 1.2 mm		
Solder pin length	3.4 mm		
Protection category according to IEC 60529	IP 00		
Min. insul. strip length	5 mm		
Color	black		

Dimensional drawing

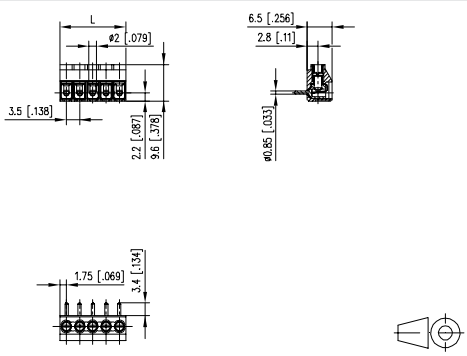

L = (Pole size - 1) * centerline + 3.5 mm (0.138 in.)

P/N

314611 ☐

Complete the part number by adding the pole size.

	02	03	04	05	06	07	08
09	10	11	12	13	14	15	16

(Information: page 67)

Standard pole sizes

Product family	Pole size	Color	Option
RT033	xx	H	B L U

Centerline | Design | Function

*(Type 359) *old product name

- screw type terminal block, solderable
- centerline 3.50 mm, direction of connection 90°
- lift system, modular
- color black
- Tape & Reel packaging
- Max. recommended number of poles: 16

Technical data

V / A / AWG 150 / 10 / 28 - 16

1.0 mm² 130 V / 12 A / T60

Overvoltage category	III	III	II
Pollution degree	3	2	2
Rated voltage	80 V	320 V	320 V
Rated test voltage	2.5 kV	2.5 kV	2.5 kV
Insulating material class	CTI 600		
Rated wiring solid wire	0.2 - 1.5 mm²		
Rated wiring stranded wire	0.2 - 1.5 mm²		
Rated wiring solid wire	AWG 26 - 16		
Rated wiring stranded wire	AWG 26 - 16		
Clearance and creepage distances	1.7 mm		
Solder pin dimension	0.5 x 0.9 mm		
Recommended pc board hole dia.	ø 1.1 mm		
Solder pin length	3.5 mm		
Protection category according to IEC 60529	IP 00		
Min. insul. strip length	5 mm		
Color	black		

Dimensional drawing

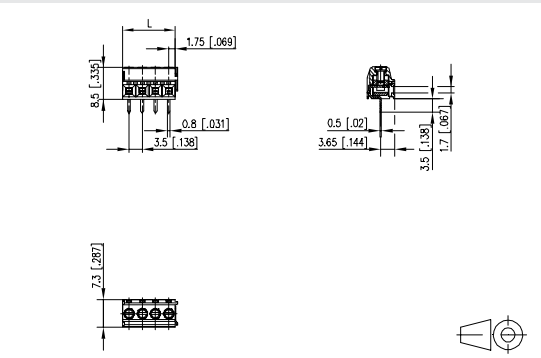

L = (Pole size - 1) * centerline + 3.5 mm (0.138 in.)

P/N

313591 ☐

Complete the part number by adding the pole size.

	02	03	04				

(Information: page 67)

Standard pole sizes

Product family	Pole size	Color	Option
RT083	xx	D B	W C

Centerline | Design | Function

*(Type 105) *old product name

- screw type terminal block, solderable
- centerline 3.50 mm, direction of connection 45°
- wire protector, fittable without loss of poles
- color black

Technical data

V / A / AWG 300 / 10 / 28 - 16

1.0 mm² 130 V / 13.5 A / T60

Overvoltage category	III	III	II
Pollution degree	3	2	2
Rated voltage	160 V	400 V	400 V
Rated test voltage	2.5 kV	2.5 kV	2.5 kV
Insulating material class	CTI 600		
Rated wiring solid wire	0.34 - 1.0 mm²		
Rated wiring stranded wire	0.34 - 1.0 mm²		
Rated wiring solid wire	AWG 22 - 18		
Rated wiring stranded wire	AWG 22 - 18		
Clearance and creepage distances	2.1 mm		
Solder pin dimension	0.9 mm		
Recommended pc board hole dia.	ø 1.2 mm		
Solder pin length	3.7 mm		
Protection category according to IEC 60529	IP 20		
Min. insul. strip length	5 mm		
Color	black		

Dimensional drawing

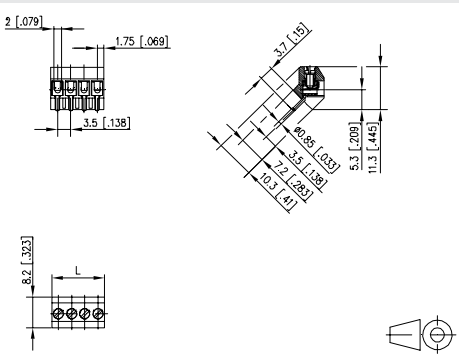

L = (Pole size - 1) * centerline + 3.5 mm (0.138 in.)

P/N

311051 ☐

Complete the part number by adding the pole size.

	02	03	04	05	06	07	08
09	10	11	12	13	14	15	16

(Information: page 67)

Standard pole sizes

Product family | Pole size | Color | Option

RT043xxLBLC *(Type 305)

Centerline | Design | Function | *old product name

- screw type terminal block, solderable
- centerline 3.50 mm, direction of connection 35°
- lift system, fittable without loss of poles
- color black

Technical data

cULus V / A / AWG 300 / 10 / 28 - 16

SEV 1.0 mm² 130 V / 13.5 A / T60

Overvoltage category	III	III	II
Pollution degree	3	2	2
Rated voltage	200 V	500 V	500 V
Rated test voltage	2.5 kV	2.5 kV	2.5 kV
Insulating material class	CTI 600		
Rated wiring solid wire	0.34 - 1.5 mm²		
Rated wiring stranded wire	0.34 - 1.5 mm²		
Rated wiring solid wire	AWG 22 - 16		
Rated wiring stranded wire	AWG 22 - 16		
Clearance and creepage distances	2.6 mm		
Solder pin dimension	0.5 x 0.9 mm		
Recommended pc board hole dia.	ø 1.1 mm		
Solder pin length	3.5 mm		
Protection category according to IEC 60529	IP 20		
Min. insul. strip length	5 mm		
Color	black		

Dimensional drawing

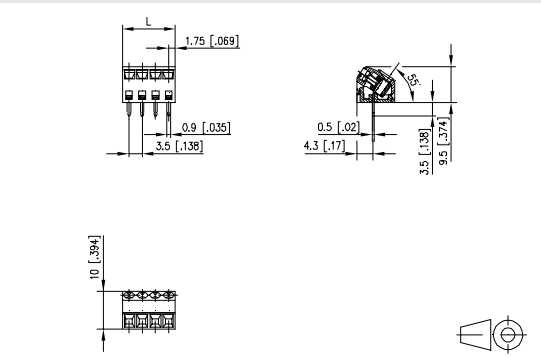

L = (Pole size - 1) * centerline + 3.5 mm (0.138 in.)

P/N

313051 ☐

Complete the part number by adding the pole size.

	02	03	04	05	06	07	08
09	10	11	12	13	14	15	16
17	18	19	20	21	22	23	24

(Information: page 67)

Standard pole sizes

Product family | Pole size | Color | Option

RT063xxVBWC *(Type 061)

Centerline | Design | Function | *old product name

- screw type terminal block, solderable
- centerline 3.50 mm, direction of connection vertical 0°
- wire protector, fittable without loss of poles
- color black

Technical data

cULus V / A / AWG 150 / 10 / 28 - 16

SEV 1.0 mm² 125 V / 13.5 A / T60

Overvoltage category	III	III	II
Pollution degree	3	2	2
Rated voltage	160 V	400 V	400 V
Rated test voltage	2.5 kV	2.5 kV	2.5 kV
Insulating material class	CTI 600		
Rated wiring solid wire	0.33 - 1.5 mm²		
Rated wiring stranded wire	0.5 - 2.0 mm²		
Rated wiring solid wire	AWG 22 - 16		
Rated wiring stranded wire	AWG 20 - 14		
Clearance and creepage distances	2.1 mm		
Solder pin dimension	0.9 mm		
Recommended pc board hole dia.	ø 1.2 mm		
Solder pin length	3.4 mm		
Protection category according to IEC 60529	IP 00		
Min. insul. strip length	5 mm		
Color	black		

Dimensional drawing

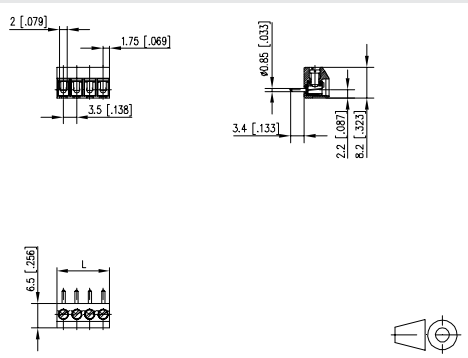

L = (Pole size - 1) * centerline + 3.5 mm (0.138 in.)

P/N

310611 ☐

Complete the part number by adding the pole size.

	02	03	04	05	06	07	08
09	10	11	12	13	14	15	16

(Information: page 67)

Standard pole sizes

Product family		Pole size		Color	Option	
RT03	3	xx	V	B	L	U

*(Type 361)

Centerline Design Function

*old product name

- screw type terminal block, solderable
- centerline 3.50 mm, direction of connection vertical 0°
- lift system, modular
- color black
- Max. recommended number of poles: 16

Technical data

c UL us V / A / AWG 150 / 10 / 28 - 16

SEV 1.0 mm² 130 V / 12 A / T60

Overvoltage category	III	III	II
Pollution degree	3	2	2
Rated voltage	80 V	320 V	320 V
Rated test voltage	2.5 kV	2.5 kV	2.5 kV
Insulating material class	CTI 600		
Rated wiring solid wire	0.2 - 1.5 mm²		
Rated wiring stranded wire	0.2 - 1.5 mm²		
Rated wiring solid wire	AWG 26 - 16		
Rated wiring stranded wire	AWG 26 - 16		
Clearance and creepage distances	1.7 mm		
Solder pin dimension	0.5 x 0.9 mm		
Recommended pc board hole dia.	ø 1.1 mm		
Solder pin length	3.3 mm		
Protection category according to IEC 60529	IP 20		
Min. insul. strip length	5 mm		
Color	black		

Dimensional drawing

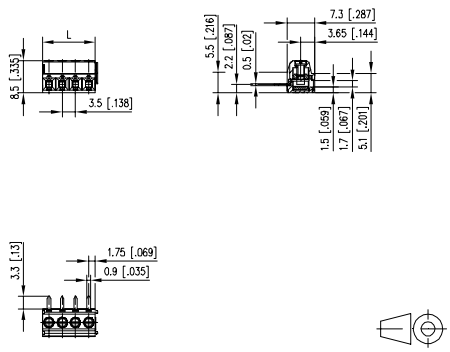

L = (Pole size - 1) * centerline + 3.5 mm (0.138 in.)

P/N

313611 ☐

Complete the part number by adding the pole size.

	02	03	04				

(Information: page 67)

■ Standard pole sizes

Product family	Pole size	Color	Option
RT03	4xx	H	B L C
Centerline		Design	Function

***(Type 086)**

*old product name

- screw type terminal block, solderable
- centerline 3.81 mm, direction of connection 90°
- lift system, fittable without loss of poles
- color black

Technical data

cULus V / A / AWG	150 / 10 / 28 - 18		
SEV 1.0 mm²	130 V / 13.5 A / T60		
Overvoltage category	III	III	II
Pollution degree	3	2	2
Rated voltage	160 V	400 V	400 V
Rated test voltage	2.5 kV	2.5 kV	2.5 kV
Insulating material class	CTI 600		
Rated wiring solid wire	0.2 - 1.5 mm²		
Rated wiring stranded wire	0.2 - 1 mm²		
Rated wiring solid wire	AWG 28 - 16		
Rated wiring stranded wire	AWG 28 - 18		
Clearance and creepage distances	2 mm		
Solder pin dimension	0.5 x 0.9 mm		
Recommended pc board hole dia.	ø 1.1 mm		
Solder pin length	3.5 mm		
Protection category according to IEC 60529	IP 00		
Min. insul. strip length	5 mm		
Color	black		

Dimensional drawing

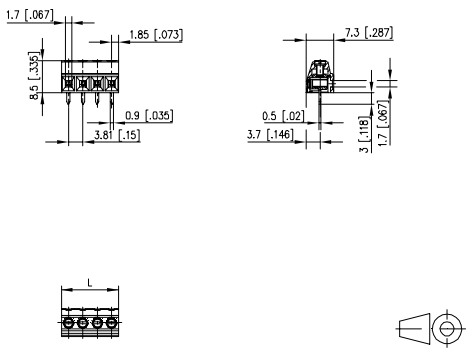

L = (Pole size - 1) * centerline + 3.7 mm (0.146 in.)

P/N

310861 ☐

Complete the part number by adding the pole size.

	02	03	04	05	06	07	08
09	10	11	12	13	14	15	16
17	18	19	20	21	22	23	24

(Information: page 67)

■ **Standard pole sizes**

Product family	Pole size	Color	Option	
RT01	5xx	H	DW	C *(Type 001)
Centerline		Design	Function	*old product name

- screw type terminal block, solderable
- centerline 5.00 mm, direction of connection 90°
- wire protector, fittable without loss of poles
- color gray

Technical data

cULus V / A / AWG 300 / 15 / 22 - 14

SEV 1.5 mm² 130 V / 17.5 A / T60

Overvoltage category	III	III	II
Pollution degree	3	2	2
Rated voltage	200 V	500 V	500 V
Rated test voltage	2.5 kV	2.5 kV	2.5 kV
Insulating material class	CTI 600		
Rated wiring solid wire	0.34 - 2 mm²		
Rated wiring stranded wire	0.34 - 2 mm²		
Rated wiring solid wire	AWG 22 - 14		
Rated wiring stranded wire	AWG 22 - 14		
Clearance and creepage distances	2.6 mm		
Solder pin dimension	0.9 mm		
Recommended pc board hole dia.	ø 1.3 mm		
Solder pin length	3.8 mm		
Protection category according to IEC 60529	IP 10		
Min. insul. strip length	6 mm		
Color	gray		

Dimensional drawing

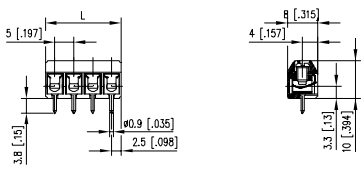

L = (Pole size - 1) * centerline + 5 mm (0.197 in.)

P/N
310011 ☐

Complete the part number by adding the pole size.

	02	03	04	05	06	07	08
09	10	11	12	13	14	15	16
17	18	19	20	21	22		

(Information: page 67)

Standard pole sizes

Product family	Pole size	Color	Option	
RT01	5xx	H	DW	U *(Type 055)
Centerline		Design	Function	*old product name

- screw type terminal block, solderable
- centerline 5.00 mm, direction of connection 90°
- wire protector, modular
- color gray

Technical data

cULus V / A / AWG 300 / 15 / 22 - 14

SEV 1.5 mm² 130 V / 13 A / T60

Overvoltage category	III	III	II
Pollution degree	3	2	2
Rated voltage	200 V	500 V	500 V
Rated test voltage	2.5 kV	2.5 kV	2.5 kV
Insulating material class	CTI 600		
Rated wiring solid wire	0.34 - 2.0 mm²		
Rated wiring stranded wire	0.34 - 2.0 mm²		
Rated wiring solid wire	AWG 22 - 14		
Rated wiring stranded wire	AWG 22 - 14		
Clearance and creepage distances	2.6 mm		
Solder pin dimension	0.9 mm		
Recommended pc board hole dia.	ø 1.3 mm		
Solder pin length	3.8 mm		
Protection category according to IEC 60529	IP 10		
Min. insul. strip length	6 mm		
Color	gray		

Dimensional drawing

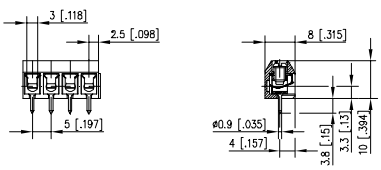

L = (Pole size - 1) * centerline + 5 mm (0.197 in.)

P/N
310551 ☐

Complete the part number by adding the pole size.

	02	03	04				

(Information: page 67)

Standard pole sizes

Product family	Pole size	Color	Option	
RT135	xx	H	BWC	*(Type 271)
Centerline	Design	Function		*old product name

- screw type terminal block, solderable
- centerline 5.00 mm, direction of connection 90°
- wire protector, fittable without loss of poles
- color black

Technical data

cULus V / A / AWG 300 / 15 / 26 - 14

SEV 2.5 mm² 250 V / 24 A / T60

Overvoltage category	III	III	II
Pollution degree	3	2	2
Rated voltage	250 V	630 V	630 V
Rated test voltage	4.0 kV	4.0 kV	4 kV
Insulating material class	CTI 600		
Rated wiring solid wire	0.08 - 4 mm²		
Rated wiring stranded wire	0.08 - 2.5 mm²		
Rated wiring solid wire	AWG 26 - 14		
Rated wiring stranded wire	AWG 26 - 14		
Clearance and creepage distances	3.3 mm		
Solder pin dimension	1.0 mm		
Recommended pc board hole dia.	ø 1.3 mm		
Solder pin length	4 mm		
Protection category according to IEC 60529	IP 20		
Min. insul. strip length	8 mm		
Color	black		

Dimensional drawing

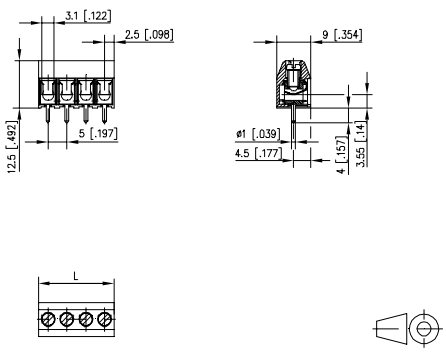

L = (Pole size - 1) * centerline + 5 mm (0.197 in.)

P/N

312711 ☐

Complete the part number by adding the pole size.

	02	03	04	05	06	07	08
09	10	11	12	13	14	15	16
17	18	19	20	21	22	23	24

(Information: page 67)

Standard pole sizes

Product family	Pole size	Color	Option	
RT045	xx	H	BWC	*(Type 003)
Centerline	Design	Function		*old product name

- screw type terminal block, solderable
- centerline 5.00 mm, direction of connection 90°
- wire protector, fittable without loss of poles
- color black

Technical data

cULus V / A / AWG 300 / 20 / 22 - 12

SEV 2.5 mm² 250 V / 24 A / T60

Overvoltage category	III	III	II
Pollution degree	3	2	2
Rated voltage	250 V	630 V	630 V
Rated test voltage	4.0 kV	4.0 kV	4 kV
Insulating material class	CTI 600		
Rated wiring solid wire	0.34 - 2.5 mm²		
Rated wiring stranded wire	0.34 - 2.5 mm²		
Rated wiring solid wire	AWG 22 - 12		
Rated wiring stranded wire	AWG 22 - 12		
Clearance and creepage distances	3.9 mm		
Solder pin dimension	1.0 mm		
Recommended pc board hole dia.	ø 1.3 mm		
Solder pin length	4 mm		
Protection category according to IEC 60529	IP 20		
Min. insul. strip length	8 mm		
Color	black		

Dimensional drawing

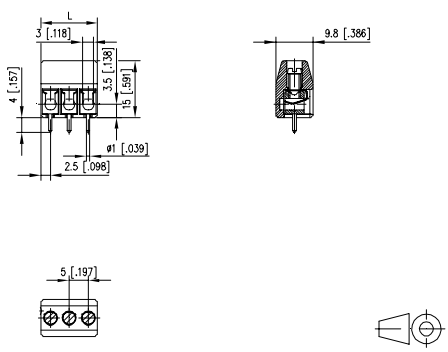

L = (Pole size - 1) * centerline + 5 mm (0.197 in.)

P/N

310031 ☐

Complete the part number by adding the pole size.

	02	03	04	05	06	07	08
09	10	11	12	13	14	15	16
17	18	19	20	21	22	23	24

(Information: page 67)

Standard pole sizes

Product family	Pole size	Color	Option
RT045	xx	M	BWC

Centerline | Design | Function

*(Type 069) *old product name

- screw type terminal block, solderable, double solder pins
- centerline 5.00 mm, direction of connection 90°
- wire protector, fittable without loss of poles
- color black

Technical data

cULus V / A / AWG 300 / 20 / 22 - 12

SEV 2.5 mm² 250 V / 24 A / T60

Overvoltage category	III	III	II
Pollution degree	3	2	2
Rated voltage	250 V	630 V	630 V
Rated test voltage	4.0 kV	4.0 kV	4 kV
Insulating material class	CTI 600		
Rated wiring solid wire	0.34 - 2.5 mm²		
Rated wiring stranded wire	0.34 - 2.5 mm²		
Rated wiring solid wire	AWG 22 - 12		
Rated wiring stranded wire	AWG 22 - 12		
Clearance and creepage distances	3.9 mm		
Solder pin dimension	2 x 0.9 x 0.9 mm		
Recommended pc board hole dia.	ø 1.4 mm		
Solder pin length	3.5 mm		
Protection category according to IEC 60529	IP 20		
Min. insul. strip length	8 mm		
Color	black		

Dimensional drawing

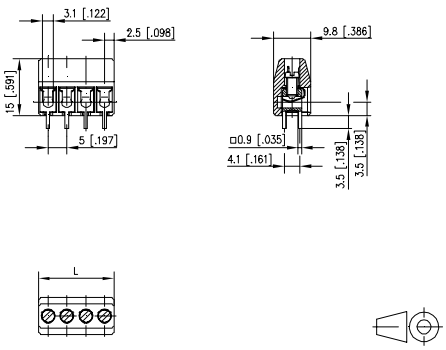

L = (Pole size - 1) * centerline + 5 mm (0.197 in.)

P/N

310691 □

Complete the part number by adding the pole size.

	02	03	04	05	06	07	08
09	10	11	12	13	14	15	16
17	18	19	20	21	22	23	24

(Information: page 67)

Standard pole sizes

Product family	Pole size	Color	Option
RT055	xx	H	BLC

Centerline | Design | Function

*(Type 011) *old product name

- screw type terminal block, solderable
- centerline 5.00 mm, direction of connection 90°
- lift system, fittable without loss of poles
- color black

Technical data

cULus V / A / AWG 300 / 15 / 28 - 14

SEV 1.5 mm² 250 V / 17.5 A / T60

Overvoltage category	III	III	II
Pollution degree	3	2	2
Rated voltage	250 V	630 V	630 V
Rated test voltage	4.0 kV	4.0 kV	4 kV
Insulating material class	CTI 600		
Rated wiring solid wire	0.34 - 2.5 mm²		
Rated wiring stranded wire	0.34 - 2.5 mm²		
Rated wiring solid wire	AWG 28 - 12		
Rated wiring stranded wire	AWG 28 - 12		
Clearance and creepage distances	3.9 mm		
Solder pin dimension	0.8 x 1.0 mm		
Recommended pc board hole dia.	ø 1.4 mm		
Solder pin length	4.1 mm		
Protection category according to IEC 60529	IP 20		
Min. insul. strip length	7 mm		
Color	black		

Dimensional drawing

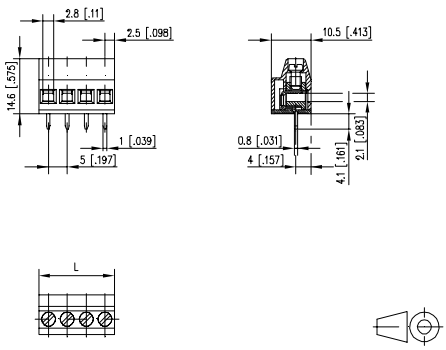

L = (Pole size - 1) * centerline + 5 mm (0.197 in.)

P/N

310111 □

Complete the part number by adding the pole size.

	02	03	04	05	06	07	08
09	10	11	12	13	14	15	16

(Information: page 67)

Standard pole sizes

Product family | Pole size | Color | Option

RT025xxHBLC *(Type 071)

Centerline | Design | Function | *old product name

- screw type terminal block, solderable
- centerline 5.00 mm, direction of connection 90°
- lift system, fittable without loss of poles
- color black

Technical data

cULus V / A / AWG 300 / 20 / 22 - 12

SEV 2.5 mm² 250 V / 24 A / T60

Overvoltage category	III	III	II
Pollution degree	3	2	2
Rated voltage	320 V	800 V	800 V
Rated test voltage	4 kV	4.0 kV	4 kV
Insulating material class	CTI 600		
Rated wiring solid wire	0.34 - 2.5 mm²		
Rated wiring stranded wire	0.34 - 2.5 mm²		
Rated wiring solid wire	AWG 22 - 12		
Rated wiring stranded wire	AWG 22 - 12		
Clearance and creepage distances	4 mm		
Solder pin dimension	0.8 x 1.0 mm		
Recommended pc board hole dia.	ø 1.4 mm		
Solder pin length	4.1 mm		
Protection category according to IEC 60529	IP 20		
Min. insul. strip length	8 mm		
Color	black		

Dimensional drawing

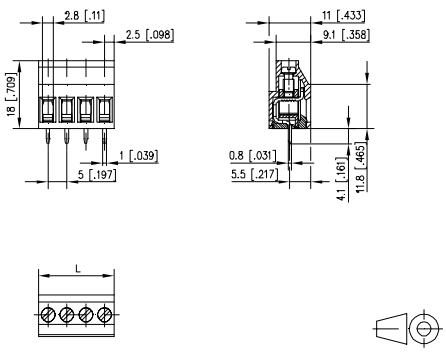

L = (Pole size - 1) * centerline + 5 mm (0.197 in.)

P/N

310711 ☐

Complete the part number by adding the pole size.

	02	03	04	05	06	07	08
09	10	11	12	13	14	15	16
17	18	19	20	21	22	23	24

(Information: page 67)

Standard pole sizes

Product family | Pole size | Color | Option

RT025xxHBLU *(Type 072)

Centerline | Design | Function | *old product name

- screw type terminal block, solderable
- centerline 5.00 mm, direction of connection 90°
- lift system, modular
- color black

Technical data

cULus V / A / AWG 300 / 20 / 22 - 12

SEV 2.5 mm² 250 V / 16 A / T60

Overvoltage category	III	III	II
Pollution degree	3	2	2
Rated voltage	320 V	800 V	800 V
Rated test voltage	4 kV	4.0 kV	4 kV
Insulating material class	CTI 600		
Rated wiring solid wire	0.34 - 2.5 mm²		
Rated wiring stranded wire	0.34 - 2.5 mm²		
Rated wiring solid wire	AWG 22 - 12		
Rated wiring stranded wire	AWG 22 - 12		
Clearance and creepage distances	4 mm		
Solder pin dimension	0.8 x 1.0 mm		
Recommended pc board hole dia.	ø 1.4 mm		
Solder pin length	4.1 mm		
Protection category according to IEC 60529	IP 20		
Min. insul. strip length	8 mm		
Color	black		

Dimensional drawing

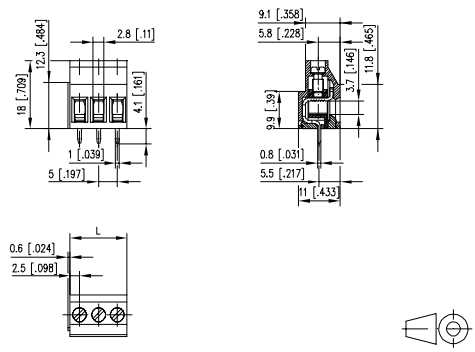

L = (Pole size - 1) * centerline + 5 mm (0.197 in.)

P/N

310721 ☐

Complete the part number by adding the pole size.

	02	03	04				

(Information: page 67)

Standard pole sizes

Product family	Pole size	Color	Option
RT145	xx	H	B V C
Centerline		Design	Function

RT145xxHBVC *(Type 204)

*old product name

- screw type terminal block, solderable
- centerline 5.00 mm, direction of connection 90°
- lift system, fittable without loss of poles
- color black

Technical data

V / A / AWG 300 / 15 / 28 - 12

2.5 mm² 250 V / 16 A / T60

Overvoltage category	III	III	II
Pollution degree	3	2	2
Rated voltage	320 V	800 V	800 V
Rated test voltage	4 kV	4.0 kV	4 kV
Insulating material class	CTI 600		
Rated wiring solid wire	0.08 - 2.5 mm²		
Rated wiring stranded wire	0.08 - 2.5 mm²		
Rated wiring solid wire	AWG 28 - 12		
Rated wiring stranded wire	AWG 28 - 12		
Clearance and creepage distances	4 mm		
Solder pin dimension	0.8 x 1.0 mm		
Recommended pc board hole dia.	ø 1.4 mm		
Solder pin length	3.6 mm		
Protection category according to IEC 60529	IP 20		
Min. insul. strip length	8 mm		
Color	black		

Dimensional drawing

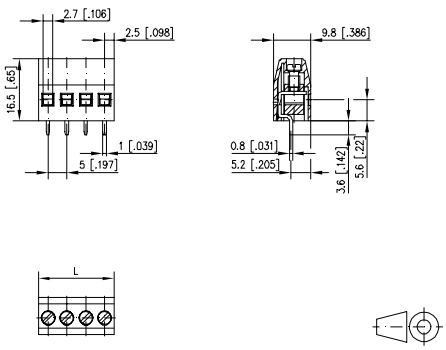

L = (Pole size - 1) * centerline + 5 mm (0.197 in.)

P/N

312041 ☐

Complete the part number by adding the pole size.

	02	03	04	05	06	07	08
09	10	11	12	13	14	15	16
17	18	19	20	21	22	23	24

(Information: page 67)

Standard pole sizes

Product family	Pole size	Color	Option
RT145	xx	M	B L C
Centerline		Design	Function

RT145xxMBLC *(Type 269)

*old product name

- screw type terminal block, solderable, double solder pins
- centerline 5.00 mm, direction of connection 90°
- lift system, fittable without loss of poles
- color black
- multiple pins

Technical data

V / A / AWG 300 / 15 / 28 - 12

2.5 mm² 250 V / 16 A / T60

Overvoltage category	III	III	II
Pollution degree	3	2	2
Rated voltage	320 V	800 V	800 V
Rated test voltage	4 kV	4.0 kV	4 kV
Insulating material class	CTI 600		
Rated wiring solid wire	0.08 - 2.5 mm²		
Rated wiring stranded wire	0.08 - 2.5 mm²		
Rated wiring solid wire	AWG 28 - 12		
Rated wiring stranded wire	AWG 28 - 12		
Clearance and creepage distances	4 mm		
Solder pin dimension	2 x 0.8 x 1.0 mm		
Recommended pc board hole dia.	ø 1.4 mm		
Solder pin length	3.2 mm		
Protection category according to IEC 60529	IP 20		
Min. insul. strip length	8 mm		
Color	black		

Dimensional drawing

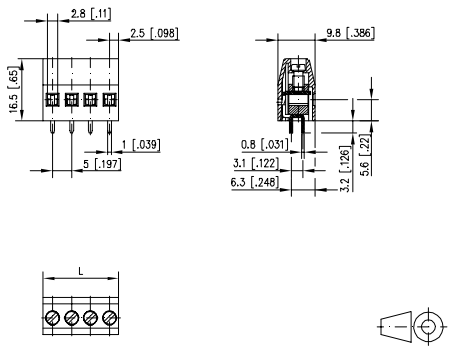

L = (Pole size - 1) * centerline + 5 mm (0.197 in.)

P/N

312691 ☐

Complete the part number by adding the pole size.

	02	03	04	05	06	07	08
09	10	11	12	13	14	15	16
17	18	19	20	21	22	23	24

(Information: page 67)

Standard pole sizes

Product family | Pole size | Color | Option

RT165xxHBNC *(Type 170)

Centerline | Design | Function | *old product name

- screw type terminal block, solderable, double solder pins
- centerline 5.00 mm, direction of connection 90°
- fittable without loss of poles
- color black
- big chamber for wire entry 2 x 2.50 mm² / 2 x 13.00 AWG

Technical data

cULus V / A / AWG 300 / 20 / 20 - 10

SEV 2x2.5 mm² 250 V / 24 A / T60

Overvoltage category	III	III	II
Pollution degree	3	2	2
Rated voltage	250 V	630 V	630 V
Rated test voltage	4.0 kV	4.0 kV	4 kV
Insulating material class	CTI 600		
Rated wiring solid wire	0.5 - 4 mm²		
Rated wiring stranded wire	0.5 - 4 mm²		
Rated wiring solid wire	AWG 20 - 10		
Rated wiring stranded wire	AWG 20 - 10		
Clearance and creepage distances	3.5 mm		
Solder pin dimension	2 x 1.5 x 1.5 mm		
Recommended pc board hole dia.	ø 2.4 mm		
Solder pin length	2.9 mm		
Protection category according to IEC 60529	IP 10		
Min. insul. strip length	9.5 mm		
Color	black		

Dimensional drawing

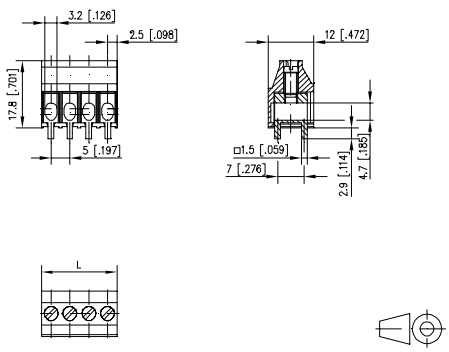

L = (Pole size - 1) * centerline + 5 mm (0.197 in.)

P/N

311701 □

Complete the part number by adding the pole size.

	02	03	04	05	06	07	08
09	10	11	12				

(Information: page 67)

Standard pole sizes

Product family | Pole size | Color | Option

RT035xxHBLU *(Type 094)

Centerline | Design | Function | *old product name

- screw type terminal block, solderable
- centerline 5.00 mm, direction of connection 90°
- lift system, modular
- color black

Technical data

cULus V / A / AWG 300 / 10 / 26 - 16

SEV 1.5 mm² 250 V / 17.5 A / T60

Overvoltage category	III	III	II
Pollution degree	3	2	2
Rated voltage	250 V	630 V	630 V
Rated test voltage	4.0 kV	4.0 kV	4 kV
Insulating material class	CTI 600		
Rated wiring solid wire	0.2 - 1.5 mm²		
Rated wiring stranded wire	0.2 - 1.5 mm²		
Rated wiring solid wire	AWG 26 - 16		
Rated wiring stranded wire	AWG 26 - 16		
Clearance and creepage distances	3.2 mm		
Solder pin dimension	0.5 x 1.0 mm		
Recommended pc board hole dia.	ø 1.3 mm		
Solder pin length	3.4 mm		
Protection category according to IEC 60529	IP 20		
Min. insul. strip length	6 mm		
Color	black		

Dimensional drawing

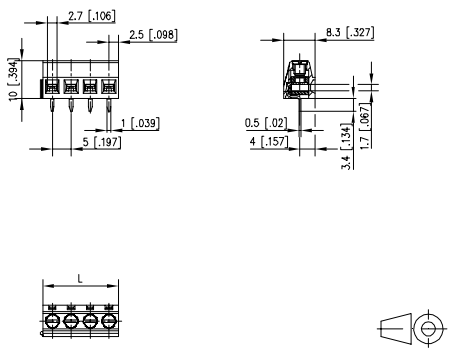

L = (Pole size - 1) * centerline + 5 mm (0.197 in.)

P/N

310941 □

Complete the part number by adding the pole size.

	02	03	04	05	06	07	08
09	10	11	12	13	14	15	16
17	18	19	20	21	22	23	24

(Information: page 67)

Standard pole sizes

Accessories

	Page
for **RT075xxHBLU**	
711401	294

Product family | Pole size | Color | Option

RT075xxHBLU *(Type 092)

Centerline | Design | Function | *old product name

- screw type terminal block, solderable, double solder pins
- centerline 5.00 mm, direction of connection 90°
- lift system, modular
- color black
- double stacked

Technical data

cULus V / A / AWG 300 / 10 / 26 - 16

SEV 1.5 mm² 250 V / 17.5 A / T60

Overvoltage category	III	III	II
Pollution degree	3	2	2
Rated voltage	250 V	630 V	630 V
Rated test voltage	4.0 kV	4.0 kV	4 kV
Insulating material class	CTI 600		
Rated wiring solid wire	0.34 - 1.5 mm²		
Rated wiring stranded wire	0.34 - 1.5 mm²		
Rated wiring solid wire	AWG 26 - 16		
Rated wiring stranded wire	AWG 26 - 16		
Clearance and creepage distances	3.2 mm		
Solder pin dimension	2 x 0.5 x 1.0 mm		
Recommended pc board hole dia.	ø 1.3 mm		
Solder pin length	3.4 mm		
Protection category according to IEC 60529	IP 20		
Min. insul. strip length	6 mm		
Color	black		

Dimensional drawing

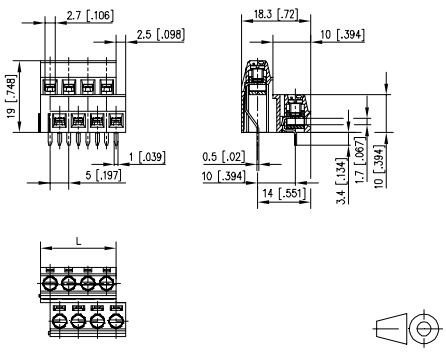

L = (Pole size - 1) * centerline + 5 mm (0.197 in.)

P/N

310921 ☐

Complete the part number by adding the pole size.

	04	06	08	10	12	14	16

(Information: page 67)

Standard pole sizes

Product family | Pole size | Color | Option

RT205xxHBLU *(Type 096)

Centerline | Design | Function | *old product name

- screw type terminal block, solderable, double solder pins
- centerline 5.00 mm, direction of connection 90°
- lift system, modular
- color black
- double stacked

Technical data

cULus V / A / AWG 300 / 20 / 22 - 12

SEV 2.5 mm² 250 V / 24 A / T60

Overvoltage category	III	III	II
Pollution degree	3	2	2
Rated voltage	320 V	800 V	800 V
Rated test voltage	4 kV	4.0 kV	4 kV
Insulating material class	CTI 600		
Rated wiring solid wire	0.34 - 2.5 mm²		
Rated wiring stranded wire	0.34 - 2.5 mm²		
Rated wiring solid wire	AWG 22 - 12		
Rated wiring stranded wire	AWG 22 - 12		
Clearance and creepage distances	4 mm		
Solder pin dimension	2 x 0.8 x 1.0 mm		
Recommended pc board hole dia.	ø 1.4 mm		
Solder pin length	5 mm		
Protection category according to IEC 60529	IP 20		
Min. insul. strip length	6 mm		
Color	black		

Dimensional drawing

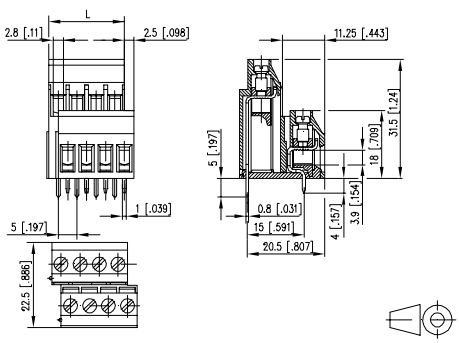

L = (Pole size - 1) * centerline + 5 mm (0.197 in.)

P/N

310961 ☐

Complete the part number by adding the pole size.

	04	06					

(Information: page 67)

Standard pole sizes

Product family | Pole size | Color | Option

RT025xxOGLU *(Type 065)

Centerline | Design | Function | *old product name

- screw type terminal block, solderable
- centerline 5.00 mm, direction of connection 90°
- lift system, modular
- color green
- distribution terminal block, all poles with same potential, insulating proof

Technical data

c UL us V / A / AWG 300 / 20 / 22 - 12

SEV 2.5 mm² 250 V / 24 A / T60

Overvoltage category	III	III	II
Pollution degree	3	2	2
Rated voltage	320 V	800 V	800 V
Rated test voltage	4 kV	4.0 kV	4 kV
Insulating material class	CTI 600		
Rated wiring solid wire	0.34 - 2.5 mm²		
Rated wiring stranded wire	0.34 - 2.5 mm²		
Rated wiring solid wire	AWG 22 - 12		
Rated wiring stranded wire	AWG 22 - 12		
Clearance and creepage distances	4 mm		
Solder pin dimension	0.8 x 1.0 mm		
Recommended pc board hole dia.	ø 1.4 mm		
Solder pin length	5.1 mm		
Protection category according to IEC 60529	IP 20		
Min. insul. strip length	8 mm		
Color	green		

Dimensional drawing

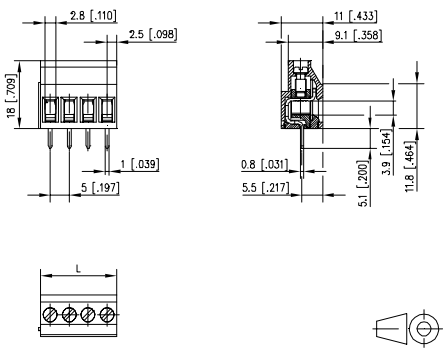

L = (Pole size - 1) * centerline + 5 mm (0.197 in.)

P/N

310651 ☐

Complete the part number by adding the pole size.

	02	03	04	05	06	07	08
09	10	11	12				

(Information: page 67)

Standard pole sizes

Product family | Pole size | Color | Option

RT025xxHDLL *(Type 385)

Centerline | Design | Function | *old product name

- screw type terminal block, solderable
- centerline 5.00 mm, direction of connection 90°
- lift system, fittable without loss of poles
- color gray
- solder pins right-angled to the left

Technical data

c UL us V / A / AWG 300 / 20 / 20 - 12

SEV 2.50 mm² 250 V / 24 A / T60

Overvoltage category	III	III	II
Pollution degree	3	2	2
Rated voltage	320 V	800 V	800 V
Rated test voltage	4 kV	4.0 kV	4 kV
Insulating material class	CTI 600		
Rated wiring solid wire	0.34 - 2.5 mm²		
Rated wiring stranded wire	0.34 - 2.5 mm²		
Rated wiring solid wire	AWG 20 - 12		
Rated wiring stranded wire	AWG 20 - 12		
Clearance and creepage distances	4 mm		
Solder pin dimension	see drawing mm		
Recommended pc board hole dia.	ø 1.4 mm		
Solder pin length	3.9 mm		
Protection category according to IEC 60529	IP 20		
Min. insul. strip length	8 mm		
Color	gray		

Dimensional drawing

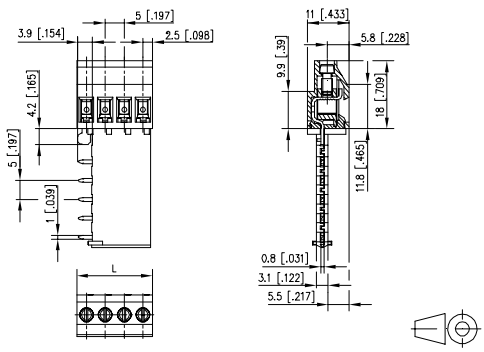

L = (Pole size - 1) * centerline + 5 mm (0.197 in.)

P/N

313851 ☐

Complete the part number by adding the pole size.

	02	03	04				

(Information: page 67)

Standard pole sizes

Product family	Pole size	Color	Option	
RT025	xx	H	DL	R *(Type 386)
Centerline		Design	Function	*old product name

- screw type terminal block, solderable
- centerline 5.00 mm, direction of connection 90°
- lift system, fittable without loss of poles
- color gray
- solder pins right-angled to the right

Technical data

V / A / AWG 300 / 20 / 20 - 12

2.5 mm² 250 V / 24 A / T60

Overvoltage category	III	III	II
Pollution degree	3	2	2
Rated voltage	320 V	800 V	800 V
Rated test voltage	4 kV	4.0 kV	4 kV
Insulating material class	CTI 600		
Rated wiring solid wire	0.34 - 4 mm²		
Rated wiring stranded wire	0.34 - 2.5 mm²		
Rated wiring solid wire	AWG 20 - 12		
Rated wiring stranded wire	AWG 20 - 12		
Clearance and creepage distances	4 mm		
Solder pin dimension	see drawing mm		
Recommended pc board hole dia.	ø 1.4 mm		
Solder pin length	3.9 mm		
Protection category according to IEC 60529	IP 20		
Min. insul. strip length	8 mm		
Color	gray		

Dimensional drawing

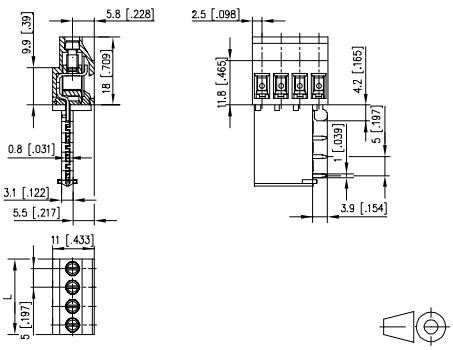

L = (Pole size - 1) * centerline + 5 mm (0.197 in.)

P/N
313861 ☐

Complete the part number by adding the pole size.

	02	03	04			

(Information: page 67)

Standard pole sizes

Product family	Pole size	Color	Option	
RT085	xx	D	BW	C *(Type 005)
Centerline		Design	Function	*old product name

- screw type terminal block, solderable
- centerline 5.00 mm, direction of connection 45°
- wire protector, fittable without loss of poles
- color black

Technical data

V / A / AWG 300 / 20 / 22 - 12

2.5 mm² 250 V / 24 A / T60

Overvoltage category	III	III	II
Pollution degree	3	2	2
Rated voltage	200 V	500 V	500 V
Rated test voltage	2.5 kV	2.5 kV	2.5 kV
Insulating material class	CTI 600		
Rated wiring solid wire	0.34 - 2.5 mm²		
Rated wiring stranded wire	0.34 - 2.5 mm²		
Rated wiring solid wire	AWG 22 - 12		
Rated wiring stranded wire	AWG 22 - 12		
Clearance and creepage distances	2.6 mm		
Solder pin dimension	1.0 mm		
Recommended pc board hole dia.	ø 1.3 mm		
Solder pin length	5 mm		
Protection category according to IEC 60529	IP 20		
Min. insul. strip length	8 mm		
Color	black		

Dimensional drawing

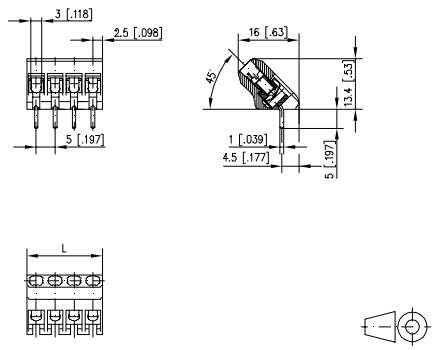

L = (Pole size - 1) * centerline + 5 mm (0.197 in.)

P/N
310051 ☐

Complete the part number by adding the pole size.

	02	03	04	05	06	07	08
09	10	11	12				

(Information: page 67)

Standard pole sizes

Product family | Pole size | Color | Option

RT045xxUBLC *(Type 205)

Centerline | Design | Function | *old product name

- screw type terminal block, solderable
- centerline 5.00 mm, direction of connection 55°
- lift system, fittable without loss of poles
- color black

Technical data

cULus V / A / AWG 300 / 15 / 28 - 12

SEV 2.5 mm² 250 V / 24 A / T60

Overvoltage category	III	III	II
Pollution degree	3	2	2
Rated voltage	250 V	630 V	630 V
Rated test voltage	4.0 kV	4.0 kV	4 kV
Insulating material class	CTI 600		
Rated wiring solid wire	0.34 - 2.5 mm²		
Rated wiring stranded wire	0.34 - 2.5 mm²		
Rated wiring solid wire	AWG 28 - 12		
Rated wiring stranded wire	AWG 28 - 12		
Clearance and creepage distances	3.2 mm		
Solder pin dimension	0.8 x 1.0 mm		
Recommended pc board hole dia.	ø 1.4 mm		
Solder pin length	3.4 mm		
Protection category according to IEC 60529	IP 20		
Min. insul. strip length	7 mm		
Color	black		

Dimensional drawing

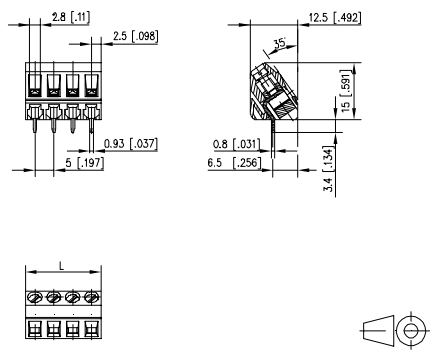

L = (Pole size - 1) * centerline + 5 mm (0.197 in.)

P/N

312051 ☐

Complete the part number by adding the pole size.

	02	03	04	05	06	07	08
09	10	11	12	13	14	15	16
17	18	19	20	21	22	23	24

(Information: page 67)

Standard pole sizes

Product family | Pole size | Color | Option

RT015xxVDWC *(Type 063)

Centerline | Design | Function | *old product name

- screw type terminal block, solderable
- centerline 5.00 mm, direction of connection vertical 0°
- wire protector, fittable without loss of poles
- color gray

Technical data

cULus V / A / AWG 300 / 15 / 22 - 14

SEV 1.5 mm² 130 V / 13 A / T60

Overvoltage category	III	III	II
Pollution degree	3	2	2
Rated voltage	200 V	500 V	500 V
Rated test voltage	2.5 kV	2.5 kV	2.5 kV
Insulating material class	CTI 600		
Rated wiring solid wire	0.34 - 2.0 mm²		
Rated wiring stranded wire	0.34 - 2.0 mm²		
Rated wiring solid wire	AWG 22 - 14		
Rated wiring stranded wire	AWG 22 - 14		
Clearance and creepage distances	2.6 mm		
Solder pin dimension	0.9 mm		
Recommended pc board hole dia.	ø 1.3 mm		
Solder pin length	3.4 mm		
Protection category according to IEC 60529	IP 10		
Min. insul. strip length	6 mm		
Color	gray		

Dimensional drawing

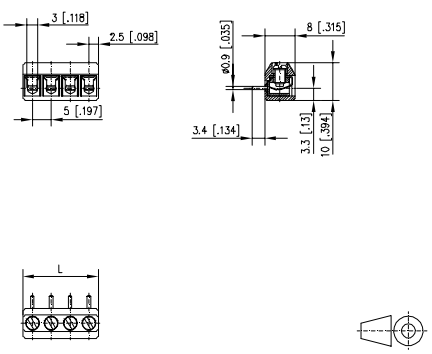

L = (Pole size - 1) * centerline + 5 mm (0.197 in.)

P/N

310631 ☐

Complete the part number by adding the pole size.

	02	03	04	05	06	07	08
09	10	11	12	13	14	15	16
17	18	19	20	21	22		

(Information: page 67)

Standard pole sizes

Product family	Pole size	Color	Option	
RT09	5xx	V	B	W	C	*(Type 147)
	Centerline	Design	Function	*old product name

- screw type terminal block, solderable
- centerline 5.00 mm, direction of connection vertical 0°
- wire protector, fittable without loss of poles
- color black

Technical data

cULus V / A / AWG 300 / 15 / 22 - 14

SEV 1.5 mm² 250 V / 17.5 A / T60

Overvoltage category	III	III	II
Pollution degree	3	2	2
Rated voltage	320 V	800 V	800 V
Rated test voltage	4 kV	4.0 kV	4 kV
Insulating material class	CTI 600		
Rated wiring solid wire	0.34 - 2.0 mm²		
Rated wiring stranded wire	0.34 - 2.0 mm²		
Rated wiring solid wire	AWG 22 - 14		
Rated wiring stranded wire	AWG 22 - 14		
Clearance and creepage distances	4 mm		
Solder pin dimension	1.0 mm		
Recommended pc board hole dia.	ø 1.3 mm		
Solder pin length	3.25 mm		
Protection category according to IEC 60529	IP 00		
Min. insul. strip length	8 mm		
Color	black		

Dimensional drawing

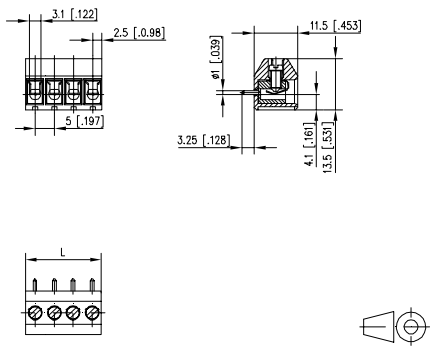

L = (Pole size - 1) * centerline + 5 mm (0.197 in.)

P/N

311471 ☐

Complete the part number by adding the pole size.

	02	03	04	05	06	07	08
09	10	11	12	13	14	15	16
17	18	19	20	21	22	23	24

(Information: page 67)

■ Standard pole sizes

Product family	Pole size	Color	Option	
RT01	6xx	H	B	W	C	*(Type 101)
Centerline		Design	Function	*old product name

- screw type terminal block, solderable
- centerline 5.08 mm, direction of connection 90°
- wire protector, fittable without loss of poles
- color black

Technical data

cULus V / A / AWG 300 / 15 / 28 - 14

SEV 1.5 mm² 130 V / 13 A / T60

Overvoltage category	III	III	II
Pollution degree	3	2	2
Rated voltage	200 V	500 V	500 V
Rated test voltage	2.5 kV	2.5 kV	2.5 kV
Insulating material class	CTI 600		
Rated wiring solid wire	0.34 - 2.0 mm²		
Rated wiring stranded wire	0.34 - 2.0 mm²		
Rated wiring solid wire	AWG 28 - 14		
Rated wiring stranded wire	AWG 28 - 14		
Clearance and creepage distances	2.7 mm		
Solder pin dimension	0.9 mm		
Recommended pc board hole dia.	ø 1.3 mm		
Solder pin length	3.8 mm		
Protection category according to IEC 60529	IP 10		
Min. insul. strip length	6 mm		
Color	black		

Dimensional drawing

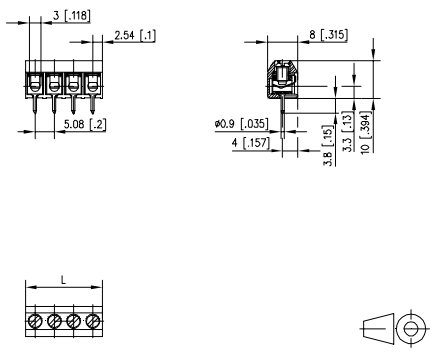

L = (Pole size - 1) * centerline + 5.08 mm (0.200 in.)

P/N

311011 ☐

Complete the part number by adding the pole size.

	02	03	04	05	06	07	08
09	10	11	12	13	14	15	16
17	18	19	20	21	22		

(Information: page 67)

Standard pole sizes

Product family	Pole size	Color	Option			
RT05	6xx	H	B	L	U	*(Type 015)
Centerline		Design	Function			*old product name

- screw type terminal block, solderable
- centerline 5.08 mm, direction of connection 90°
- lift system, modular
- color black

Technical data

cULus V / A / AWG 300 / 15 / 22 - 14

SEV 1.5 mm² 250 V / 17.5 A / T60

Overvoltage category	III	III	II
Pollution degree	3	2	2
Rated voltage	250 V	630 V	630 V
Rated test voltage	4.0 kV	4.0 kV	4 kV
Insulating material class	CTI 600		
Rated wiring solid wire	0.34 - 2.0 mm²		
Rated wiring stranded wire	0.34 - 2.0 mm²		
Rated wiring solid wire	AWG 22 - 14		
Rated wiring stranded wire	AWG 22 - 14		
Clearance and creepage distances	3.9 mm		
Solder pin dimension	0.8 x 1.0 mm		
Recommended pc board hole dia.	ø 1.4 mm		
Solder pin length	4.1 mm		
Protection category according to IEC 60529	IP 20		
Min. insul. strip length	7 mm		
Color	black		

Dimensional drawing

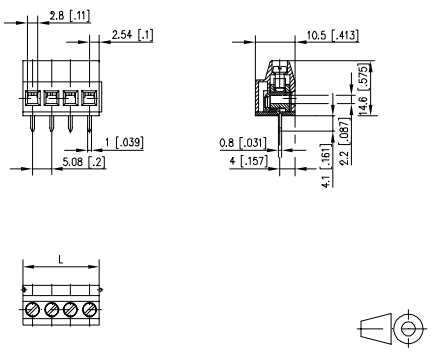

L = (Pole size - 1) * centerline + 5.08 mm (0.200 in.)

P/N

310151 ☐

Complete the part number by adding the pole size.

	02	03					

(Information: page 67)

Standard pole sizes

Product family	Pole size	Color	Option	
RT03	6xx	H	B	L U *(Type 095)
Centerline		Design	Function	*old product name

- screw type terminal block, solderable
- centerline 5.08 mm, direction of connection 90°
- lift system, modular
- color black

Technical data

V / A / AWG 300 / 10 / 26 - 16

1.5 mm² 250 V / 17.5 A / T60

Overvoltage category	III	III	II
Pollution degree	3	2	2
Rated voltage	250 V	630 V	630 V
Rated test voltage	4.0 kV	4.0 kV	4 kV
Insulating material class	CTI 600		
Rated wiring solid wire	0.2 - 1.5 mm²		
Rated wiring stranded wire	0.2 - 1 mm²		
Rated wiring solid wire	AWG 26 - 16		
Rated wiring stranded wire	AWG 26 - 16		
Clearance and creepage distances	3.2 mm		
Solder pin dimension	0.5 x 1.0 mm		
Recommended pc board hole dia.	ø 1.3 mm		
Solder pin length	3.4 mm		
Protection category according to IEC 60529	IP 20		
Min. insul. strip length	6 mm		
Color	black		

Dimensional drawing

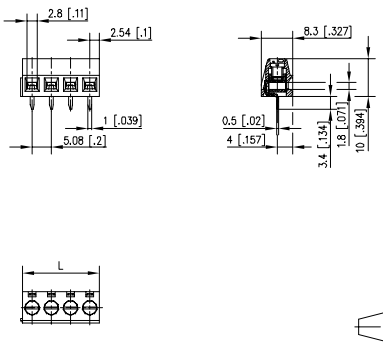

L = (Pole size - 1) * centerline + 5.08 mm (0.200 in.)

P/N
310951 ☐

Complete the part number by adding the pole size.

	02	03					

(Information: page 67)

Standard pole sizes

Product family	Pole size	Color	Option	
RT04	6xx	H	B	W U *(Type 083)
Centerline		Design	Function	*old product name

- screw type terminal block, solderable
- centerline 5.08 mm, direction of connection 90°
- wire protector, modular
- color black

Technical data

V / A / AWG 300 / 20 / 22 - 14

2.5 mm² 250 V / 24 A / T60

Overvoltage category	III	III	II
Pollution degree	3	2	2
Rated voltage	250 V	630 V	630 V
Rated test voltage	4.0 kV	4.0 kV	4 kV
Insulating material class	CTI 600		
Rated wiring solid wire	0.34 - 2.5 mm²		
Rated wiring stranded wire	0.34 - 2.5 mm²		
Rated wiring solid wire	AWG 22 - 12		
Rated wiring stranded wire	AWG 22 - 12		
Clearance and creepage distances	3.9 mm		
Solder pin dimension	0.9 mm		
Recommended pc board hole dia.	ø 1.3 mm		
Solder pin length	4 mm		
Protection category according to IEC 60529	IP 20		
Min. insul. strip length	8 mm		
Color	black		

Dimensional drawing

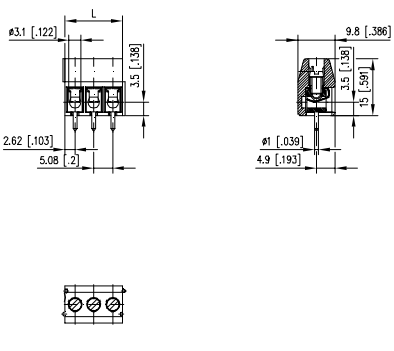

L = (Pole size - 1) * centerline + 5.08 mm (0.200 in.)

P/N
310831 ☐

Complete the part number by adding the pole size.

	02	03					

(Information: page 67)

Standard pole sizes

Accessories

for **RT076xxHBLU**	Page
711401	294

Product family | Pole size | Color | Option

RT076xxHBLU *(Type 093)

Centerline | Design | Function | *old product name

- screw type terminal block, solderable, double solder pins
- centerline 5.08 mm, direction of connection 90°
- lift system, modular
- color black
- double stacked

Technical data

V / A / AWG 300 / 10 / 26 - 16

1.5 mm² 250 V / 17.5 A / T60

Overvoltage category	III	III	II
Pollution degree	3	2	2
Rated voltage	250 V	630 V	630 V
Rated test voltage	4.0 kV	4.0 kV	4 kV
Insulating material class	CTI 600		
Rated wiring solid wire	0.34 - 1.5 mm²		
Rated wiring stranded wire	0.34 - 1.5 mm²		
Rated wiring solid wire	AWG 26 - 16		
Rated wiring stranded wire	AWG 26 - 16		
Clearance and creepage distances	3.2 mm		
Solder pin dimension	2 x 0.5 x 1.0 mm		
Recommended pc board hole dia.	ø 1.3 mm		
Solder pin length	3.4 mm		
Protection category according to IEC 60529	IP 10		
Min. insul. strip length	6 mm		
Color	black		

Dimensional drawing

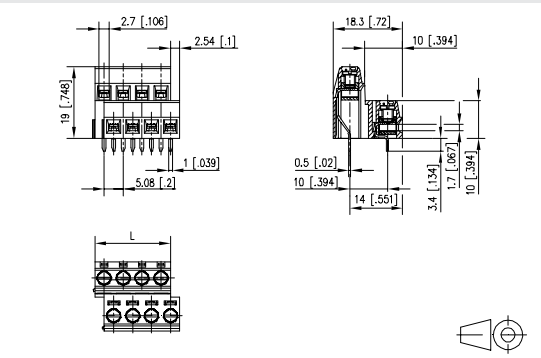

L = (Pole size - 1) * centerline + 5.08 mm (0.200 in.)

P/N

310931 ☐

Complete the part number by adding the pole size.

	04	06	08	10	12	14	16

(Information: page 67)

Standard pole sizes

Product family | Pole size | Color | Option

RT206xxHBLU *(Type 097)

Centerline | Design | Function | *old product name

- screw type terminal block, solderable, double solder pins
- centerline 5.08 mm, direction of connection 90°
- lift system, modular
- color black
- double stacked

Technical data

V / A / AWG 300 / 20 / 22 - 12

2.5 mm² 250 V / 24 A / T60

Overvoltage category	III	III	II
Pollution degree	3	2	2
Rated voltage	320 V	800 V	800 V
Rated test voltage	4 kV	4.0 kV	4 kV
Insulating material class	CTI 600		
Rated wiring solid wire	0.34 - 2.5 mm²		
Rated wiring stranded wire	0.34 - 2.5 mm²		
Rated wiring solid wire	AWG 22 - 12		
Rated wiring stranded wire	AWG 22 - 12		
Clearance and creepage distances	4 mm		
Solder pin dimension	2 x 0.8 x 1.0 mm		
Recommended pc board hole dia.	ø 1.4 mm		
Solder pin length	5 mm		
Protection category according to IEC 60529	IP 20		
Min. insul. strip length	6 mm		
Color	black		

Dimensional drawing

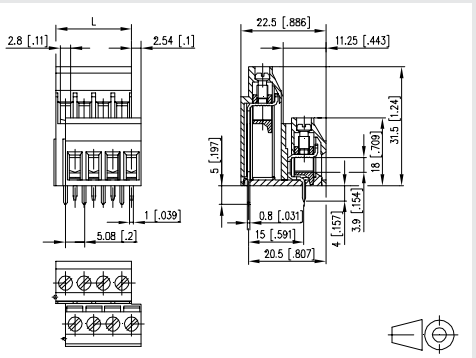

L = (Pole size - 1) * centerline + 5.08 mm (0.200 in.)

P/N

310971 ☐

Complete the part number by adding the pole size.

	04	06					

(Information: page 67)

Standard pole sizes

Product family	Pole size	Color	Option	
RT02	6xx	H	B	L U *(Type 073)
Centerline		Design	Function	*old product name

- screw type terminal block, solderable
- centerline 5.08 mm, direction of connection 90°
- lift system, modular
- color black
- Max. recommended number of poles: 6

Technical data

cULus V / A / AWG 300 / 20 / 22 - 12

SEV 2.5 mm² 250 V / 16 A / T60

Overvoltage category	III	III	II
Pollution degree	3	2	2
Rated voltage	320 V	800 V	800 V
Rated test voltage	4 kV	4.0 kV	4 kV
Insulating material class	CTI 600		
Rated wiring solid wire	0.34 - 2.5 mm²		
Rated wiring stranded wire	0.34 - 2.5 mm²		
Rated wiring solid wire	AWG 22 - 12		
Rated wiring stranded wire	AWG 22 - 12		
Clearance and creepage distances	4 mm		
Solder pin dimension	0.8 x 1.0 mm		
Recommended pc board hole dia.	ø 1.4 mm		
Solder pin length	4.1 mm		
Protection category according to IEC 60529	IP 20		
Min. insul. strip length	8 mm		
Color	black		

Dimensional drawing

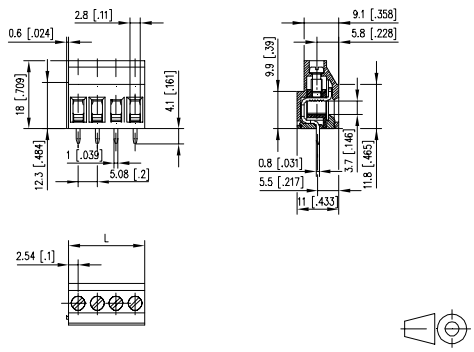

L = (Pole size - 1) * centerline + 5 mm (0.197 in.)

P/N
310731 ☐

Complete the part number by adding the pole size.

	02	03				

(Information: page 67)

Standard pole sizes

Product family	Pole size	Color	Option	
RT01	6xx	V	B	W C *(Type 163)
Centerline		Design	Function	*old product name

- screw type terminal block, solderable
- centerline 5.08 mm, direction of connection vertical 0°
- wire protector, fittable without loss of poles
- color black

Technical data

cULus V / A / AWG 300 / 15 / 28 - 14

SEV 1.5 mm² 130 V / 13 A / T60

Overvoltage category	III	III	II
Pollution degree	3	2	2
Rated voltage	200 V	500 V	500 V
Rated test voltage	2.5 kV	2.5 kV	2.5 kV
Insulating material class	CTI 600		
Rated wiring solid wire	0.34 - 2 mm²		
Rated wiring stranded wire	0.34 - 1.5 mm²		
Rated wiring solid wire	AWG 28 - 14		
Rated wiring stranded wire	AWG 28 - 14		
Clearance and creepage distances	2.6 mm		
Solder pin dimension	0.9 mm		
Recommended pc board hole dia.	ø 1.3 mm		
Solder pin length	3.4 mm		
Protection category according to IEC 60529	IP 10		
Min. insul. strip length	6 mm		
Color	black		

Dimensional drawing

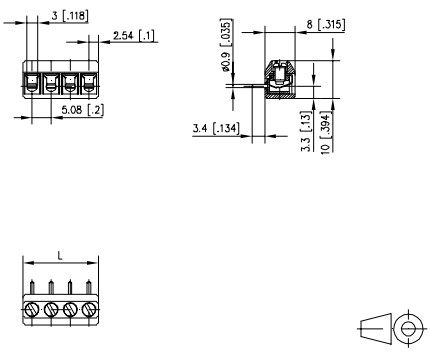

L = (Pole size - 1) * centerline + 5.08 mm (0.200 in.)

P/N
311631 ☐

Complete the part number by adding the pole size.

	02	03	04	05	06	07	08
09	10	11	12	13	14	15	16

(Information: page 67)

Standard pole sizes

Product family	Pole size	Color	Option
RT11	LxxH	G	L U
Centerline	Design	Function	

*(Type 701)

*old product name

- screw type terminal block, solderable
- centerline 6.35 mm, direction of connection 90°
- lift system, modular
- color green

Technical data

c UL us V / A / AWG 300 / 30 / 26 - 10

SEV 4 mm² 450 V / 32 A / T60

Overvoltage category	III	III	II
Pollution degree	3	2	2
Rated voltage	400 V	1000 V	1000 V
Rated test voltage	4 kV	4.0 kV	4.0 kV
Insulating material class	CTI 600		
Rated wiring solid wire	0.2 - 4 mm²		
Rated wiring stranded wire	0.2 - 4 mm²		
Rated wiring solid wire	AWG 26 - 10		
Rated wiring stranded wire	AWG 26 - 10		
Clearance and creepage distances	5 mm		
Solder pin dimension	0.8 x 1.0 mm		
Recommended pc board hole dia.	ø 1.3 mm		
Solder pin length	4.5 mm		
Protection category according to IEC 60529	IP 20		
Min. insul. strip length	7 mm		
Color	green		

Dimensional drawing

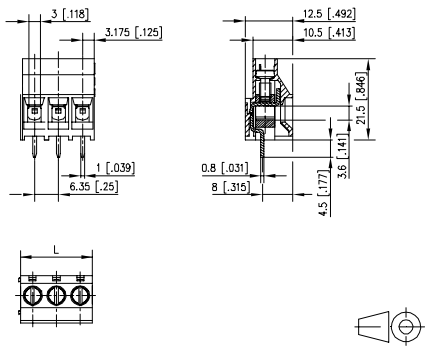

L = (Pole size - 1) * centerline + 6.35 mm (0.250 in.)

P/N

317011 ☐

Complete the part number by adding the pole size.

	02	03					

(Information: page 67)

■ Standard pole sizes

Product family	Pole size	Color	Option
RT13	7	xx	H B W C

Centerline | Design | Function

*(Type 171) *old product name

- screw type terminal block, solderable
- centerline 7.50 mm, direction of connection 90°
- wire protector, fittable without loss of poles
- color black

Technical data

cULus V / A / AWG 300 / 15 / 26 - 14

SEV 2.5 mm² 450 V / 24 A / T60

Overvoltage category	III	III	II
Pollution degree	3	2	2
Rated voltage	400 V	1000 V	1000 V
Rated test voltage	6.0 kV	6.0 kV	6 kV
Insulating material class	CTI 600		
Rated wiring solid wire	0.12 - 2.5 mm²		
Rated wiring stranded wire	0.12 - 1.5 mm²		
Rated wiring solid wire	AWG 26 - 14		
Rated wiring stranded wire	AWG 26 - 14		
Clearance and creepage distances	5.8 mm		
Solder pin dimension	1.0 mm		
Recommended pc board hole dia.	ø 1.3 mm		
Solder pin length	2.8 mm		
Protection category according to IEC 60529	IP 20		
Min. insul. strip length	8 mm		
Color	black		

Dimensional drawing

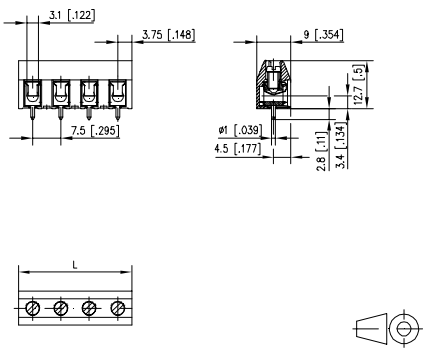

L = (Pole size - 1) * centerline + 7.5 mm (0.295 in.)

P/N
311711 ☐

Complete the part number by adding the pole size.

	02	03	04	05	06	07	08
09	10	11	12				

(Information: page 67)

■ Standard pole sizes

Product family	Pole size	Color	Option
RT02	7	xx	H B L C

Centerline | Design | Function

*(Type 175) *old product name

- screw type terminal block, solderable
- centerline 7.50 mm, direction of connection 90°
- lift system, fittable without loss of poles
- color black

Technical data

cULus V / A / AWG 300 / 20 / 22 - 12

SEV 2.50 mm² 750 V / 24 A / T60

Overvoltage category	III	III	II
Pollution degree	3	2	2
Rated voltage	500 V	1250 V	1250 V
Rated test voltage	6.0 kV	6.0 kV	6 kV
Insulating material class	CTI 600		
Rated wiring solid wire	0.34 - 4 mm²		
Rated wiring stranded wire	0.34 - 4 mm²		
Rated wiring solid wire	AWG 22 - 12		
Rated wiring stranded wire	AWG 22 - 12		
Clearance and creepage distances	6.5 mm		
Solder pin dimension	0.8 x 1.0 mm		
Recommended pc board hole dia.	ø 1.4 mm		
Solder pin length	4.1 mm		
Protection category according to IEC 60529	IP 20		
Min. insul. strip length	8 mm		
Color	black		

Dimensional drawing

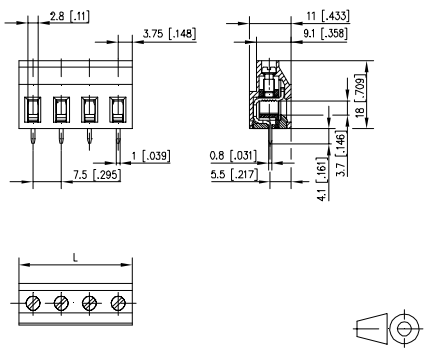

L = (Pole size - 1) * centerline + 7.5 mm (0.295 in.)

P/N
311751 ☐

Complete the part number by adding the pole size.

	02	03	04	05	06	07	08
09	10	11	12				

(Information: page 67)

■ Standard pole sizes

Product family	Pole size	Color	Option
RT10	Nxx	HG	LU

*(Type 703)

Centerline Design Function

*old product name

- screw type terminal block, solderable
- centerline 9.52 mm, direction of connection 90°
- lift system, modular
- color green

Technical data

c UL us V / A / AWG 300 / 30 / 26 - 10

SEV 4 mm² 800 V / 32 A / T60

Overvoltage category	III	III	II
Pollution degree	3	2	2
Rated voltage	630 V	1600 V	1600 V
Rated test voltage	8.0 kV	8 kV	8.0 kV
Insulating material class	CTI 600		
Rated wiring solid wire	0.2 - 4 mm²		
Rated wiring stranded wire	0.2 - 4 mm²		
Rated wiring solid wire	AWG 26 - 10		
Rated wiring stranded wire	AWG 26 - 10		
Clearance and creepage distances	8.5 mm		
Solder pin dimension	0.8 x 1.0 mm		
Recommended pc board hole dia.	ø 1.3 mm		
Solder pin length	4.5 mm		
Protection category according to IEC 60529	IP 20		
Min. insul. strip length	7 mm		
Color	green		

Dimensional drawing

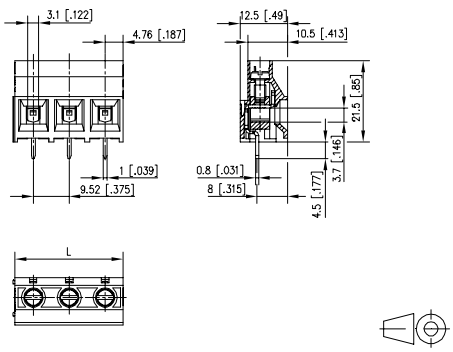

L = (Pole size - 1) * centerline + 9.52 mm (0.375 in.)

P/N

317031 ☐

Complete the part number by adding the pole size.

	02	03					

(Information: page 67)

■ Standard pole sizes

Product family | Pole size | Color | Option

RT019xxHDWC *(Type 001)

Centerline | Design | Function | *old product name

- screw type terminal block, solderable
- centerline 10.00 mm, direction of connection 90°
- wire protector, fittable without loss of poles
- color gray

Technical data

cULus V / A / AWG 600 / 15 / 22 - 14

SEV 1.5 mm² 750 V / 13 A / T60

Overvoltage category	III	III	II
Pollution degree	3	2	2
Rated voltage	500 V	1250 V	1250 V
Rated test voltage	6.0 kV	6.0 kV	6 kV
Insulating material class	CTI 600		
Rated wiring solid wire	0.34 - 2 mm²		
Rated wiring stranded wire	0.34 - 2 mm²		
Rated wiring solid wire	AWG 22 - 14		
Rated wiring stranded wire	AWG 22 - 14		
Clearance and creepage distances	7.6 mm		
Solder pin dimension	0.9 mm		
Recommended pc board hole dia.	ø 1.3 mm		
Solder pin length	3.8 mm		
Protection category according to IEC 60529	IP 10		
Min. insul. strip length	6 mm		
Color	gray		

Dimensional drawing

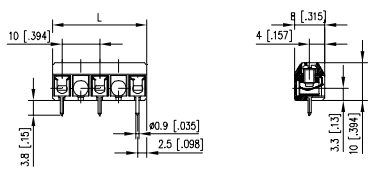

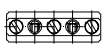

L = (Pole size - 1) * centerline + 5 mm (0.197 in.)

P/N

310012 ☐

Complete the part number by adding the pole size.

	02	03	04	05	06	07	08
09	10	11					

(Information: page 67)

Standard pole sizes

Product family | Pole size | Color | Option

RT019xxHDWC *(Type 067)

Centerline | Design | Function | *old product name

- screw type terminal block, solderable
- centerline 10.00 mm, direction of connection 90°
- wire protector
- color gray

Technical data

cULus V / A / AWG 300 / 15 / 22 - 14

SEV 1.5 mm² 750 V / 13 A / T60

Overvoltage category	III	III	II
Pollution degree	3	2	2
Rated voltage	630 V	1600 V	1600 V
Rated test voltage	8.0 kV	8 kV	8.0 kV
Insulating material class	CTI 600		
Rated wiring solid wire	0.34 - 2.5 mm²		
Rated wiring stranded wire	0.34 - 1.5 mm²		
Rated wiring solid wire	AWG 22 - 14		
Rated wiring stranded wire	AWG 22 - 14		
Clearance and creepage distances	9.1 mm		
Solder pin dimension	0.9 mm		
Recommended pc board hole dia.	ø 1.3 mm		
Solder pin length	3.8 mm		
Protection category according to IEC 60529	IP 10		
Min. insul. strip length	7 mm		
Color	gray		

Dimensional drawing

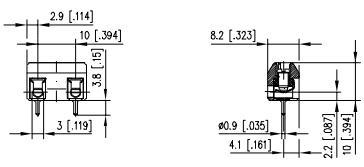

L = (Pole size - 1) * centerline + 5.8 mm (0.228 in.)

P/N

310671 ☐

Complete the part number by adding the pole size.

	02						

(Information: page 67)

Standard pole sizes

Product family | Pole size | Color | Option

RT139xxHBWC *(Type 271)

Centerline | Design | Function | *old product name

- screw type terminal block, solderable
- centerline 10.00 mm, direction of connection 90°
- wire protector, fittable without loss of poles
- color black

Technical data

cULus V / A / AWG	300 / 15 / 26 - 14		
SEV 2.5 mm²	750 V / 24 A / T60		
Overvoltage category	III	III	II
Pollution degree	3	2	2
Rated voltage	630 V	1600 V	1600 V
Rated test voltage	8.0 kV	8 kV	8.0 kV
Insulating material class	CTI 600		
Rated wiring solid wire	0.08 - 4 mm²		
Rated wiring stranded wire	0.08 - 2.5 mm²		
Rated wiring solid wire	AWG 26 - 14		
Rated wiring stranded wire	AWG 26 - 14		
Clearance and creepage distances	8.8 mm		
Solder pin dimension	1.0 mm		
Recommended pc board hole dia.	ø 1.3 mm		
Solder pin length	4 mm		
Protection category according to IEC 60529	IP 20		
Min. insul. strip length	8 mm		
Color	black		

Dimensional drawing

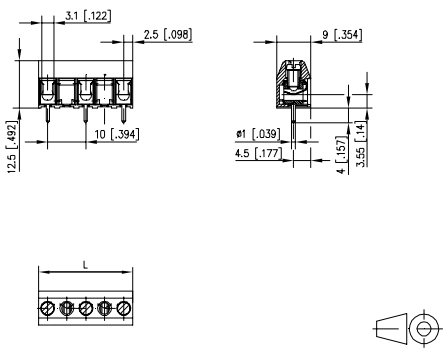

L = (Pole size - 1) * centerline + 5 mm (0.197 in.)

P/N

312712 ☐

Complete the part number by adding the pole size.

	02	03	04	05	06	07	08
09	10	11	12				

(Information: page 67)

Standard pole sizes

Product family | Pole size | Color | Option

RT049xxHBWC *(Type 003)

Centerline | Design | Function | *old product name

- screw type terminal block, solderable
- centerline 10.00 mm, direction of connection 90°
- wire protector, fittable without loss of poles
- color black

Technical data

cULus V / A / AWG	600 / 20 / 22 - 12		
SEV 2.5 mm²	630 V / 24 A / T60		
Overvoltage category	III	III	II
Pollution degree	3	2	2
Rated voltage	630 V	1600 V	1600 V
Rated test voltage	8.0 kV	8 kV	8.0 kV
Insulating material class	CTI 600		
Rated wiring solid wire	0.34 - 2.5 mm²		
Rated wiring stranded wire	0.34 - 2.5 mm²		
Rated wiring solid wire	AWG 22 - 12		
Rated wiring stranded wire	AWG 22 - 12		
Clearance and creepage distances	8.9 mm		
Solder pin dimension	1.0 mm		
Recommended pc board hole dia.	ø 1.3 mm		
Solder pin length	4 mm		
Protection category according to IEC 60529	IP 20		
Min. insul. strip length	8 mm		
Color	black		

Dimensional drawing

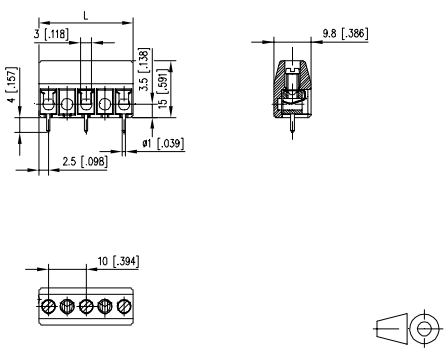

L = (Pole size - 1) * centerline + 5 mm (0.197 in.)

P/N

310032 ☐

Complete the part number by adding the pole size.

	02	03	04	05	06	07	08
09	10	11	12				

(Information: page 67)

Standard pole sizes

Product family | Pole size | Color | Option

RT049xxMBWC *(Type 069)

Centerline | Design | Function | *old product name

- screw type terminal block, solderable, double solder pins
- centerline 10.00 mm, direction of connection 90°
- wire protector, fittable without loss of poles
- color black

Technical data

cULus V / A / AWG 600 / 20 / 22 - 12

SEV 2.5 mm² 630 V / 24 A / T60

Overvoltage category	III	III	II
Pollution degree	3	2	2
Rated voltage	630 V	1600 V	1600 V
Rated test voltage	8.0 kV	8 kV	8.0 kV
Insulating material class	CTI 600		
Rated wiring solid wire	0.34 - 2.5 mm²		
Rated wiring stranded wire	0.34 - 2.5 mm²		
Rated wiring solid wire	AWG 22 - 12		
Rated wiring stranded wire	AWG 22 - 12		
Clearance and creepage distances	8.9 mm		
Solder pin dimension	2 x 0.9 x 0.9 mm		
Recommended pc board hole dia.	ø 1.4 mm		
Solder pin length	3.5 mm		
Protection category according to IEC 60529	IP 20		
Min. insul. strip length	8 mm		
Color	black		

Dimensional drawing

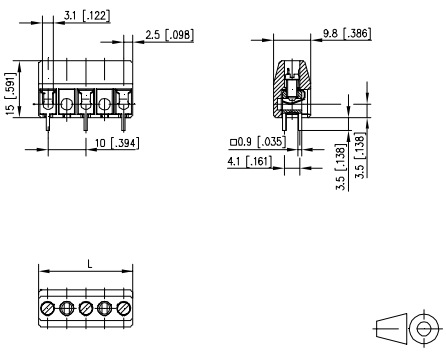

L = (Pole size - 1) * centerline + 5 mm (0.197 in.)

P/N

310692 ☐

Complete the part number by adding the pole size.

	02	03	04	05	06	07	08
09	10	11	12				

(Information: page 67)

Standard pole sizes

Product family | Pole size | Color | Option

RT059xxHBLC *(Type 011)

Centerline | Design | Function | *old product name

- screw type terminal block, solderable
- centerline 10.00 mm, direction of connection 90°
- lift system, fittable without loss of poles
- color black

Technical data

cULus V / A / AWG 600 / 15 / 22 - 14

SEV 1.5 mm² 500 V / 17.5 A / T60

Overvoltage category	III	III	II
Pollution degree	3	2	2
Rated voltage	630 V	1600 V	1600 V
Rated test voltage	8.0 kV	8 kV	8.0 kV
Insulating material class	CTI 600		
Rated wiring solid wire	0.34 - 2.5 mm²		
Rated wiring stranded wire	0.34 - 2.5 mm²		
Rated wiring solid wire	AWG 28 - 12		
Rated wiring stranded wire	AWG 28 - 12		
Clearance and creepage distances	8.9 mm		
Solder pin dimension	0.8 x 1.0 mm		
Recommended pc board hole dia.	ø 1.4 mm		
Solder pin length	4.1 mm		
Protection category according to IEC 60529	IP 20		
Min. insul. strip length	7 mm		
Color	black		

Dimensional drawing

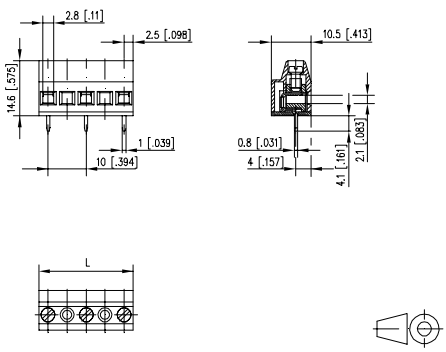

L = (Pole size - 1) * centerline + 5 mm (0.197 in.)

P/N

310112 ☐

Complete the part number by adding the pole size.

	02	03	04	05	06	07	08

(Information: page 67)

Standard pole sizes

Product family | Pole size | Color | Option

RT029xxHBLC *(Type 071)

Centerline | Design | Function | *old product name

- screw type terminal block, solderable
- centerline 10.00 mm, direction of connection 90°
- lift system, fittable without loss of poles
- color black

Technical data

cULus V / A / AWG 600 / 20 / 22 - 12

SEV 2.5 mm² 750 V / 24 A / T60

Overvoltage category	III	III	II
Pollution degree	3	2	2
Rated voltage	630 V	1600 V	1600 V
Rated test voltage	8.0 kV	8 kV	8.0 kV
Insulating material class	CTI 600		
Rated wiring solid wire	0.34 - 2.5 mm²		
Rated wiring stranded wire	0.34 - 2.5 mm²		
Rated wiring solid wire	AWG 22 - 12		
Rated wiring stranded wire	AWG 22 - 12		
Clearance and creepage distances	9 mm		
Solder pin dimension	0.8 x 1.0 mm		
Recommended pc board hole dia.	ø 1.4 mm		
Solder pin length	4.1 mm		
Protection category according to IEC 60529	IP 20		
Min. insul. strip length	8 mm		
Color	black		

Dimensional drawing

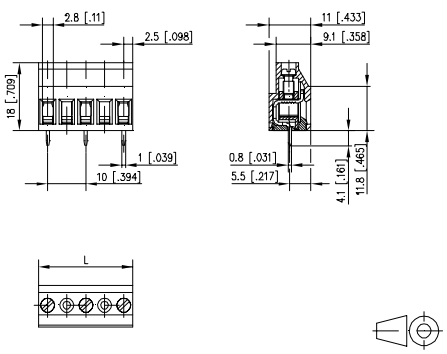

L = (Pole size - 1) * centerline + 5 mm (0.197 in.)

P/N

310712 ☐

Complete the part number by adding the pole size.

	02	03	04	05	06	07	08
09	10	11	12				

(Information: page 67)

Standard pole sizes

Product family | Pole size | Color | Option

RT149xxMBLC *(Type 269)

Centerline | Design | Function | *old product name

- screw type terminal block, solderable, double solder pins
- centerline 10.00 mm, direction of connection 90°
- lift system, fittable without loss of poles
- color black

Technical data

cULus V / A / AWG 600 / 15 / 28 - 12

SEV 2.5 mm² 630 V / 16 A / T60

Overvoltage category	III	III	II
Pollution degree	3	2	2
Rated voltage	630 V	1600 V	1600 V
Rated test voltage	8.0 kV	8 kV	8.0 kV
Insulating material class	CTI 600		
Rated wiring solid wire	0.08 - 4 mm²		
Rated wiring stranded wire	0.08 - 2.5 mm²		
Rated wiring solid wire	AWG 28 - 12		
Rated wiring stranded wire	AWG 28 - 12		
Clearance and creepage distances	9 mm		
Solder pin dimension	2 x 0.8 x 1.0 mm		
Recommended pc board hole dia.	ø 1.4 mm		
Solder pin length	3.2 mm		
Protection category according to IEC 60529	IP 20		
Min. insul. strip length	8 mm		
Color	black		

Dimensional drawing

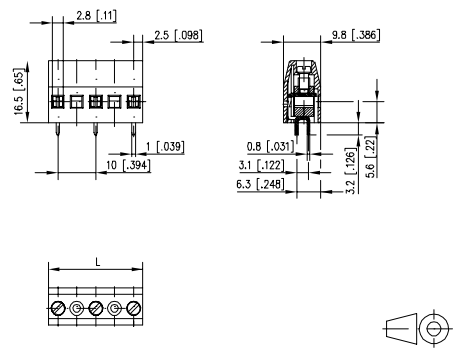

L = (Pole size - 1) * centerline + 5 mm (0.197 in.)

P/N

312692 ☐

Complete the part number by adding the pole size.

	02	03	04	05	06	07	08
09	10	11	12				

(Information: page 67)

Standard pole sizes

Product family | Pole size | Color | Option

RT049xxUBLC *(Type 205)

Centerline | Design | Function | *old product name

- screw type terminal block, solderable
- centerline 10.00 mm, direction of connection 55°
- lift system, fittable without loss of poles
- color black

Technical data

cULus V / A / AWG	600 / 15 / 28 - 12		
SEV 2.5 mm²	250 V / 24 A / T60		
Overvoltage category	III	III	II
Pollution degree	3	2	2
Rated voltage	630 V	1600 V	1600 V
Rated test voltage	8.0 kV	8 kV	8.0 kV
Insulating material class	CTI 600		
Rated wiring solid wire	0.34 - 4 mm²		
Rated wiring stranded wire	0.34 - 2.5 mm²		
Rated wiring solid wire	AWG 28 - 12		
Rated wiring stranded wire	AWG 28 - 12		
Clearance and creepage distances	8.2 mm		
Solder pin dimension	0.8 x 1.0 mm		
Recommended pc board hole dia.	ø 1.4 mm		
Solder pin length	3.4 mm		
Protection category according to IEC 60529	IP 20		
Min. insul. strip length	7 mm		
Color	black		

Dimensional drawing

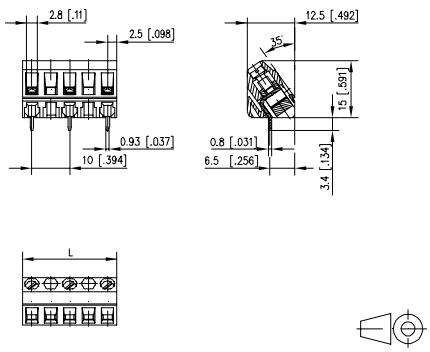

L = (Pole size - 1) * centerline + 5 mm (0.197 in.)

P/N
312052 ☐

Complete the part number by adding the pole size.

	02	03	04	05	06	07	08
09	10	11	12				

(Information: page 67)

Standard pole sizes

Product family | Pole size | Color | Option

RT019xxVDWC *(Type 063)

Centerline | Design | Function | *old product name

- screw type terminal block, solderable
- centerline 10.00 mm, direction of connection vertical 0°
- wire protector, fittable without loss of poles
- color gray

Technical data

cULus V / A / AWG	600 / 15 / 22 - 14		
SEV 1.5 mm²	750 V / 13 A / T60		
Overvoltage category	III	III	II
Pollution degree	3	2	2
Rated voltage	500 V	1250 V	1250 V
Rated test voltage	6.0 kV	6.0 kV	6 kV
Insulating material class	CTI 600		
Rated wiring solid wire	0.34 - 2.0 mm²		
Rated wiring stranded wire	0.34 - 2.0 mm²		
Rated wiring solid wire	AWG 22 - 14		
Rated wiring stranded wire	AWG 22 - 14		
Clearance and creepage distances	7.6 mm		
Solder pin dimension	0.9 mm		
Recommended pc board hole dia.	ø 1.3 mm		
Solder pin length	3.4 mm		
Protection category according to IEC 60529	IP 10		
Min. insul. strip length	6 mm		
Color	gray		

Dimensional drawing

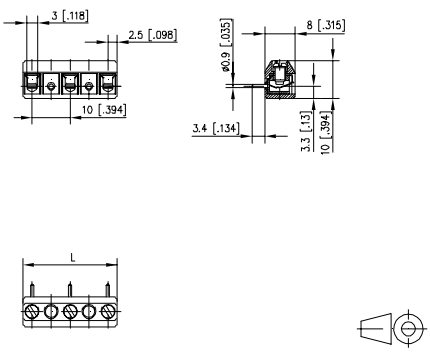

L = (Pole size - 1) * centerline + 5 mm (0.197 in.)

P/N
310632 ☐

Complete the part number by adding the pole size.

	02	03	04	05	06	07	08
09	10	11					

(Information: page 67)

Standard pole sizes

Product family	Pole size	Color	Option	
RT09	9xx	V	B	W C *(Type 147)
Centerline		Design	Function	*old product name

- screw type terminal block, solderable
- centerline 10.00 mm, direction of connection vertical 0°
- wire protector, fittable without loss of poles
- color black

Technical data

c UL us V / A / AWG 600 / 15 / 22 - 14

SEV 1.5 mm² 800 V / 17.5 A / T60

Overvoltage category	III	III	II
Pollution degree	3	2	2
Rated voltage	630 V	1600 V	1600 V
Rated test voltage	8.0 kV	8 kV	8.0 kV
Insulating material class	CTI 600		
Rated wiring solid wire	0.34 - 2.0 mm²		
Rated wiring stranded wire	0.34 - 2.0 mm²		
Rated wiring solid wire	AWG 22 - 14		
Rated wiring stranded wire	AWG 22 - 14		
Clearance and creepage distances	9 mm		
Solder pin dimension	1.0 mm		
Recommended pc board hole dia.	ø 1.3 mm		
Solder pin length	3.25 mm		
Protection category according to IEC 60529	IP 00		
Min. insul. strip length	8 mm		
Color	black		

Dimensional drawing

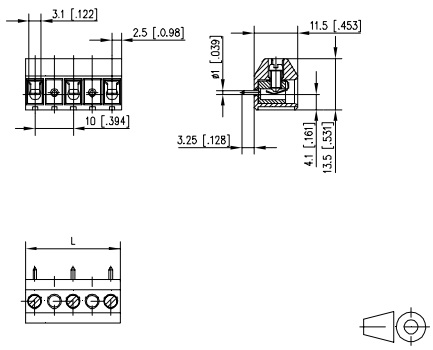

L = (Pole size - 1) * centerline + 5 mm (0.197 in.)

P/N

311472 ☐

Complete the part number by adding the pole size.

	02	03	04	05	06	07	08
09	10	11	12				

(Information: page 67)

■ Standard pole sizes

Product family	Pole size	Color	Option
RT01	A	xx	V	B	W	C	*(Type 163)
Centerline	Design	Function	*old product name

- screw type terminal block, solderable
- centerline 10.16 mm, direction of connection vertical 0°
- wire protector, fittable without loss of poles
- color black

Technical data

cULus V / A / AWG 600 / 15 / 28 - 14

SEV 1.5 mm² 750 V / 13 A / T60

Overvoltage category	III	III	II
Pollution degree	3	2	2
Rated voltage	500 V	1250 V	1250 V
Rated test voltage	6.0 kV	6.0 kV	6 kV
Insulating material class	CTI 600		
Rated wiring solid wire	0.34 - 2 mm²		
Rated wiring stranded wire	0.34 - 1.5 mm²		
Rated wiring solid wire	AWG 28 - 14		
Rated wiring stranded wire	AWG 28 - 14		
Clearance and creepage distances	7.68 mm		
Solder pin dimension	0.9 mm		
Recommended pc board hole dia.	ø 1.3 mm		
Solder pin length	3.4 mm		
Protection category according to IEC 60529	IP 10		
Min. insul. strip length	6 mm		
Color	black		

Dimensional drawing

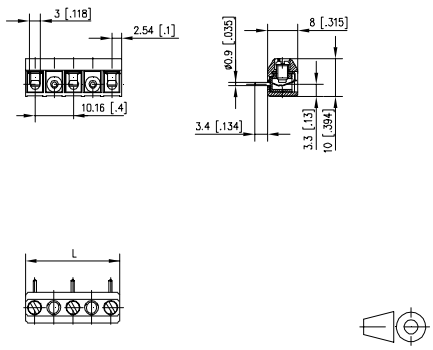

L = (Pole size - 1) * centerline + 5.08 mm (0.200 in.)

P/N

311632 ☐

Complete the part number by adding the pole size.

	02	03	04	05	06	07	08

(Information: page 67)

■ Standard pole sizes

Pin Headers

for **RP023xxHBWC** — **Page**

PR033xxVBHC (Type 224) 150

PM013xxVBHC (Type 424) 153

Accessories

Page

for **RP023xxHBWC**

720158 288

720159 291

Pin Headers

for **RP023xxHBNF** — **Page**

PR013xxVBHC (Type 024) 146

Accessories

Page

for **RP023xxHBNF**

720158 288

720159 291

Product family	Pole size	Color	Option
RP023	xx	H	B	W	C	*(Type 166)
Centerline	Design	Function	*old product name

- screw type terminal block, pluggable
- centerline 3.50 mm, direction of connection 90°
- wire protector, fittable without loss of poles
- color black
- Wire entry perpendicular to plug direction

Technical data

cULus V / A / AWG	125 / 8 / 28 - 16		
SEV 6 A / 200 V / 2.5 kV / 3 / 0.08 - 1 mm² / IEC 61984			
Overvoltage category	III	III	II
Pollution degree	3	2	2
Rated voltage	160 V	400 V	400 V
Rated test voltage	2.5 kV	2.5 kV	2.5 kV
Insulating material class	CTI 600		
Rated wiring solid wire	0.08 - 0.75 mm²		
Rated wiring stranded wire	0.08 - 0.75 mm²		
Rated wiring solid wire	AWG 28 - 18		
Rated wiring stranded wire	AWG 28 - 18		
Clearance and creepage distances	2 mm		
Protection category according to IEC 60529	IP 00		
Min. insul. strip length	5 mm		
Color	black		

Dimensional drawing

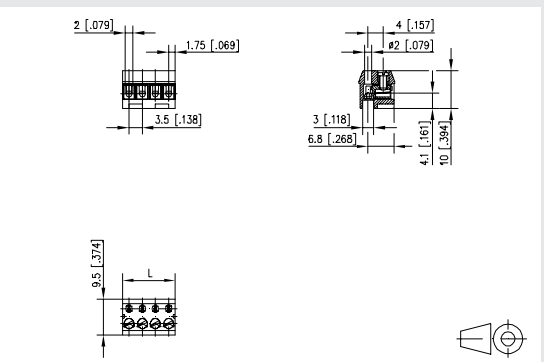

L = (Pole size - 1) * centerline + 3.5 mm (0.138 in.)

P/N

311661 ☐

Complete the part number by adding the pole size.

	02	03	04	05	06	07	08
09	10	11	12	13	14	15	16
17	18	19	20	21	22	23	24

(Information: page 67)

Standard pole sizes

Product family	Pole size	Color	Option
RP023	xx	H	B	N	F	*(Type 165)
Centerline	Design	Function	*old product name

- screw type terminal block, pluggable
- centerline 3.50 mm, direction of connection 90°
- wire protector, fittable without loss of poles
- color black

Technical data

cULus V / A / AWG	125 / 10 / 28 - 16		
SEV 6 A / 200 V / 2.5 kV / 3 / 0.08 - 1 mm² / IEC 61984			
Overvoltage category	III	III	II
Pollution degree	3	2	2
Rated voltage	160 V	400 V	400 V
Rated test voltage	2.5 kV	2.5 kV	2.5 kV
Insulating material class	CTI 600		
Rated wiring solid wire	0.08 - 1.5 mm²		
Rated wiring stranded wire	0.08 - 1.5 mm²		
Rated wiring solid wire	AWG 28 - 16		
Rated wiring stranded wire	AWG 28 - 16		
Clearance and creepage distances	2 mm		
Protection category according to IEC 60529	IP 00		
Min. insul. strip length	5 mm		
Color	black		

Dimensional drawing

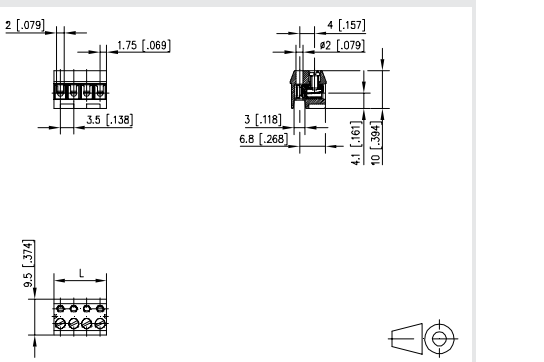

L = (Pole size - 1) * centerline + 3.5 mm (0.138 in.)

P/N

311651 ☐

Complete the part number by adding the pole size.

	02	03	04	05	06	07	08
09	10	11	12	13	14	15	16
17	18	19	20	21	22	23	24

(Information: page 67)

Standard pole sizes

Pin Headers

for **RP043xxHBLC** — Page

Pin Headers

for **RP043xxHBLD** — Page

Product family	Pole size	Color	Option	
RP043	xx	H	B	L C *(Type 614)
Centerline		Design	Function	*old product name

- screw type terminal block, pluggable
- centerline 3.50 mm, direction of connection 90°
- lift system, fittable without loss of poles
- color black
- with alternative face, wire entry uncodeable side perpendicular to plug direction

Technical data

V / A / AWG	300 / 10 / 28 - 16		
10 A / 130 V / 2.5 kV / 3 / 0.34 - 1 mm² / IEC 61984			
Overvoltage category	III	III	II
Pollution degree	3	2	2
Rated voltage	200 V	500 V	500 V
Rated test voltage	2.5 kV	2.5 kV	2.5 kV
Insulating material class	CTI 600		
Rated wiring solid wire	0.08 - 1.5 mm²		
Rated wiring stranded wire	0.08 - 1.5 mm²		
Rated wiring solid wire	AWG 28 - 16		
Rated wiring stranded wire	AWG 28 - 16		
Clearance and creepage distances	2.7 mm		
Protection category according to IEC 60529	IP 20		
Min. insul. strip length	7 mm		
Color	black		

Dimensional drawing

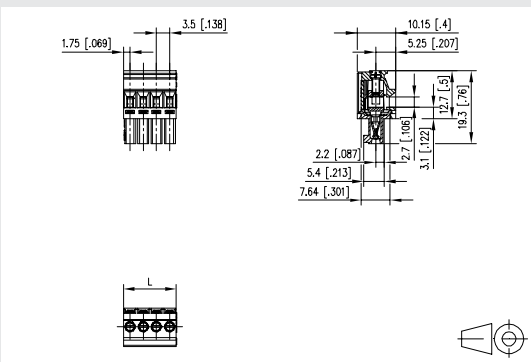

L = (Pole size - 1) * centerline + 3.5 mm (0.138 in.)

P/N **316141** □

Complete the part number by adding the pole size.

	02	03	04	05	06	07	08
09	10	11	12	13	14	15	16
17	18	19	20	21	22	23	24

(Information: page 67)

Standard pole sizes

Product family	Pole size	Color	Option	
RP043	xx	H	B	L D *(Type 613)
Centerline		Design	Function	*old product name

- screw type terminal block, pluggable
- centerline 3.50 mm, direction of connection 90°
- lift system, fittable without loss of poles
- color black
- with alternative face, wire entry codeable side perpendicular to plug direction

Technical data

V / A / AWG	300 / 10 / 28 - 16		
10 A / 130 V / 2.5 kV / 3 / 0.34 - 1 mm² / IEC 61984			
Overvoltage category	III	III	II
Pollution degree	3	2	2
Rated voltage	200 V	500 V	500 V
Rated test voltage	2.5 kV	2.5 kV	2.5 kV
Insulating material class	CTI 600		
Rated wiring solid wire	0.08 - 1.5 mm²		
Rated wiring stranded wire	0.08 - 1.5 mm²		
Rated wiring solid wire	AWG 28 - 16		
Rated wiring stranded wire	AWG 28 - 16		
Clearance and creepage distances	2.7 mm		
Protection category according to IEC 60529	IP 20		
Min. insul. strip length	7 mm		
Color	black		

Dimensional drawing

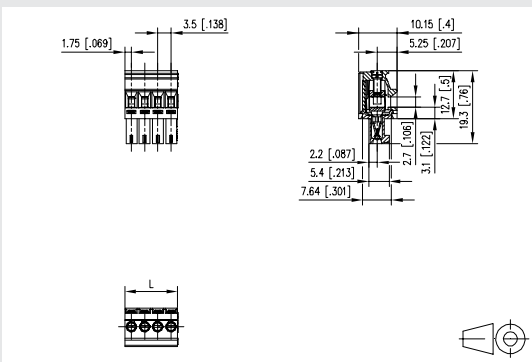

L = (Pole size - 1) * centerline + 3.5 mm (0.138 in.)

P/N **316131** □

Complete the part number by adding the pole size.

	02	03	04	05	06	07	08
09	10	11	12	13	14	15	16
17	18	19	20	21	22	23	24

(Information: page 67)

Standard pole sizes

Pin Headers

for **RP043xxHBLF**

Pin Headers

for **RP043xxHBLS**

Product family	Pole size	Color	Option
RP043	xx	H	B L F
Centerline		Design	Function

*(Type 634)

*old product name

- screw type terminal block, pluggable
- centerline 3.50 mm, direction of connection 90°
- lift system
- color black, mounting flange
- wire entry uncodeable side perpendicular to plug direction

Technical data

cULus V / A / AWG	300 / 10 / 28 - 16		
SEV	10 A / 130 V / 2.5 kV / 3 / 0.34 - 1 mm² / IEC 61984		
Overvoltage category	III	III	II
Pollution degree	3	2	2
Rated voltage	200 V	500 V	500 V
Rated test voltage	2.5 kV	2.5 kV	2.5 kV
Insulating material class	CTI 600		
Rated wiring solid wire	0.08 - 1.5 mm²		
Rated wiring stranded wire	0.08 - 1.5 mm²		
Rated wiring solid wire	AWG 28 - 16		
Rated wiring stranded wire	AWG 28 - 16		
Clearance and creepage distances	2.7 mm		
Protection category according to IEC 60529	IP 20		
Min. insul. strip length	7 mm		
Color	black		

Dimensional drawing

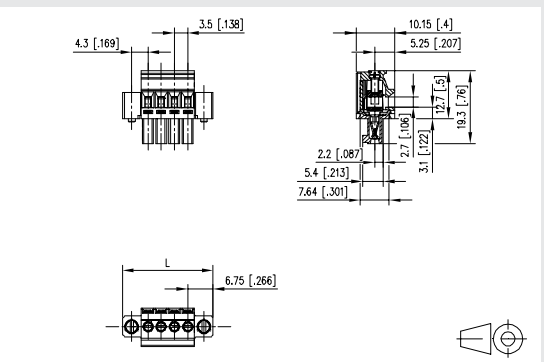

L = (Pole size - 1) * centerline + 13.5 mm (0.531 in.)

P/N

316341 ☐

Complete the part number by adding the pole size.

	02	03	04	05	06	07	08
09	10	11	12	13	14	15	16
17	18	19	20	21	22	23	24

(Information: page 67)

Standard pole sizes

Product family	Pole size	Color	Option
RP043	xx	H	B L S
Centerline		Design	Function

*(Type 633)

*old product name

- screw type terminal block, pluggable
- centerline 3.50 mm, direction of connection 90°
- lift system
- color black, mounting flange
- wire entry codeable side perpendicular to plug direction

Technical data

cULus V / A / AWG	300 / 10 / 28 - 16		
SEV	10 A / 130 V / 2.5 kV / 3 / 0.34 - 1 mm² / IEC 61984		
Overvoltage category	III	III	II
Pollution degree	3	2	2
Rated voltage	200 V	500 V	500 V
Rated test voltage	2.5 kV	2.5 kV	2.5 kV
Insulating material class	CTI 600		
Rated wiring solid wire	0.08 - 1.5 mm²		
Rated wiring stranded wire	0.08 - 1.5 mm²		
Rated wiring solid wire	AWG 28 - 16		
Rated wiring stranded wire	AWG 28 - 16		
Clearance and creepage distances	2.7 mm		
Protection category according to IEC 60529	IP 20		
Min. insul. strip length	7 mm		
Color	black		

Dimensional drawing

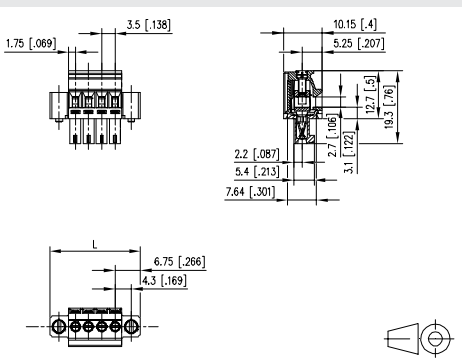

L = (Pole size - 1) * centerline + 13.5 mm (0.531 in.)

P/N

316331 ☐

Complete the part number by adding the pole size.

	02	03	04	05	06	07	08
09	10	11	12	13	14	15	16
17	18	19	20	21	22	23	24

(Information: page 67)

Standard pole sizes

Pin Headers

for **RW043xxHBLC** — Page

PW063xxHBBN (Type 523) 148
PW063xxVBBN (Type 524) 152

Pin Headers

for **RW043xxHBLD** — Page

PW063xxHBBN (Type 523) 148
PW063xxVBBN (Type 524) 152

Product family | Pole size | Color | Option

RW043xxHBLC *(Type 514)

Centerline | Design | Function | *old product name

- screw type terminal block, pluggable
- centerline 3.50 mm, direction of connection 90°
- lift system, fittable without loss of poles
- color black
- with alternative face, wire entry uncodeable side perpendicular to plug direction

Technical data

cULus V / A / AWG	300 / 10 / 28 - 16		
SEV 10 A / 130 V / 2.5 kV / 3 / 0.08 - 1 mm² / IEC 61984			
Overvoltage category	III	III	II
Pollution degree	3	2	2
Rated voltage	200 V	500 V	500 V
Rated test voltage	2.5 kV	2.5 kV	2.5 kV
Insulating material class	CTI 600		
Rated wiring solid wire	0.08 - 1.5 mm²		
Rated wiring stranded wire	0.08 - 1.5 mm²		
Rated wiring solid wire	AWG 28 - 16		
Rated wiring stranded wire	AWG 28 - 16		
Clearance and creepage distances	2.7 mm		
Protection category according to IEC 60529	IP 20		
Min. insul. strip length	7 mm		
Color	black		

Dimensional drawing

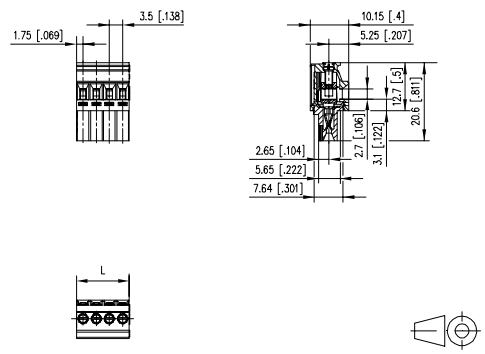

L = (Pole size - 1) * centerline + 3.5 mm (0.138 in.)

P/N
315141 ☐

Complete the part number by adding the pole size.

	02	03	04	05	06	07	08
09	10	11	12	13	14	15	16
17	18	19	20	21	22	23	24

(Information: page 67)

Standard pole sizes

Product family | Pole size | Color | Option

RW043xxHBLD *(Type 513)

Centerline | Design | Function | *old product name

- screw type terminal block, pluggable
- centerline 3.50 mm, direction of connection 90°
- lift system, fittable without loss of poles
- color black
- with alternative face, wire entry codeable side perpendicular to plug direction

Technical data

cULus V / A / AWG	300 / 10 / 28 - 16		
SEV 10 A / 130 V / 2.5 kV / 3 / 0.08 - 1 mm² / IEC 61984			
Overvoltage category	III	III	II
Pollution degree	3	2	2
Rated voltage	200 V	500 V	500 V
Rated test voltage	2.5 kV	2.5 kV	2.5 kV
Insulating material class	CTI 600		
Rated wiring solid wire	0.08 - 1.5 mm²		
Rated wiring stranded wire	0.08 - 1.5 mm²		
Rated wiring solid wire	AWG 28 - 16		
Rated wiring stranded wire	AWG 28 - 16		
Clearance and creepage distances	2.7 mm		
Protection category according to IEC 60529	IP 20		
Min. insul. strip length	7 mm		
Color	black		

Dimensional drawing

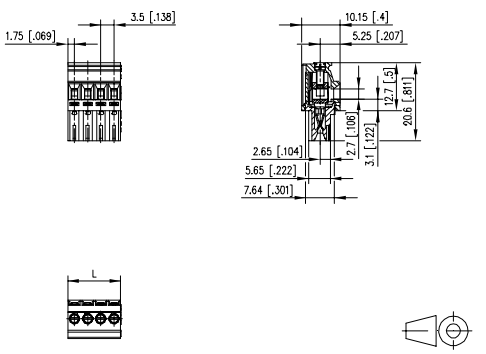

L = (Pole size - 1) * centerline + 3.5 mm (0.138 in.)

P/N
315131 ☐

Complete the part number by adding the pole size.

	02	03	04	05	06	07	08
09	10	11	12	13	14	15	16
17	18	19	20	21	22	23	24

(Information: page 67)

Standard pole sizes

Pin Headers

for **RW043xxHBLF** — **Page**

PW063xxHBBF (Type 525) 148

PW063xxVBBF (Type 526) 153

Pin Headers

for **RW043xxHBLS** — **Page**

PW063xxHBBF (Type 525) 148

PW063xxVBBF (Type 526) 153

Product family | Pole size | Color | Option

RW043xxHBLF *(Type 534)

Centerline | Design | Function | *old product name

- screw type terminal block, pluggable
- centerline 3.50 mm, direction of connection 90°
- lift system
- color black, mounting flange
- with alternative face, wire entry uncodeable side perpendicular to plug direction

Technical data

cULus V / A / AWG	300 / 10 / 28 - 16		
SEV	10 A / 130 V / 2.5 kV / 3 / 0.08 - 1 mm² / IEC 61984		
Overvoltage category	III	III	II
Pollution degree	3	2	2
Rated voltage	200 V	500 V	500 V
Rated test voltage	2.5 kV	2.5 kV	2.5 kV
Insulating material class	CTI 600		
Rated wiring solid wire	0.08 - 1.5 mm²		
Rated wiring stranded wire	0.08 - 1.5 mm²		
Rated wiring solid wire	AWG 28 - 16		
Rated wiring stranded wire	AWG 28 - 16		
Clearance and creepage distances	2.7 mm		
Protection category according to IEC 60529	IP 20		
Min. insul. strip length	7 mm		
Color	black		

Dimensional drawing

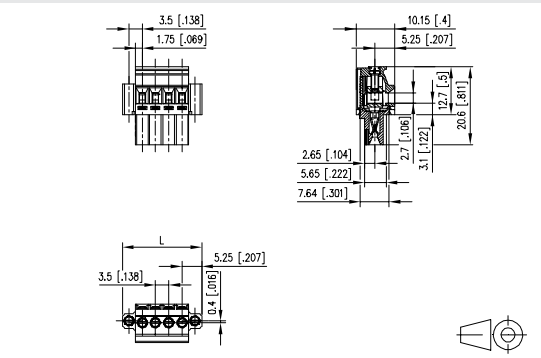

L = (Pole size - 1) * centerline + 10.5 mm (0.413 in.)

P/N

315341 ☐

Complete the part number by adding the pole size.

	02	03	04	05	06	07	08
09	10	11	12	13	14	15	16
17	18	19	20	21	22	23	24

(Information: page 67)

Standard pole sizes

Product family | Pole size | Color | Option

RW043xxHBLS *(Type 533)

Centerline | Design | Function | *old product name

- screw type terminal block, pluggable
- centerline 3.50 mm, direction of connection 90°
- lift system
- color black, mounting flange
- with alternative face, wire entry codeable side perpendicular to plug direction

Technical data

cULus V / A / AWG	300 / 10 / 28 - 16		
SEV	10 A / 130 V / 2.5 kV / 3 / 0.08 - 1 mm² / IEC 61984		
Overvoltage category	III	III	II
Pollution degree	3	2	2
Rated voltage	200 V	500 V	500 V
Rated test voltage	2.5 kV	2.5 kV	2.5 kV
Insulating material class	CTI 600		
Rated wiring solid wire	0.08 - 1.5 mm²		
Rated wiring stranded wire	0.08 - 1.5 mm²		
Rated wiring solid wire	AWG 28 - 16		
Rated wiring stranded wire	AWG 28 - 16		
Clearance and creepage distances	2.7 mm		
Protection category according to IEC 60529	IP 20		
Min. insul. strip length	7 mm		
Color	black		

Dimensional drawing

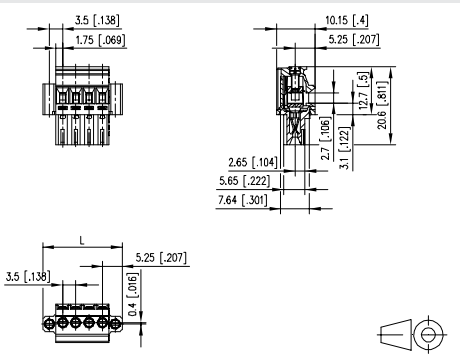

L = (Pole size - 1) * centerline + 10.5 mm (0.413 in.)

P/N

315331 ☐

Complete the part number by adding the pole size.

	02	03	04	05	06	07	08
09	10	11	12	13	14	15	16
17	18	19	20	21	22	23	24

(Information: page 67)

Standard pole sizes

Pin Headers

for RP013xxVBWN	Page
PT113xxHBBN (Type 182)	150
PT113xxVBBN (Type 183)	154

Accessories

for RP013xxVBWN	Page
720243	296
720243	297

Pin Headers

for RP033xxVBLC	Page
PR043xxHBBN (Type 188)	146
PT093xxHBBN (Type 342)	149
PR043xxVBBN (Type 189)	151
PT093xxVBBN (Type 343)	154

Product family	Pole size	Color	Option
RP01	3	xx	V	B	W	N	*(Type 169)
Centerline	Design	Function	*old product name

- screw type terminal block, pluggable
- centerline 3.50 mm, direction of connection vertical 0°
- wire protector
- color black
- wire entry codeable side perpendicular to plug direction

Technical data

cULus V / A / AWG	250 / 10 / 28 - 16		
5 A / 125 V / 2.5 kV / 3 / 0.08 - 1 mm² / IEC 61984			
Overvoltage category	III	III	II
Pollution degree	3	2	2
Rated voltage	160 V	400 V	400 V
Rated test voltage	2.5 kV	2.5 kV	2.5 kV
Insulating material class	CTI 600		
Rated wiring solid wire	0.08 - 1.5 mm²		
Rated wiring stranded wire	0.08 - 1 mm²		
Rated wiring solid wire	AWG 28 - 16		
Rated wiring stranded wire	AWG 28 - 16		
Clearance and creepage distances	2 mm		
Protection category according to IEC 60529	IP 20		
Min. insul. strip length	5 mm		
Color	black		

Dimensional drawing

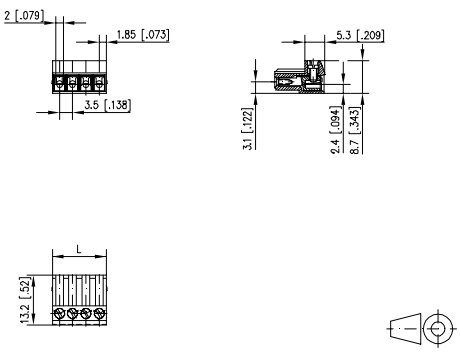

L = (Pole size - 1) * centerline + 3.7 mm (0.146 in.)

P/N
311691 ☐

Complete the part number by adding the pole size.

	02	03	04	05	06	07	08
09	10	11	12	13	14	15	16
17	18						

(Information: page 67)

Standard pole sizes

Product family	Pole size	Color	Option
RP03	3	xx	V	B	L	C	*(Type 339)
Centerline	Design	Function	*old product name

- screw type terminal block, pluggable
- centerline 3.50 mm, direction of connection vertical 0°
- lift system, fittable without loss of poles
- color black
- wire entry codeable side perpendicular to plug direction

Technical data

cULus V / A / AWG	300 / 8 / 28 - 16		
SEV 9 A / 125 V / 2.5 kV / 3 / 0.08 - 1.5 mm² / IEC 61984			
Overvoltage category	III	III	II
Pollution degree	3	2	2
Rated voltage	160 V	400 V	400 V
Rated test voltage	2.5 kV	2.5 kV	2.5 kV
Insulating material class	CTI 600		
Rated wiring solid wire	0.08 - 1.5 mm²		
Rated wiring stranded wire	0.08 - 1.5 mm²		
Rated wiring solid wire	AWG 28 - 16		
Rated wiring stranded wire	AWG 28 - 16		
Clearance and creepage distances	2.2 mm		
Protection category according to IEC 60529	IP 20		
Min. insul. strip length	6 mm		
Color	black		

Dimensional drawing

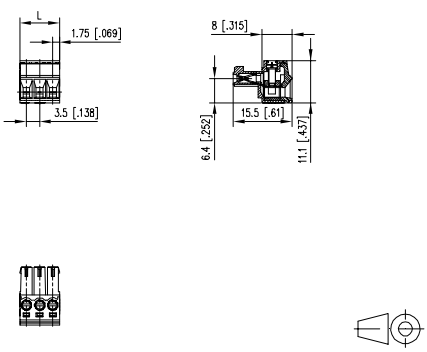

L = (Pole size - 1) * centerline + 3.5 mm (0.138 in.)

P/N
313391 ☐

Complete the part number by adding the pole size.

	02	03	04	05	06	07	08
09	10	11	12				

(Information: page 67)

Standard pole sizes

Pin Headers

Pin Headers

Product family | Pole size | Color | Option

RP034xxHBLN *(Type 114)

Centerline | Design | Function | *old product name

- screw type terminal block, pluggable
- centerline 3.81 mm, direction of connection 90°
- lift system
- color black
- wire entry uncodeable side perpendicular to plug direction

Technical data

cULus V / A / AWG 300 / 11 / 28 - 16

SEV 9 A / 160 V / 2.5 kV / 3 / 0.08 - 1.5 mm² / IEC 61984

Overvoltage category	III	III	II
Pollution degree	3	2	2
Rated voltage	200 V	500 V	500 V
Rated test voltage	2.5 kV	2.5 kV	2.5 kV
Insulating material class	CTI 600		
Rated wiring solid wire	0.08 - 2.0 mm²		
Rated wiring stranded wire	0.08 - 1.5 mm²		
Rated wiring solid wire	AWG 28 - 14		
Rated wiring stranded wire	AWG 28 - 16		
Clearance and creepage distances	2.9 mm		
Protection category according to IEC 60529	IP 20		
Min. insul. strip length	7 mm		
Color	black		

Dimensional drawing

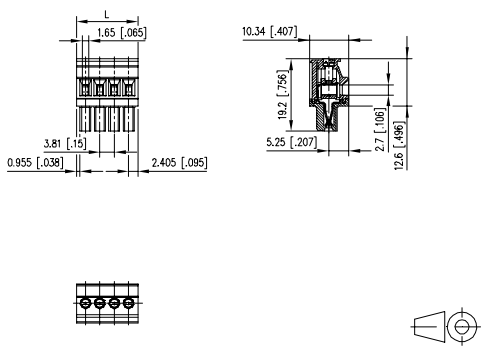

L = (Pole size - 1) * centerline + 4.81 mm (0.189 in.)

P/N

311141 ☐

Complete the part number by adding the pole size.

	02	03	04	05	06	07	08
09	10	11	12	13	14	15	16
17	18	19	20	21			

(Information: page 67)

Standard pole sizes

Product family | Pole size | Color | Option

RP034xxHBLO *(Type 113)

Centerline | Design | Function | *old product name

- screw type terminal block, pluggable
- centerline 3.81 mm, direction of connection 90°
- lift system
- color black
- wire entry codeable side perpendicular to plug direction

Technical data

cULus V / A / AWG 300 / 11 / 28 - 16

SEV 9 A / 160 V / 2.5 kV / 3 / 0.08 - 1.5 mm² / IEC 61984

Overvoltage category	III	III	II
Pollution degree	3	2	2
Rated voltage	200 V	500 V	500 V
Rated test voltage	2.5 kV	2.5 kV	2.5 kV
Insulating material class	CTI 600		
Rated wiring solid wire	0.08 - 2.0 mm²		
Rated wiring stranded wire	0.08 - 1.5 mm²		
Rated wiring solid wire	AWG 28 - 14		
Rated wiring stranded wire	AWG 28 - 16		
Clearance and creepage distances	2.9 mm		
Protection category according to IEC 60529	IP 20		
Min. insul. strip length	7 mm		
Color	black		

Dimensional drawing

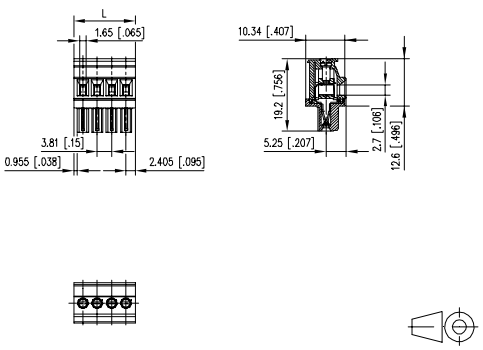

L = (Pole size - 1) * centerline + 4.81 mm (0.189 in.)

P/N

311131 ☐

Complete the part number by adding the pole size.

	02	03	04	05	06	07	08
09	10	11	12	13	14	15	16
17	18	19	20	21			

(Information: page 67)

Standard pole sizes

Pin Headers

for **RP034xxVBLN** — Page

Pin Headers

for **RP034xxVBLF** — Page

Product family | Pole size | Color | Option

RP034xxVBLN *(Type 369)

Centerline | Design | Function | *old product name

- screw type terminal block, pluggable
- centerline 3.81 mm, direction of connection vertical 0°
- lift system
- color black
- wire entry uncodeable side perpendicular to plug direction

Technical data

V / A / AWG	300 / 8 / 28 - 16		
9 A / 160 V / 2.5 kV / 3 / 0.08 - 1.5 mm² / IEC 61984			
Overvoltage category	III	III	II
Pollution degree	3	2	2
Rated voltage	250 V	630 V	630 V
Rated test voltage	4.0 kV	4.0 kV	4 kV
Insulating material class	CTI 600		
Rated wiring solid wire	0.08 - 1.5 mm²		
Rated wiring stranded wire	0.08 - 1.5 mm²		
Rated wiring solid wire	AWG 28 - 16		
Rated wiring stranded wire	AWG 22 - 16		
Clearance and creepage distances	3.5 mm		
Protection category according to IEC 60529	IP 20		
Min. insul. strip length	7 mm		
Color	black		

Dimensional drawing

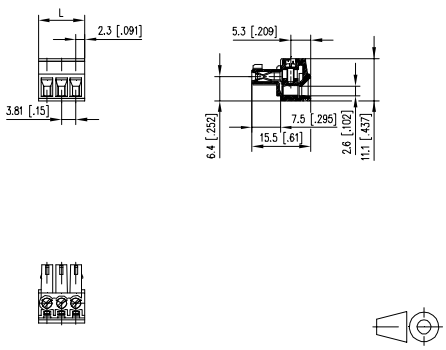

L = (Pole size - 1) * centerline + 4.6 mm (0.181 in.)

P/N
313691 ☐

Complete the part number by adding the pole size.

	02	03	04	05	06	07	08
09	10	11	12	13	14	15	16
17	18	19	20	21	22	23	24

(Information: page 67)

Standard pole sizes

Product family | Pole size | Color | Option

RP034xxVBLF *(Type 379)

Centerline | Design | Function | *old product name

- screw type terminal block, pluggable
- centerline 3.81 mm, direction of connection vertical 0°
- lift system
- color black, mounting flange
- wire entry uncodeable side perpendicular to plug direction

Technical data

V / A / AWG	300 / 8 / 28 - 16		
9 A / 160 V / 2.5 kV / 3 / 0.08 - 1.5 mm² / IEC 61984			
Overvoltage category	III	III	II
Pollution degree	3	2	2
Rated voltage	250 V	630 V	630 V
Rated test voltage	4.0 kV	4.0 kV	4 kV
Insulating material class	CTI 600		
Rated wiring solid wire	0.08 - 1.5 mm²		
Rated wiring stranded wire	0.08 - 1.5 mm²		
Rated wiring solid wire	AWG 28 - 16		
Rated wiring stranded wire	AWG 22 - 16		
Clearance and creepage distances	3.5 mm		
Protection category according to IEC 60529	IP 20		
Min. insul. strip length	7 mm		
Color	black		

Dimensional drawing

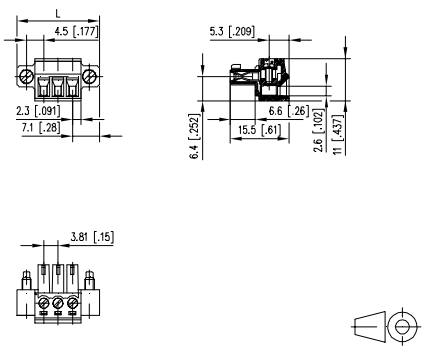

L = (Pole size - 1) * centerline + 14.2 mm (0.559 in.)

P/N
313791 ☐

Complete the part number by adding the pole size.

	02	03	04	05	06	07	08
09	10	11	12	13	14	15	16
17	18	19	20	21	22	23	24

(Information: page 67)

Standard pole sizes

Pin Headers

for **RP025xxIBWC**

Accessories

for **RP025xxIBWC**

Pin Headers

for **RP025xxIBWU**

Accessories

for **RP025xxIBWU**

Product family	Pole size	Color	Option
RP02	5xx	I	BWC
Centerline	Design	Function	

*(Type 007)

*old product name

- screw type terminal block, pluggable
- centerline 5.00 mm, direction of connection 90°
- wire protector, fittable without loss of poles
- color black
- wire entry perpendicular to plug direction, lamella

Technical data

V / A / AWG	300 / 15 / 22 - 12		
10 A / 250 V / 2.5 kV / 3 / 0.33 - 2.5 mm² / IEC 61984			
Overvoltage category	III	III	II
Pollution degree	3	2	2
Rated voltage	160 V	400 V	400 V
Rated test voltage	2.5 kV	2.5 kV	2.5 kV
Insulating material class	CTI 600		
Rated wiring solid wire	0.33 - 2.5 mm²		
Rated wiring stranded wire	0.33 - 2.5 mm²		
Rated wiring solid wire	AWG 22 - 12		
Rated wiring stranded wire	AWG 22 - 12		
Clearance and creepage distances	2.3 mm		
Protection category according to IEC 60529	IP 20		
Min. insul. strip length	6 mm		
Color	black		

Dimensional drawing

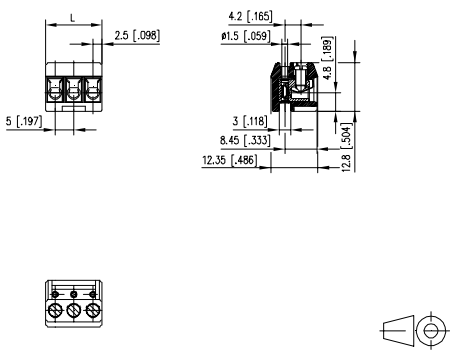

L = (Pole size - 1) * centerline + 5 mm (0.197 in.)

P/N

310071 ☐

Complete the part number by adding the pole size.

	02	03	04	05	06	07	08
09	10	11	12	13	14	15	16
17	18	19	20	21	22	23	24

(Information: page 67)

Standard pole sizes

Product family	Pole size	Color	Option
RP02	5xx	I	BWU
Centerline	Design	Function	

*(Type 077)

*old product name

- screw type terminal block, pluggable
- centerline 5.00 mm, direction of connection 90°
- wire protector, modular
- color black
- wire entry perpendicular to plug direction, lamella

Technical data

V / A / AWG	300 / 15 / 22 - 14		
10 A / 250 V / 2.5 kV / 3 / 0.33 - 2.5 mm² / IEC 61984			
Overvoltage category	III	III	II
Pollution degree	3	2	2
Rated voltage	160 V	400 V	400 V
Rated test voltage	2.5 kV	2.5 kV	2.5 kV
Insulating material class	CTI 600		
Rated wiring solid wire	0.33 - 2.0 mm²		
Rated wiring stranded wire	0.33 - 2.0 mm²		
Rated wiring solid wire	AWG 22 - 14		
Rated wiring stranded wire	AWG 22 - 14		
Clearance and creepage distances	2.3 mm		
Protection category according to IEC 60529	IP 00		
Min. insul. strip length	6 mm		
Color	black		

Dimensional drawing

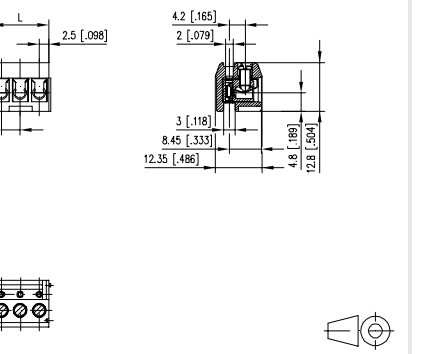

L = (Pole size - 1) * centerline + 5 mm (0.197 in.)

P/N

310771 ☐

Complete the part number by adding the pole size.

	02	03					

(Information: page 67)

Standard pole sizes

Pin Headers

for RP025xxHBWC	Page
PT055xxHBHC (Type 039)	163
PR015xxVBHC (Type 017)	166
PR015xxVBVC (Type 027)	166
PM035xxVBHC (Type 417)	170
PT065xxVBEN (Type 041)	172
PT065xxVBVN (Type 042)	172

Accessories

for RP025xxHBWC	Page
710084	285
710085	285
710121	290
710122	290
716846	293

Accessories

for RP025xxMBWC	Page
710084	285
710085	285
710121	290
710122	290
716846	293

Product family | Pole size | Color | Option

RP025xxHBWC *(Type 107)

Centerline | Design | Function | *old product name

- screw type terminal block, pluggable
- centerline 5.00 mm, direction of connection 90°
- wire protector, fittable without loss of poles
- color black
- Wire entry perpendicular to plug direction

Technical data

c UL us V / A / AWG	300 / 10 / 28 - 12		
SEV 10 A / 250 V / 2.5 kV / 3 / 0.33 - 2.5 mm² / IEC 61984			
Overvoltage category	III	III	II
Pollution degree	3	2	2
Rated voltage	160 V	400 V	400 V
Rated test voltage	2.5 kV	2.5 kV	2.5 kV
Insulating material class	CTI 600		
Rated wiring solid wire	0.08 - 2.5 mm²		
Rated wiring stranded wire	0.08 - 2.5 mm²		
Rated wiring solid wire	AWG 28 - 12		
Rated wiring stranded wire	AWG 28 - 12		
Clearance and creepage distances	2.3 mm		
Protection category according to IEC 60529	IP 00		
Min. insul. strip length	6 mm		
Color	black		

Dimensional drawing

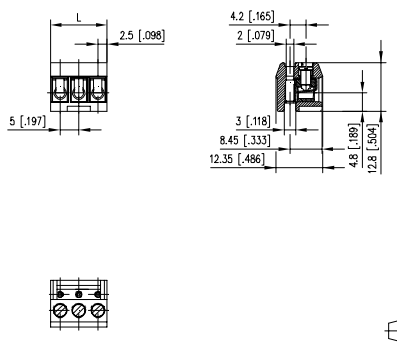

L = (Pole size - 1) * centerline + 5 mm (0.197 in.)

P/N
311071 ☐

Complete the part number by adding the pole size.

	02	03	04	05	06	07	08
09	10	11	12	13	14	15	16
17	18	19	20	21	22	23	24

(Information: page 67)

Standard pole sizes

Product family | Pole size | Color | Option

RP025xxMBWC *(Type 108)

Centerline | Design | Function | *old product name

- screw type terminal block, pluggable
- centerline 5.00 mm, direction of connection 90°
- wire protector, fittable without loss of poles
- color black
- wire entry perpendicular to plug direction, factory inserted pins

Technical data

c UL us V / A / AWG	300 / 10 / 28 - 12		
SEV 10 A / 250 V / 2.5 kV / 3 / 0.33 - 2.5 mm² / IEC 61984			
Overvoltage category	III	III	II
Pollution degree	3	2	2
Rated voltage	160 V	400 V	400 V
Rated test voltage	2.5 kV	2.5 kV	2.5 kV
Insulating material class	CTI 600		
Rated wiring solid wire	0.08 - 2.5 mm²		
Rated wiring stranded wire	0.08 - 2.5 mm²		
Rated wiring solid wire	AWG 28 - 12		
Rated wiring stranded wire	AWG 28 - 12		
Clearance and creepage distances	2.3 mm		
Solder pin dimension	1.0 x 1.0 mm		
Recommended pc board hole dia.	ø 1.5 mm		
Solder pin length	4.3 mm		
Protection category according to IEC 60529	IP 00		
Min. insul. strip length	6 mm		
Color	black		

Dimensional drawing

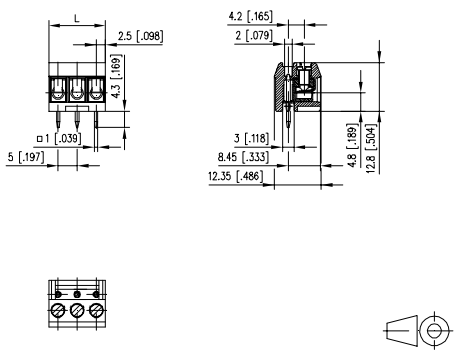

L = (Pole size - 1) * centerline + 5 mm (0.197 in.)

P/N
311081 ☐

Complete the part number by adding the pole size.

	02	03	04	05	06	07	08
09	10	11	12	13	14	15	16
17	18	19	20	21	22	23	24

(Information: page 67)

Standard pole sizes

Pin Headers

for **RP025xxHBLC** — **Page**

Accessories

for **RP025xxHBLC** — **Page**

Pin Headers

for **RP025xxIBLC** — **Page**

Accessories

for **RP025xxIBLC** — **Page**

Product family	Pole size	Color	Option
RP025	xx	H	B L C
Centerline		Design	Function

***(Type 207)** *old product name

- screw type terminal block, pluggable
- centerline 5.00 mm, direction of connection 90°
- lift system, fittable without loss of poles
- color black
- Wire entry perpendicular to plug direction

Technical data

V / A / AWG	300 / 15 / 28 - 12		
10 A / 250 V / 2.5 kV / 3 / 0.08 - 2.5 mm² / IEC 61984			
Overvoltage category	III	III	II
Pollution degree	3	2	2
Rated voltage	250 V	630 V	630 V
Rated test voltage	4.0 kV	4.0 kV	4 kV
Insulating material class	CTI 600		
Rated wiring solid wire	0.08 - 2.5 mm²		
Rated wiring stranded wire	0.08 - 2.5 mm²		
Rated wiring solid wire	AWG 28 - 12		
Rated wiring stranded wire	AWG 28 - 12		
Clearance and creepage distances	3.2 mm		
Protection category according to IEC 60529	IP 20		
Min. insul. strip length	6 mm		
Color	black		

Dimensional drawing

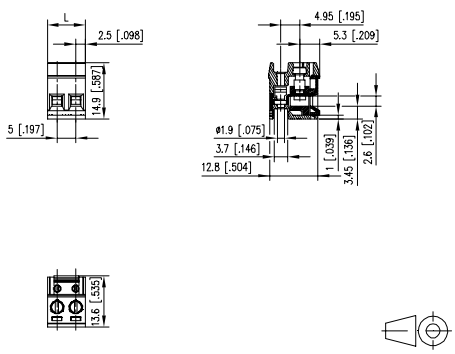

L = (Pole size - 1) * centerline + 5 mm (0.197 in.)

P/N

312071 ☐

Complete the part number by adding the pole size.

	02	03	04	05	06	07	08
09	10	11	12	13	14	15	16
17	18	19	20	21	22	23	24

(Information: page 67)

Standard pole sizes

Product family	Pole size	Color	Option
RP025	xx	I	B L C
Centerline		Design	Function

***(Type 137)** *old product name

- screw type terminal block, pluggable
- centerline 5.00 mm, direction of connection 90°
- lift system, fittable without loss of poles
- color black
- wire entry perpendicular to plug direction, lamella

Technical data

V / A / AWG	300 / 15 / 26 - 12		
10 A / 250 V / 2.5 kV / 3 / 0.12 - 2.5 mm² / IEC 61984			
Overvoltage category	III	III	II
Pollution degree	3	2	2
Rated voltage	250 V	630 V	630 V
Rated test voltage	4.0 kV	4.0 kV	4 kV
Insulating material class	CTI 600		
Rated wiring solid wire	0.13 - 2.5 mm²		
Rated wiring stranded wire	0.13 - 2.5 mm²		
Rated wiring solid wire	AWG 26 - 12		
Rated wiring stranded wire	AWG 26 - 12		
Clearance and creepage distances	3.2 mm		
Protection category according to IEC 60529	IP 20		
Min. insul. strip length	8 mm		
Color	black		

Dimensional drawing

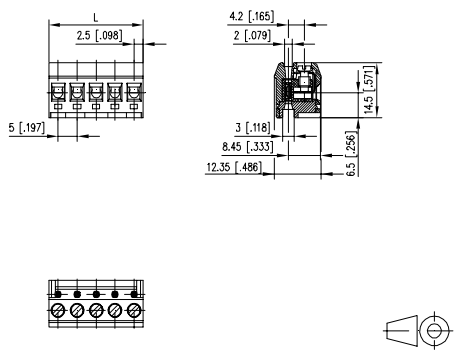

L = (Pole size - 1) * centerline + 5 mm (0.197 in.)

P/N

311371 ☐

Complete the part number by adding the pole size.

	02	03	04	05	06	07	08
09	10	11	12	13	14	15	16
17	18	19	20	21	22	23	24

(Information: page 67)

Standard pole sizes

Pin Headers

for RP095xxRBWC	Page
PM025xxVBHC (Type 318)	167
PR035xxVBHC (Type 046)	168

Pin Headers

for RP095xxBBWC	Page
PM025xxVBHC (Type 318)	167
PR035xxVBHC (Type 046)	168

Product family	Pole size	Color	Option
RP09	5xx	RBW	C
Centerline		Design	Function

*(Type 157 with snap-in technique)
*old product name

- screw type terminal block, pluggable
- centerline 5.00 mm, direction of connection 90°
- wire protector, fittable without loss of poles
- color black
- pluggable, top side pin insertion, snap-in technique for mounting into a housing

Technical data

V / A / AWG	300 / 5 / 28 - 20		
13.5 A / 250 V / 4 kV / 3 / 0.08 - 2.5 mm² / IEC 61984			
Overvoltage category	III	III	II
Pollution degree	3	2	2
Rated voltage	320 V	800 V	800 V
Rated test voltage	4 kV	4.0 kV	4 kV
Insulating material class	CTI 600		
Rated wiring solid wire	0.08 - 2.5 mm²		
Rated wiring stranded wire	0.08 - 2.5 mm²		
Rated wiring solid wire	AWG 28 - 16		
Rated wiring stranded wire	AWG 28 - 16		
Clearance and creepage distances	4.15 mm		
Protection category according to IEC 60529	IP 20		
Min. insul. strip length	6 mm		
Color	black		

Dimensional drawing

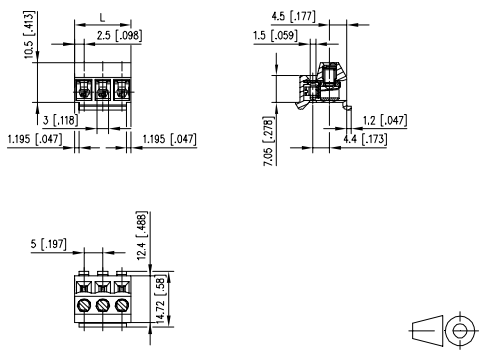

L = (Pole size - 1) * centerline + 5 mm (0.197 in.)

P/N
311571 ☐

Complete the part number by adding the pole size.

	02	03	04	05	06	07	08
09	10	11	12	13	14	15	16
17	18	19	20	21	22	23	24

(Information: page 67)

Standard pole sizes

Product family	Pole size	Color	Option
RP09	5xx	BBW	C
Centerline		Design	Function

*(Type 157 without ridge)
*old product name

- screw type terminal block, pluggable
- centerline 5.00 mm, direction of connection 90°
- wire protector, fittable without loss of poles
- color black
- flat bottom for minimal installation height

Technical data

V / A / AWG	300 / 5 / 28 - 20		
13.5 A / 250 V / 4 kV / 3 / 0.08 - 2.5 mm² / IEC 61984			
Overvoltage category	III	III	II
Pollution degree	3	2	2
Rated voltage	320 V	800 V	800 V
Rated test voltage	4 kV	4.0 kV	4 kV
Insulating material class	CTI 600		
Rated wiring solid wire	0.08 - 2.5 mm²		
Rated wiring stranded wire	0.08 - 2.5 mm²		
Rated wiring solid wire	AWG 28 - 16		
Rated wiring stranded wire	AWG 28 - 16		
Clearance and creepage distances	4.15 mm		
Protection category according to IEC 60529	IP 20		
Min. insul. strip length	6 mm		
Color	black		

Dimensional drawing

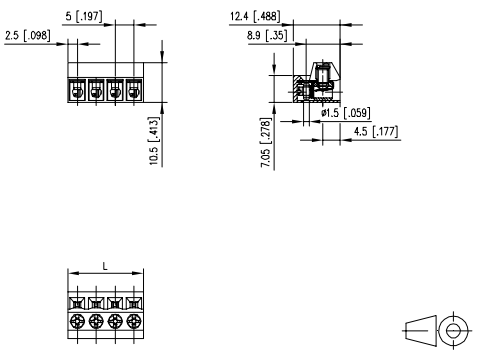

L = (Pole size - 1) * centerline + 5 mm (0.197 in.)

P/N
311571 ☐ -002730

Complete the part number by adding the pole size.

	02	03	04	05	06	07	08
09	10	11	12	13	14	15	16
17	18	19	20	21	22	23	24

(Information: page 67)

Standard pole sizes

Pin Headers

Pin Headers

Accessories

Product family	Pole size	Color	Option
RP09	5xx	H	B	W	C	*(Type 157 with ridge)
Centerline	Design	Function	*old product name

- screw type terminal block, pluggable
- centerline 5.00 mm, direction of connection 90°
- wire protector, fittable without loss of poles
- color black
- with ridge

Technical data

cULus V / A / AWG	300 / 5 / 28 - 20		
SEV	13.5 A / 250 V / 4 kV / 3 / 0.08 - 2.5 mm² / IEC 61984		
Overvoltage category	III	III	II
Pollution degree	3	2	2
Rated voltage	320 V	800 V	800 V
Rated test voltage	4 kV	4.0 kV	4 kV
Insulating material class	CTI 600		
Rated wiring solid wire	0.08 - 2.5 mm²		
Rated wiring stranded wire	0.08 - 2.5 mm²		
Rated wiring solid wire	AWG 28 - 16		
Rated wiring stranded wire	AWG 28 - 16		
Clearance and creepage distances	4.15 mm		
Protection category according to IEC 60529	IP 20		
Min. insul. strip length	6 mm		
Color	black		

Dimensional drawing

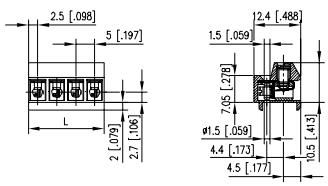

L = (Pole size - 1) * centerline + 5 mm (0.197 in.)

P/N

311571 ☐ -002740

Complete the part number by adding the pole size.

	02	03	04	05	06	07	08
09	10	11	12	13	14	15	16
17	18	19	20	21	22	23	24

(Information: page 67)

Standard pole sizes

Product family	Pole size	Color	Option
RP01	5xx	W	B	W	C	*(Type 009)
Centerline	Design	Function	*old product name

- screw type terminal block, pluggable
- centerline 5.00 mm, direction of connection vertical 0°
- wire protector, fittable without loss of poles
- color black
- wire entry uncodeable side parallel to plug direction, lamella

Technical data

cULus V / A / AWG	300 / 15 / 22 - 12		
SEV	13.5 A / 150 V / 2.5 kV / 3 / 0.08 - 2.5 mm² / IEC 61984		
Overvoltage category	III	III	II
Pollution degree	3	2	2
Rated voltage	125 V	320 V	320 V
Rated test voltage	2.5 kV	2.5 kV	2.5 kV
Insulating material class	CTI 600		
Rated wiring solid wire	0.33 - 2.5 mm²		
Rated wiring stranded wire	0.33 - 2.5 mm²		
Rated wiring solid wire	AWG 22 - 12		
Rated wiring stranded wire	AWG 22 - 12		
Clearance and creepage distances	1.9 mm		
Protection category according to IEC 60529	IP 20		
Min. insul. strip length	6 mm		
Color	black		

Dimensional drawing

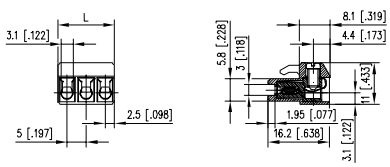

L = (Pole size - 1) * centerline + 5 mm (0.197 in.)

P/N

310091 ☐

Complete the part number by adding the pole size.

	02	03	04	05	06	07	08
09	10	11	12	13	14	15	16
17	18	19	20	21			

(Information: page 67)

Standard pole sizes

Pin Headers

for **RP015xxWBLC** — Page

Accessories

for **RP015xxWBLC** — Page

Pin Headers

for **RP015xxVBLC** — Page

Accessories

for **RP015xxVBLC** — Page

Product family	Pole size	Color	Option
RP015	xx	W	B L C
Centerline		Design	Function

***(Type 049)** *old product name

- screw type terminal block, pluggable
- centerline 5.00 mm, direction of connection vertical 0°
- lift system, fittable without loss of poles
- color black
- wire entry uncodeable side parallel to plug direction, lamella

Technical data

cULus V / A / AWG	300 / 15 / 22 - 12		
SEV 13.5 A / 320 V / 4 kV / 3 / 0.08 - 2.5 mm² / IEC 61984			
Overvoltage category	III	III	II
Pollution degree	3	2	2
Rated voltage	320 V	800 V	800 V
Rated test voltage	4 kV	4.0 kV	4 kV
Insulating material class	CTI 600		
Rated wiring solid wire	0.33 - 2.5 mm²		
Rated wiring stranded wire	0.33 - 2.5 mm²		
Rated wiring solid wire	AWG 22 - 12		
Rated wiring stranded wire	AWG 22 - 12		
Clearance and creepage distances	4.7 mm		
Protection category according to IEC 60529	IP 20		
Min. insul. strip length	6 mm		
Color	black		

Dimensional drawing

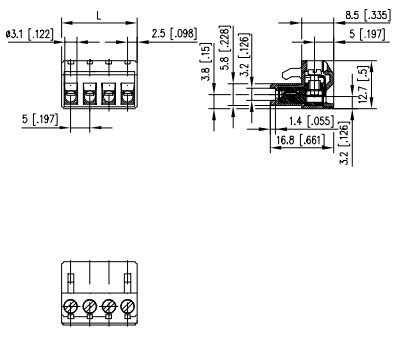

L = (Pole size - 1) * centerline + 5 mm (0.197 in.)

P/N
310491 ☐

Complete the part number by adding the pole size.

	02	03	04	05	06	07	08
09	10	11	12	13	14	15	16
17	18	19	20	21	22	23	24

(Information: page 67)

Standard pole sizes

Product family	Pole size	Color	Option
RP015	xx	V	B L C
Centerline		Design	Function

***(Type 349)** *old product name

- screw type terminal block, pluggable
- centerline 5.00 mm, direction of connection vertical 0°
- lift system, fittable without loss of poles
- color black
- wire entry codeable side perpendicular to plug direction

Technical data

cULus V / A / AWG	300 / 16 / 28 - 12		
SEV 13.5 A / 320 V / 4 kV / 3 / 0.08 - 2.5 mm² / IEC 61984			
Overvoltage category	III	III	II
Pollution degree	3	2	2
Rated voltage	250 V	630 V	630 V
Rated test voltage	4.0 kV	4.0 kV	4 kV
Insulating material class	CTI 600		
Rated wiring solid wire	0.08 - 2.5 mm²		
Rated wiring stranded wire	0.08 - 2.5 mm²		
Rated wiring solid wire	AWG 28 - 12		
Rated wiring stranded wire	AWG 28 - 12		
Clearance and creepage distances	3.6 mm		
Protection category according to IEC 60529	IP 20		
Min. insul. strip length	8 mm		
Color	black		

Dimensional drawing

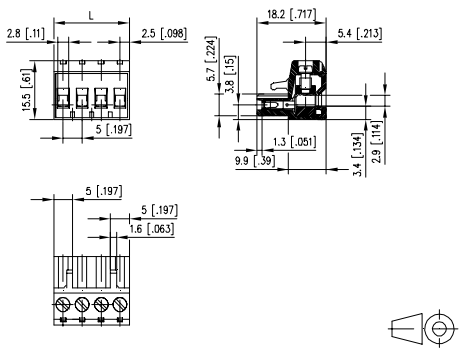

L = (Pole size - 1) * centerline + 5 mm (0.197 in.)

P/N
313491 ☐

Complete the part number by adding the pole size.

	02	03	04	05	06	07	08
09	10	11	12	13	14	15	16
17	18	19	20	21	22	23	24

(Information: page 67)

Standard pole sizes

Pin Headers

for **RP015xxSBLC** — Page

Accessories

for **RP015xxSBLC** — Page

Pin Headers

for **RP015xxVBLF** — Page

Accessories

for **RP015xxVBLF** — Page

Product family	Pole size	Color	Option
RP015	xx	S	B L C
Centerline	Design	Function	

***(Type 350)** *old product name

- screw type terminal block, pluggable
- centerline 5.00 mm, direction of connection vertical 0°
- lift system, fittable without loss of poles
- color black
- wire entry uncodeable side parallel to plug direction, draw-off accessory

Technical data

cULus V / A / AWG	300 / 16 / 28 - 12		
SEV 13.5 A / 320 V / 4 kV / 3 / 0.08 - 2.5 mm² / IEC 61984			
Overvoltage category	III	III	II
Pollution degree	3	2	2
Rated voltage	250 V	630 V	630 V
Rated test voltage	4.0 kV	4.0 kV	4 kV
Insulating material class	CTI 600		
Rated wiring solid wire	0.08 - 2.5 mm²		
Rated wiring stranded wire	0.08 - 2.5 mm²		
Rated wiring solid wire	AWG 28 - 12		
Rated wiring stranded wire	AWG 28 - 12		
Clearance and creepage distances	3.6 mm		
Protection category according to IEC 60529	IP 00		
Min. insul. strip length	8 mm		
Color	black		

Dimensional drawing

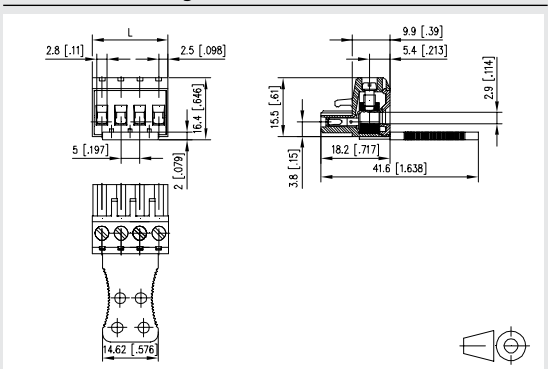

L = (Pole size - 1) * centerline + 5 mm (0.197 in.)

P/N **313501** ☐

Complete the part number by adding the pole size.

	03	04	05	06	07	08	09
10	11	12					

(Information: page 67)

Standard pole sizes

Product family	Pole size	Color	Option
RP015	xx	V	B L F
Centerline	Design	Function	

***(Type 351)** *old product name

- screw type terminal block, pluggable
- centerline 5.00 mm, direction of connection vertical 0°
- lift system
- color black, mounting flange
- wire entry codeable side perpendicular to plug direction

Technical data

cULus V / A / AWG	300 / 16 / 28 - 12		
SEV 13.5 A / 320 V / 4 kV / 3 / 0.08 - 2.5 mm² / IEC 61984			
Overvoltage category	III	III	II
Pollution degree	3	2	2
Rated voltage	250 V	630 V	630 V
Rated test voltage	4.0 kV	4.0 kV	4 kV
Insulating material class	CTI 600		
Rated wiring solid wire	0.08 - 2.5 mm²		
Rated wiring stranded wire	0.08 - 2.5 mm²		
Rated wiring solid wire	AWG 28 - 12		
Rated wiring stranded wire	AWG 28 - 12		
Clearance and creepage distances	3.6 mm		
Protection category according to IEC 60529	IP 20		
Min. insul. strip length	8 mm		
Color	black		

Dimensional drawing

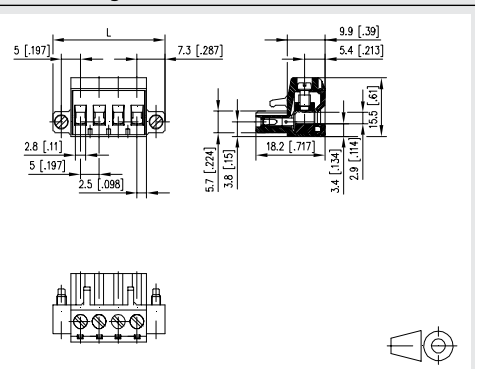

L = (Pole size - 1) * centerline + 14.6 mm (0.575 in.)

P/N **313511** ☐

Complete the part number by adding the pole size.

	02	03	04	05	06	07	08
09	10	11	12	13	14	15	16
17	18	19	20	21	22	23	24

(Information: page 67)

Standard pole sizes

Pin Headers

for RP085xxVBLC	Page
PR075xxHBEL (Type 337)	160
PR075xxHBER (Type 338)	161
PT045xxHBBN (Type 030)	162
PT045xxHBVC (Type 031)	162
PT045xxVBBN (Type 020)	171

Accessories

for RP085xxVBLC	Page
700025	298

Pin Headers

for RP035xxIBLN	Page
PT045xxHBEC (Type 029)	161
PT045xxHBBN (Type 030)	162
PT045xxHBVC (Type 031)	162
PT045xxVBEC (Type 019)	171
PT045xxVBBN (Type 020)	171

Product family	Pole size	Color	Option
RP085	xx	V B	L C
Centerline	Design	Function	

*(Type 348)
*old product name

- screw type terminal block, pluggable
- centerline 5.00 mm, direction of connection vertical 0°
- lift system, fittable without loss of poles
- color black

Technical data

V / A / AWG	300 / 17 / 24 - 12		
12 A / 250 V / 4 kV / 3 / 0.08 - 2.5 mm² / IEC 61984			
Overvoltage category	III	III	II
Pollution degree	3	2	2
Rated voltage	400 V	1000 V	1000 V
Rated test voltage	6.0 kV	6.0 kV	6 kV
Insulating material class	CTI 600		
Rated wiring solid wire	0.2 - 2.5 mm²		
Rated wiring stranded wire	0.2 - 2.5 mm²		
Rated wiring solid wire	AWG 24 - 12		
Rated wiring stranded wire	AWG 24 - 12		
Clearance and creepage distances	5.7 mm		
Protection category according to IEC 60529	IP 20		
Min. insul. strip length	8 mm		
Color	black		

Dimensional drawing

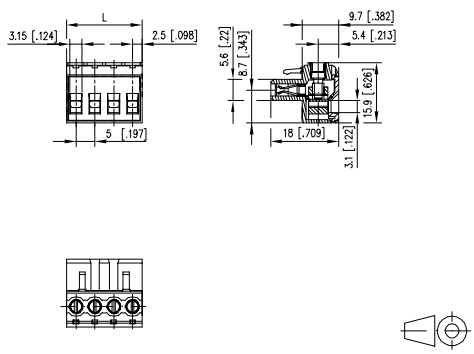

L = (Pole size - 1) * centerline + 5 mm (0.197 in.)

P/N
313481 ☐

Complete the part number by adding the pole size.

	02	03	04	05	06	07	08
09	10	11	12				

(Information: page 67)

■ Standard pole sizes

Product family	Pole size	Color	Option
RP035	xx	I B	L N
Centerline	Design	Function	

*(Type 013)
*old product name

- screw type terminal block, pluggable
- centerline 5.00 mm, direction of connection 90°
- lift system, fittable without loss of poles
- color black
- wire entry uncodeable side perpendicular to plug direction, lamella

Technical data

V / A / AWG	300 / 15 / 22 - 12		
13.5 A / 320 V / 4 kV / 3 / 0.08 - 2.5 mm² / IEC 61984			
Overvoltage category	III	III	II
Pollution degree	3	2	2
Rated voltage	250 V	630 V	630 V
Rated test voltage	4.0 kV	4.0 kV	4 kV
Insulating material class	CTI 600		
Rated wiring solid wire	0.33 - 2.5 mm²		
Rated wiring stranded wire	0.33 - 2.5 mm²		
Rated wiring solid wire	AWG 22 - 12		
Rated wiring stranded wire	AWG 22 - 12		
Clearance and creepage distances	3.4 mm		
Protection category according to IEC 60529	IP 20		
Min. insul. strip length	7 mm		
Color	black		

Dimensional drawing

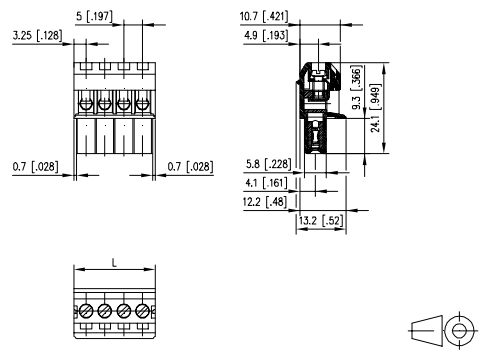

L = (Pole size - 1) * centerline + 6.5 mm (0.256 in.)

P/N
310131 ☐

Complete the part number by adding the pole size.

	02	03	04	05	06	07	08
09	10	11	12	13	14	15	16
17	18	19	20	21	22	23	24

(Information: page 67)

■ Standard pole sizes

Pin Headers

for **RP035xxHBLC** — Page

Accessories

for **RP035xxHBLC** — Page

Pin Headers

for **RP035xxHBLD** — Page

Accessories

for **RP035xxHBLD** — Page

Product family	Pole size	Color	Option
RP035	xx	H	B L C
Centerline		Design	Function

***(Type 313)** *old product name

- screw type terminal block, pluggable
- centerline 5.00 mm, direction of connection 90°
- lift system, fittable without loss of poles
- color black
- wire entry uncodeable side perpendicular to plug direction

Technical data

V / A / AWG	300 / 12 / 28 - 12		
13.5 A / 320 V / 4 kV / 3 / 0.08 - 2.5 mm² / IEC 61984			
Overvoltage category	III	III	II
Pollution degree	3	2	2
Rated voltage	250 V	630 V	630 V
Rated test voltage	4.0 kV	4.0 kV	4 kV
Insulating material class	CTI 600		
Rated wiring solid wire	0.08 - 2.5 mm²		
Rated wiring stranded wire	0.08 - 2.5 mm²		
Rated wiring solid wire	AWG 28 - 12		
Rated wiring stranded wire	AWG 28 - 12		
Clearance and creepage distances	3.2 mm		
Protection category according to IEC 60529	IP 20		
Min. insul. strip length	8 mm		
Color	black		

Dimensional drawing

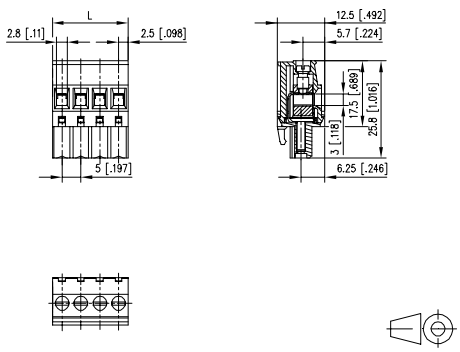

L = (Pole size - 1) * centerline + 5 mm (0.197 in.)

P/N **313131** ☐

Complete the part number by adding the pole size.

	02	03	04	05	06	07	08
09	10	11	12	13	14	15	16
17	18	19	20	21	22	23	24

(Information: page 67)

Standard pole sizes

Product family	Pole size	Color	Option
RP035	xx	H	B L D
Centerline		Design	Function

***(Type 314)** *old product name

- screw type terminal block, pluggable
- centerline 5.00 mm, direction of connection 90°
- lift system, fittable without loss of poles
- color black
- wire entry codeable side perpendicular to plug direction

Technical data

V / A / AWG	300 / 12 / 28 - 12		
13.5 A / 320 V / 4 kV / 3 / 0.08 - 2.5 mm² / IEC 61984			
Overvoltage category	III	III	II
Pollution degree	3	2	2
Rated voltage	250 V	630 V	630 V
Rated test voltage	4.0 kV	4.0 kV	4 kV
Insulating material class	CTI 600		
Rated wiring solid wire	0.08 - 2.5 mm²		
Rated wiring stranded wire	0.08 - 2.5 mm²		
Rated wiring solid wire	AWG 28 - 12		
Rated wiring stranded wire	AWG 28 - 12		
Clearance and creepage distances	3.2 mm		
Protection category according to IEC 60529	IP 20		
Min. insul. strip length	8 mm		
Color	black		

Dimensional drawing

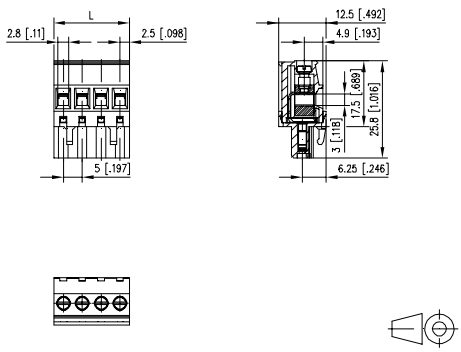

L = (Pole size - 1) * centerline + 5 mm (0.197 in.)

P/N **313141** ☐

Complete the part number by adding the pole size.

	02	03	04	05	06	07	08
09	10	11	12	13	14	15	16
17	18	19	20	21	22	23	24

(Information: page 67)

Standard pole sizes

Product family	Pole size	Color	Option
RP995	xx	VD	NN
Centerline		Design	Function

- screw type terminal block, pluggable
- centerline 5.00 mm, direction of connection vertical 0°
- lift system, fittable without loss of poles
- color gray

Technical data

V / A / AWG 300 / 6 / 24 - 12

Overvoltage category	III	III	II
Pollution degree	3	2	2
Rated voltage	250.0 V	630.0 V	630.0 V
Rated test voltage	4.0 kV	4.0 kV	4.0 kV
Insulating material class	CTI 600		
Rated wiring solid wire	0.2 - 2.5 mm²		
Rated wiring stranded wire	0.2 - 2.5 mm²		
Rated wiring solid wire	AWG 24 - 12		
Rated wiring stranded wire	AWG 24 - 12		
Clearance and creepage distances	3.2 mm		
Protection category according to IEC 60529	IP 20		
Min. insul. strip length	6.5 mm		
Color	gray		

Dimensional drawing

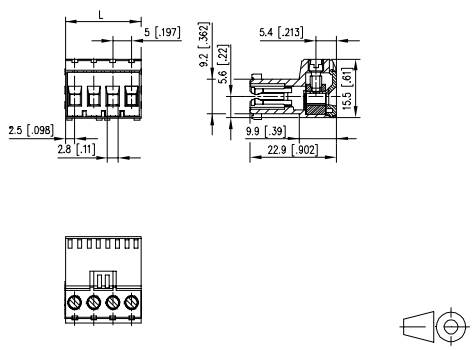

L = (Pole size - 1) * centerline + 5 mm (0.197 in.)

P/N

RP995 ☐ VDNN

Complete the part number by adding the pole size.

	02	03	04	05	06	07	08
09	10	11	12				

(Information: page 67)

■ **Standard pole sizes**

Pin Headers

for RP026xxIBWU	Page
PR016xxVBHC (Type 018)	179
PR016xxVBVC (Type 028)	180
PM016xxVBHC	180

Accessories

for RP026xxIBWU	Page
750150	286
750151	286
710121	290
710122	290
716846	293

Pin Headers

for RP016xxVBLC	Page
PR066xxHBEC (Type 478)	176
PR066xxHBBN (Type 178)	176
PT106xxHGDN (Type 292)	177
PT116xxHBEC (Type 229)	177
PT116xxHBBN (Type 230)	178
PR066xxVBEC (Type 479)	182
PR066xxVBBN (Type 179)	182
PT106xxVGDN (Type 290)	183
PT116xxVBEC (Type 219)	183
PT116xxVBBN (Type 220)	184

Accessories

for RP016xxVBLC	Page
700025	298

Product family	Pole size	Color	Option
RP02	6xx	I B	WU
Centerline	Design	Function	

*(Type 079) *old product name

- screw type terminal block, pluggable
- centerline 5.08 mm, direction of connection 90°
- wire protector, modular
- color black
- wire entry perpendicular to plug direction, lamella

Technical data

V / A / AWG	300 / 15 / 22 - 14		
10 A / 125 V / 2.5 kV / 3 / 0.33 - 2.5 mm² / IEC 61984			
Overvoltage category	III	III	II
Pollution degree	3	2	2
Rated voltage	160 V	400 V	400 V
Rated test voltage	2.5 kV	2.5 kV	2.5 kV
Insulating material class	CTI 600		
Rated wiring solid wire	0.33 - 2.0 mm²		
Rated wiring stranded wire	0.33 - 2.0 mm²		
Rated wiring solid wire	AWG 22 - 14		
Rated wiring stranded wire	AWG 22 - 14		
Clearance and creepage distances	2.3 mm		
Protection category according to IEC 60529	IP 00		
Min. insul. strip length	6 mm		
Color	black		

Dimensional drawing

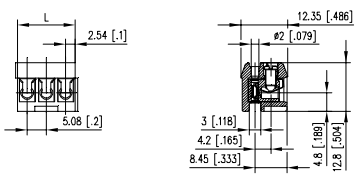

L = (Pole size - 1) * centerline + 5.08 mm (0.200 in.)

P/N

310791 ☐

Complete the part number by adding the pole size.

	02	03				

(Information: page 67)

Standard pole sizes

Product family	Pole size	Color	Option
RP01	6xx	V B	L C
Centerline	Design	Function	

*(Type 249) *old product name

- screw type terminal block, pluggable
- centerline 5.08 mm, direction of connection vertical 0°
- lift system, fittable without loss of poles
- color black
- wire entry codeable side perpendicular to plug direction

Technical data

V / A / AWG	300 / 16 / 28 - 12		
13.5 A / 320 V / 4 kV / 3 / 0.08 - 2.5 mm² / IEC 61984			
Overvoltage category	III	III	II
Pollution degree	3	2	2
Rated voltage	250 V	630 V	630 V
Rated test voltage	4.0 kV	4.0 kV	4 kV
Insulating material class	CTI 600		
Rated wiring solid wire	0.08 - 2.5 mm²		
Rated wiring stranded wire	0.08 - 2.5 mm²		
Rated wiring solid wire	AWG 28 - 12		
Rated wiring stranded wire	AWG 28 - 12		
Clearance and creepage distances	3.6 mm		
Protection category according to IEC 60529	IP 20		
Min. insul. strip length	8 mm		
Color	black		

Dimensional drawing

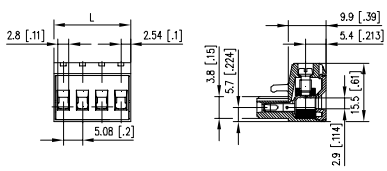

L = (Pole size - 1) * centerline + 5.08 mm (0.200 in.)

P/N

312491 ☐

Complete the part number by adding the pole size.

	02	03	04	05	06	07	08
09	10	11	12	13	14	15	16
17	18	19	20	21	22	23	24

(Information: page 67)

Standard pole sizes

Pin Headers

for **RP016xxSBLC** — Page

Accessories

for **RP016xxSBLC** — Page

Pin Headers

for **RP016xxVBLF** — Page

Accessories

for **RP016xxVBLF** — Page

Product family | Pole size | Color | Option

RP016xxSBLC *(Type 250)

Centerline | Design | Function | *old product name

- screw type terminal block, pluggable
- centerline 5.08 mm, direction of connection vertical 0°
- lift system, fittable without loss of poles
- color black
- wire entry uncodeable side parallel to plug direction, draw-off accessory

Technical data

cULus V / A / AWG	300 / 16 / 28 - 12		
SEV 13.5 A / 320 V / 4 kV / 3 / 0.08 - 2.5 mm² / IEC 61984			
Overvoltage category	III	III	II
Pollution degree	3	2	2
Rated voltage	250 V	630 V	630 V
Rated test voltage	4.0 kV	4.0 kV	4 kV
Insulating material class	CTI 600		
Rated wiring solid wire	0.08 - 2.5 mm²		
Rated wiring stranded wire	0.08 - 2.5 mm²		
Rated wiring solid wire	AWG 28 - 12		
Rated wiring stranded wire	AWG 28 - 12		
Clearance and creepage distances	3.6 mm		
Protection category according to IEC 60529	IP 00		
Min. insul. strip length	8 mm		
Color	black		

Dimensional drawing

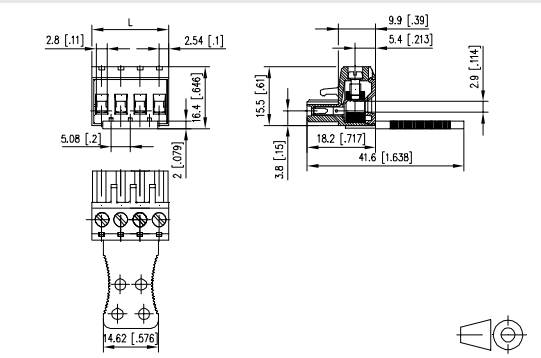

L = (Pole size - 1) * centerline + 5.08 mm (0.200 in.)

P/N **312501** ☐

Complete the part number by adding the pole size.

	03	04	05	06	07	08	09
10	11	12					

(Information: page 67)

Standard pole sizes

Product family | Pole size | Color | Option

RP016xxVBLF *(Type 251)

Centerline | Design | Function | *old product name

- screw type terminal block, pluggable
- centerline 5.08 mm, direction of connection vertical 0°
- lift system
- color black, mounting flange
- wire entry codeable side perpendicular to plug direction

Technical data

cULus V / A / AWG	300 / 16 / 28 - 12		
SEV 13.5 A / 320 V / 4 kV / 3 / 0.08 - 2.5 mm² / IEC 61984			
Overvoltage category	III	III	II
Pollution degree	3	2	2
Rated voltage	250 V	630 V	630 V
Rated test voltage	4.0 kV	4.0 kV	4 kV
Insulating material class	CTI 600		
Rated wiring solid wire	0.08 - 2.5 mm²		
Rated wiring stranded wire	0.08 - 2.5 mm²		
Rated wiring solid wire	AWG 28 - 12		
Rated wiring stranded wire	AWG 28 - 12		
Clearance and creepage distances	3.6 mm		
Protection category according to IEC 60529	IP 20		
Min. insul. strip length	8 mm		
Color	black		

Dimensional drawing

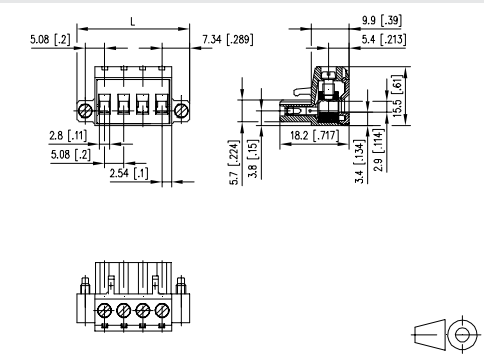

L = (Pole size - 1) * centerline + 14.68 mm (0.578 in.)

P/N **312511** ☐

Complete the part number by adding the pole size.

	02	03	04	05	06	07	08
09	10	11	12	13	14	15	16
17	18	19	20	21	22	23	24

(Information: page 67)

Standard pole sizes

Pin Headers

Accessories

Pin Headers

Accessories

Product family	Pole size	Color	Option	
RP03	6	xx	H	B L C *(Type 213)
Centerline		Design	Function	*old product name

- screw type terminal block, pluggable
- centerline 5.08 mm, direction of connection 90°
- lift system, fittable without loss of poles
- color black
- wire entry uncodeable side perpendicular to plug direction

Technical data

V / A / AWG	300 / 12 / 28 - 12		
13.5 A / 320 V / 4 kV / 3 / 0.08 - 2.5 mm² / IEC 61984			
Overvoltage category	III	III	II
Pollution degree	3	2	2
Rated voltage	250 V	630 V	630 V
Rated test voltage	4.0 kV	4.0 kV	4 kV
Insulating material class	CTI 600		
Rated wiring solid wire	0.08 - 4 mm²		
Rated wiring stranded wire	0.08 - 2.5 mm²		
Rated wiring solid wire	AWG 28 - 12		
Rated wiring stranded wire	AWG 28 - 12		
Clearance and creepage distances	3.2 mm		
Protection category according to IEC 60529	IP 20		
Min. insul. strip length	8 mm		
Color	black		

Dimensional drawing

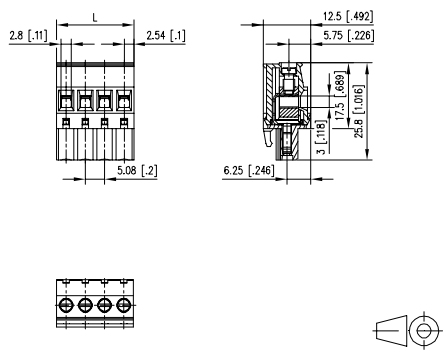

L = (Pole size - 1) * centerline + 5.08 mm (0.200 in.)

P/N

312131 ☐

Complete the part number by adding the pole size.

	02	03	04	05	06	07	08
09	10	11	12	13	14	15	16
17	18	19	20	21	22	23	24

(Information: page 67)

■ Standard pole sizes

Product family	Pole size	Color	Option	
RP03	6	xx	H	B L D *(Type 214)
Centerline		Design	Function	*old product name

- screw type terminal block, pluggable
- centerline 5.08 mm, direction of connection 90°
- lift system, fittable without loss of poles
- color black
- wire entry codeable side perpendicular to plug direction

Technical data

V / A / AWG	300 / 12 / 28 - 12		
13.5 A / 320 V / 4 kV / 3 / 0.08 - 2.5 mm² / IEC 61984			
Overvoltage category	III	III	II
Pollution degree	3	2	2
Rated voltage	250 V	630 V	630 V
Rated test voltage	4.0 kV	4.0 kV	4 kV
Insulating material class	CTI 600		
Rated wiring solid wire	0.08 - 4 mm²		
Rated wiring stranded wire	0.08 - 2.5 mm²		
Rated wiring solid wire	AWG 28 - 12		
Rated wiring stranded wire	AWG 28 - 12		
Clearance and creepage distances	3.2 mm		
Protection category according to IEC 60529	IP 20		
Min. insul. strip length	8 mm		
Color	black		

Dimensional drawing

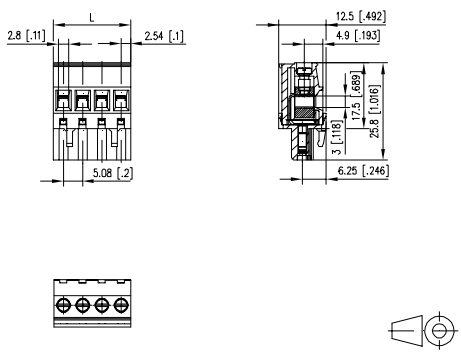

L = (Pole size - 1) * centerline + 5.08 mm (0.200 in.)

P/N

312141 ☐

Complete the part number by adding the pole size.

	02	03	04	05	06	07	08
09	10	11	12	13	14	15	16
17	18	19	20	21	22	23	24

(Information: page 67)

■ Standard pole sizes

Pin Headers

for **RP036xxHBLF** — Page

PT116xxHBBF (Type 236) 178
PT116xxVBBF (Type 235) 184

Accessories

for **RP036xxHBLF** — Page

700025 298

Pin Headers

for **RP036xxHBLS** — Page

PT116xxHBBF (Type 236) 178
PT116xxVBBF (Type 235) 184

Accessories

for **RP036xxHBLS** — Page

700025 298

Product family	Pole size	Color	Option
RP03	6xx	H B	L F
Centerline		Design	Function

RP036xxHBLF *(Type 217)

*old product name

- screw type terminal block, pluggable
- centerline 5.08 mm, direction of connection 90°
- lift system
- color black, mounting flange
- wire entry uncodeable side perpendicular to plug direction

Technical data

cULus V / A / AWG	300 / 12 / 28 - 12		
SEV	13.5 A / 320 V / 4 kV / 3 / 0.08 - 2.5 mm² / IEC 61984		
Overvoltage category	III	III	II
Pollution degree	3	2	2
Rated voltage	250 V	630 V	630 V
Rated test voltage	4.0 kV	4.0 kV	4 kV
Insulating material class	CTI 600		
Rated wiring solid wire	0.08 - 4 mm²		
Rated wiring stranded wire	0.08 - 2.5 mm²		
Rated wiring solid wire	AWG 28 - 12		
Rated wiring stranded wire	AWG 28 - 12		
Clearance and creepage distances	3.2 mm		
Protection category according to IEC 60529	IP 20		
Min. insul. strip length	8 mm		
Color	black		

Dimensional drawing

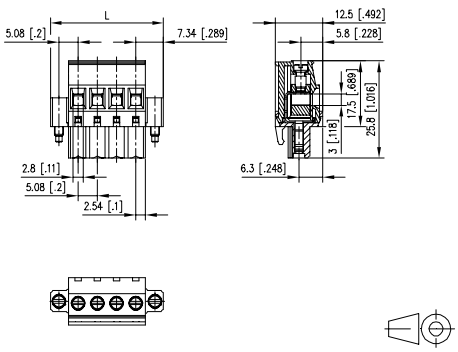

L = (Pole size - 1) * centerline + 14.68 mm (0.578 in.)

P/N
312171 ☐

Complete the part number by adding the pole size.

	02	03	04	05	06	07	08
09	10	11	12				

(Information: page 67)

Standard pole sizes

Product family	Pole size	Color	Option
RP03	6xx	H B	L S
Centerline		Design	Function

RP036xxHBLS *(Type 218)

*old product name

- screw type terminal block, pluggable
- centerline 5.08 mm, direction of connection 90°
- lift system
- color black, mounting flange
- wire entry codeable side perpendicular to plug direction

Technical data

cULus V / A / AWG	300 / 12 / 28 - 12		
SEV	13.5 A / 320 V / 4 kV / 3 / 0.08 - 2.5 mm² / IEC 61984		
Overvoltage category	III	III	II
Pollution degree	3	2	2
Rated voltage	250 V	630 V	630 V
Rated test voltage	4.0 kV	4.0 kV	4 kV
Insulating material class	CTI 600		
Rated wiring solid wire	0.08 - 4 mm²		
Rated wiring stranded wire	0.08 - 2.5 mm²		
Rated wiring solid wire	AWG 28 - 12		
Rated wiring stranded wire	AWG 28 - 12		
Clearance and creepage distances	3.2 mm		
Protection category according to IEC 60529	IP 20		
Min. insul. strip length	8 mm		
Color	black		

Dimensional drawing

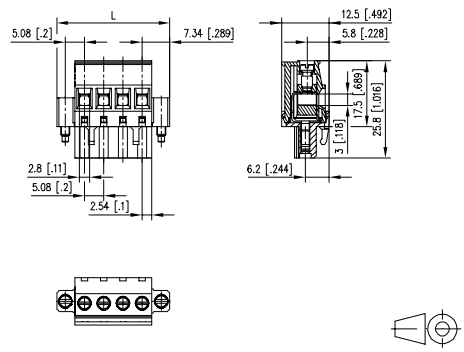

L = (Pole size - 1) * centerline + 14.68 mm (0.578 in.)

P/N
312181 ☐

Complete the part number by adding the pole size.

	02	03	04	05	06	07	08
09	10	11	12				

(Information: page 67)

Standard pole sizes

Pin Headers

Accessories

Product family	Pole size	Color	Option
RP018	xx	VB	LC
Centerline		Design	Function

*(Type 262)
*old product name

- screw type terminal block, pluggable
- centerline 7.62 mm, direction of connection vertical 0°
- lift system, fittable without loss of poles
- color black
- wire entry codeable side perpendicular to plug direction

Technical data

V / A / AWG 300 / 15 / 28 - 14

13.5 A / 500 V / 6 kV / 3 / 0.08 - 2.5 mm² / IEC 61984

Overvoltage category	III	III	II
Pollution degree	3	2	2
Rated voltage	400 V	1000 V	1000 V
Rated test voltage	6.0 kV	6.0 kV	6 kV
Insulating material class	CTI 600		
Rated wiring solid wire	0.08 - 2.0 mm²		
Rated wiring stranded wire	0.08 - 2.0 mm²		
Rated wiring solid wire	AWG 28 - 14		
Rated wiring stranded wire	AWG 28 - 14		
Clearance and creepage distances	6.1 mm		
Protection category according to IEC 60529	IP 20		
Min. insul. strip length	8 mm		
Color	black		

Dimensional drawing

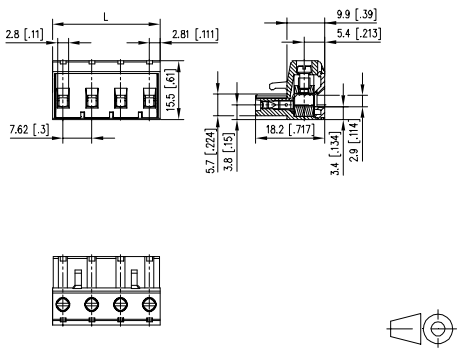

L = (Pole size - 1) * centerline + 5.62 mm (0.221 in.)

P/N
312621 ☐

Complete the part number by adding the pole size.

	02	03	04	05	06	07	08
09	10	11	12				

(Information: page 67)

■ Standard pole sizes

Pin Headers

for **RP029xxIBWC** — **Page**

PT069xxVBVN (Type 042) 189

Accessories

for **RP029xxIBWC** — **Page**

710084 285
710085 285
710121 290
710122 290
716846 293

Pin Headers

for **RP019xxWBLC** — **Page**

PT049xxHBBN (Type 030) 188
PT049xxVBBN (Type 020) 190

Accessories

for **RP019xxWBLC** — **Page**

716906 293

Product family | Pole size | Color | Option

RP029xxIBWC *(Type 007)

Centerline | Design | Function | *old product name

- screw type terminal block, pluggable
- centerline 10.00 mm, direction of connection 90°
- wire protector, fittable without loss of poles
- color black

Technical data

V / A / AWG 600 / 15 / 22 - 12

10 A / 630 V / 6 kV / 3 / 0.33 - 2.5 mm² / IEC 61984

Overvoltage category	III	III	II
Pollution degree	3	2	2
Rated voltage	500 V	1250 V	1250 V
Rated test voltage	6.0 kV	6.0 kV	6 kV
Insulating material class	CTI 600		
Rated wiring solid wire	0.33 - 2.5 mm²		
Rated wiring stranded wire	0.33 - 2.5 mm²		
Rated wiring solid wire	AWG 22 - 12		
Rated wiring stranded wire	AWG 22 - 12		
Clearance and creepage distances	7.3 mm		
Protection category according to IEC 60529	IP 20		
Min. insul. strip length	6 mm		
Color	black		

Dimensional drawing

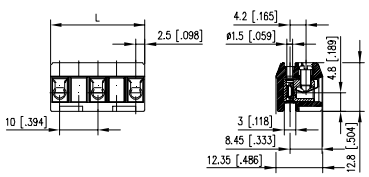

L = (Pole size - 1) * centerline + 5 mm (0.197 in.)

P/N **310072** ☐

Complete the part number by adding the pole size.

	02	03	04	05	06	07	08
09	10	11	12				

(Information: page 67)

Standard pole sizes

Product family | Pole size | Color | Option

RP019xxWBLC *(Type 049)

Centerline | Design | Function | *old product name

- screw type terminal block, pluggable
- centerline 10.00 mm, direction of connection vertical 0°
- lift system, fittable without loss of poles
- color black

Technical data

V / A / AWG 600 / 15 / 22 - 12

13.5 A / 630 V / 6 kV / 3 / 0.08 - 2.5 mm² / IEC 61984

Overvoltage category	III	III	II
Pollution degree	3	2	2
Rated voltage	630 V	1600 V	1600 V
Rated test voltage	8.0 kV	8 kV	8.0 kV
Insulating material class	CTI 600		
Rated wiring solid wire	0.33 - 2.5 mm²		
Rated wiring stranded wire	0.33 - 2.5 mm²		
Rated wiring solid wire	AWG 22 - 12		
Rated wiring stranded wire	AWG 22 - 12		
Clearance and creepage distances	9.07 mm		
Protection category according to IEC 60529	IP 20		
Min. insul. strip length	6 mm		
Color	black		

Dimensional drawing

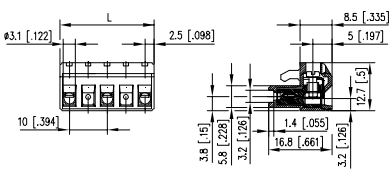

L = (Pole size - 1) * centerline + 5 mm (0.197 in.)

P/N **310492** ☐

Complete the part number by adding the pole size.

	02	03	04	05	06	07	08
09	10	11	12				

(Information: page 67)

Standard pole sizes

Pin Headers

for RP039xxHBLC	Page
PT119xxVBBN (Type 320)	190

Accessories

for RP039xxHBLC	Page
700025	298

Pin Headers

for RP019xxVBLC	Page
PT119xxVBBN (Type 320)	190

Accessories

for RP019xxVBLC	Page
700025	298

Product family | Pole size | Color | Option

RP039xxHBLC *(Type 313)

Centerline | Design | Function | *old product name

- screw type terminal block, pluggable
- centerline 10.00 mm, direction of connection 90°
- lift system, fittable without loss of poles
- color black

Technical data

cULus V / A / AWG	600 / 12 / 28 - 12		
SEV	13.5 A / 630 V / 6 kV / 3 / 0.08 - 2.5 mm² / IEC 61984		
Overvoltage category	III	III	II
Pollution degree	3	2	2
Rated voltage	630 V	1600 V	1600 V
Rated test voltage	8.0 kV	8 kV	8.0 kV
Insulating material class	CTI 600		
Rated wiring solid wire	0.08 - 4 mm²		
Rated wiring stranded wire	0.08 - 2.5 mm²		
Rated wiring solid wire	AWG 28 - 12		
Rated wiring stranded wire	AWG 28 - 12		
Clearance and creepage distances	8.2 mm		
Protection category according to IEC 60529	IP 20		
Min. insul. strip length	8 mm		
Color	black		

Dimensional drawing

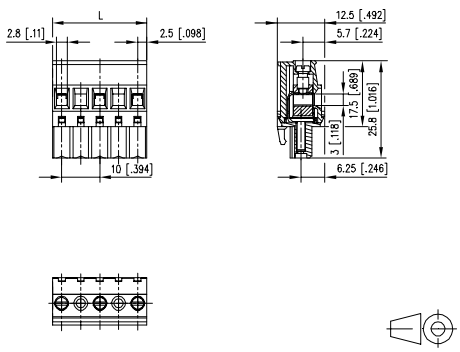

L = (Pole size - 1) * centerline + 5 mm (0.197 in.)

P/N

313132 ☐

Complete the part number by adding the pole size.

	02	03	04	05	06	07	08
09	10	11	12				

(Information: page 67)

Standard pole sizes

Product family | Pole size | Color | Option

RP019xxVBLC *(Type 349)

Centerline | Design | Function | *old product name

- screw type terminal block, pluggable
- centerline 10.00 mm, direction of connection vertical 0°
- lift system, fittable without loss of poles
- color black

Technical data

cULus V / A / AWG	600 / 16 / 28 - 12		
SEV	13.5 A / 630 V / 6 kV / 3 / 0.08 - 2.5 mm² / IEC 61984		
Overvoltage category	III	III	II
Pollution degree	3	2	2
Rated voltage	630 V	1600 V	1600 V
Rated test voltage	8.0 kV	8 kV	8.0 kV
Insulating material class	CTI 600		
Rated wiring solid wire	0.08 - 4 mm²		
Rated wiring stranded wire	0.08 - 2.5 mm²		
Rated wiring solid wire	AWG 28 - 12		
Rated wiring stranded wire	AWG 28 - 12		
Clearance and creepage distances	8.6 mm		
Protection category according to IEC 60529	IP 20		
Min. insul. strip length	8 mm		
Color	black		

Dimensional drawing

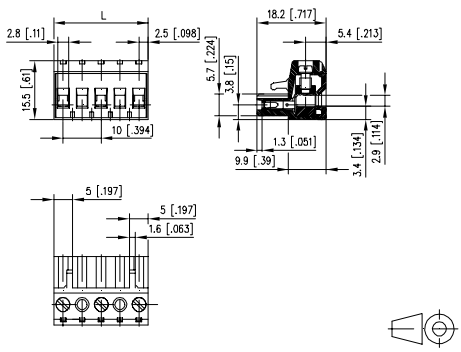

L = (Pole size - 1) * centerline + 5 mm (0.197 in.)

P/N

313492 ☐

Complete the part number by adding the pole size.

	02	03	04	05	06	07	08
09	10	11	12				

(Information: page 67)

Standard pole sizes

Pin Headers

Accessories

Product family	Pole size	Color	Option
RP019	xx	V B	L F
Centerline		Design	Function

***(Type 351)**

*old product name

- screw type terminal block, pluggable
- centerline 10.00 mm, direction of connection vertical 0°
- lift system
- color black, mounting flange

Technical data

c UL us V / A / AWG 600 / 16 / 28 - 12

SEV 13.5 A / 630 V / 6 kV / 3 / 0.08 - 2.5 mm² / IEC 61984

Overvoltage category	III	III	II
Pollution degree	3	2	2
Rated voltage	630 V	1600 V	1600 V
Rated test voltage	8.0 kV	8 kV	8.0 kV
Insulating material class	CTI 600		
Rated wiring solid wire	0.08 - 2.5 mm²		
Rated wiring stranded wire	0.08 - 2.5 mm²		
Rated wiring solid wire	AWG 28 - 12		
Rated wiring stranded wire	AWG 28 - 12		
Clearance and creepage distances	8.6 mm		
Protection category according to IEC 60529	IP 20		
Min. insul. strip length	8 mm		
Color	black		

Dimensional drawing

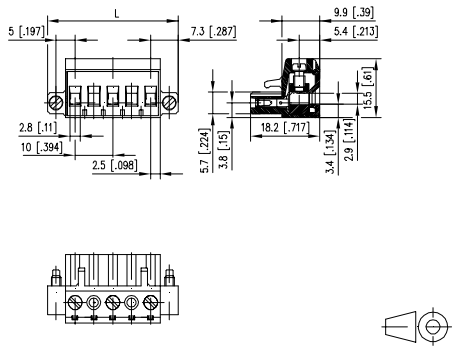

L = (Pole size - 1) * centerline + 14.6 mm (0.575 in.)

P/N

313512 ☐

Complete the part number by adding the pole size.

	02	03	04	05	06	07	08
09	10	11	12				

(Information: page 67)

■ Standard pole sizes

Pin Headers

Pin Headers

Accessories

Product family	Pole size	Color	Option	
RP01	Axx	V	B	L C *(Type 249)
Centerline		Design	Function	*old product name

- screw type terminal block, pluggable
- centerline 10.16 mm, direction of connection vertical 0°
- lift system, fittable without loss of poles
- color black

Technical data

cULus V / A / AWG	600 / 16 / 28 - 12		
SEV	13.5 A / 630 V / 6 kV / 3 / 0.08 - 2.5 mm² / IEC 61984		
Overvoltage category	III	III	II
Pollution degree	3	2	2
Rated voltage	630 V	1600 V	1600 V
Rated test voltage	8.0 kV	8 kV	8.0 kV
Insulating material class	CTI 600		
Rated wiring solid wire	0.08 - 4 mm²		
Rated wiring stranded wire	0.08 - 2.5 mm²		
Rated wiring solid wire	AWG 28 - 12		
Rated wiring stranded wire	AWG 28 - 12		
Clearance and creepage distances	8.68 mm		
Protection category according to IEC 60529	IP 20		
Min. insul. strip length	8 mm		
Color	black		

Dimensional drawing

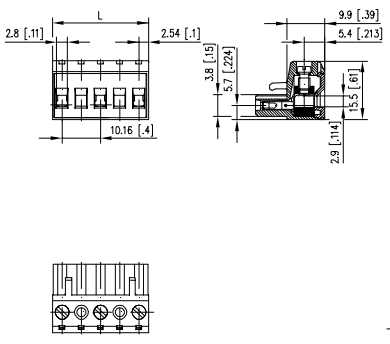

L = (Pole size - 1) * centerline + 5.08 mm (0.200 in.)

P/N

312492 ☐

Complete the part number by adding the pole size.

	02	03	04	05	06	07	08
09	10	11	12				

(Information: page 67)

Standard pole sizes

Product family	Pole size	Color	Option	
RP01	Axx	V	B	L F *(Type 251)
Centerline		Design	Function	*old product name

- screw type terminal block, pluggable
- centerline 10.16 mm, direction of connection vertical 0°
- lift system
- color black, mounting flange

Technical data

cULus V / A / AWG	600 / 16 / 28 - 12		
SEV	13.5 A / 630 V / 6 kV / 3 / 0.08 - 2.5 mm² / IEC 61984		
Overvoltage category	III	III	II
Pollution degree	3	2	2
Rated voltage	630 V	1600 V	1600 V
Rated test voltage	8.0 kV	8 kV	8.0 kV
Insulating material class	CTI 600		
Rated wiring solid wire	0.08 - 4 mm²		
Rated wiring stranded wire	0.08 - 2.5 mm²		
Rated wiring solid wire	AWG 28 - 12		
Rated wiring stranded wire	AWG 28 - 12		
Clearance and creepage distances	8.68 mm		
Protection category according to IEC 60529	IP 20		
Min. insul. strip length	8 mm		
Color	black		

Dimensional drawing

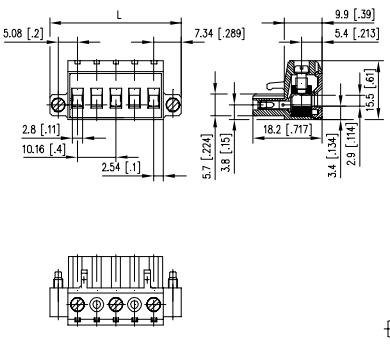

L = (Pole size - 1) * centerline + 14.68 mm (0.578 in.)

P/N

312512 ☐

Complete the part number by adding the pole size.

	02	03	04	05	06	07	08
09	10	11	12				

(Information: page 67)

Standard pole sizes

Pin Headers

for **RP03AxxHBLC** — Page

Accessories

Page

for **RP03AxxHBLC**

Pin Headers

for **RP03AxxHBLD** — Page

Accessories

Page

for **RP03AxxHBLD**

Product family	Pole size	Color	Option
RP03	Axx	H	B L C
Centerline	Design	Function	

RP03AxxHBLC *(Type 213)

*old product name

- screw type terminal block, pluggable
- centerline 10.16 mm, direction of connection 90°
- lift system, fittable without loss of poles
- color black

Technical data

cULus V / A / AWG	600 / 12 / 28 - 12		
SEV	13.5 A / 630 V / 6 kV / 3 / 0.08 - 2.5 mm² / IEC 61984		
Overvoltage category	III	III	II
Pollution degree	3	2	2
Rated voltage	630 V	1600 V	1600 V
Rated test voltage	8.0 kV	8 kV	8.0 kV
Insulating material class	CTI 600		
Rated wiring solid wire	0.08 - 4 mm²		
Rated wiring stranded wire	0.08 - 2.5 mm²		
Rated wiring solid wire	AWG 28 - 12		
Rated wiring stranded wire	AWG 28 - 12		
Clearance and creepage distances	8.28 mm		
Protection category according to IEC 60529	IP 20		
Min. insul. strip length	8 mm		
Color	black		

Dimensional drawing

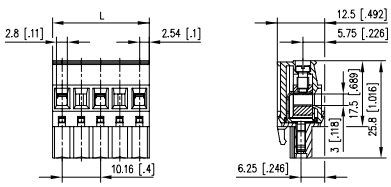

L = (Pole size - 1) * centerline + 5.08 mm (0.200 in.)

P/N

312132 ☐

Complete the part number by adding the pole size.

	02	03	04	05	06	07	08
09	10	11	12				

(Information: page 67)

Standard pole sizes

Product family	Pole size	Color	Option
RP03	Axx	H	B L D
Centerline	Design	Function	

RP03AxxHBLD *(Type 214)

*old product name

- screw type terminal block, pluggable
- centerline 10.16 mm, direction of connection 90°
- lift system, fittable without loss of poles
- color black

Technical data

cULus V / A / AWG	600 / 12 / 28 - 12		
SEV	13.5 A / 630 V / 6 kV / 3 / 0.08 - 2.5 mm² / IEC 61984		
Overvoltage category	III	III	II
Pollution degree	3	2	2
Rated voltage	630 V	1600 V	1600 V
Rated test voltage	8.0 kV	8 kV	8.0 kV
Insulating material class	CTI 600		
Rated wiring solid wire	0.08 - 4 mm²		
Rated wiring stranded wire	0.08 - 2.5 mm²		
Rated wiring solid wire	AWG 28 - 12		
Rated wiring stranded wire	AWG 28 - 12		
Clearance and creepage distances	8.28 mm		
Protection category according to IEC 60529	IP 20		
Min. insul. strip length	8 mm		
Color	black		

Dimensional drawing

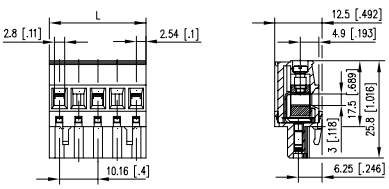

L = (Pole size - 1) * centerline + 5.08 mm (0.200 in.)

P/N

312142 ☐

Complete the part number by adding the pole size.

	02	03	04	05	06	07	08
09	10	11	12				

(Information: page 67)

Standard pole sizes

Pin Headers

for RP03AxxHBLF	Page
PT11AxxHBBF (Type 236)	193
PT11AxxVBBF (Type 235)	194

Accessories

for RP03AxxHBLF	Page
700025	298

Pin Headers

for RP03AxxHBLS	Page
PT11AxxHBBF (Type 236)	193
PT11AxxVBBF (Type 235)	194

Accessories

for RP03AxxHBLS	Page
700025	298

Product family	Pole size	Color	Option
RP03	Axx	H B	L F
Centerline	Design	Function	

*(Type 217)

*old product name

- screw type terminal block, pluggable
- centerline 10.16 mm, direction of connection 90°
- lift system
- color black, mounting flange

Technical data

V / A / AWG	600 / 12 / 28 - 12		
13.5 A / 630 V / 4 kV / 3 / 0.08 - 2.5 mm² / IEC 61984			
Overvoltage category	III	III	II
Pollution degree	3	2	2
Rated voltage	630 V	1600 V	1600 V
Rated test voltage	8.0 kV	8 kV	8.0 kV
Insulating material class	CTI 600		
Rated wiring solid wire	0.08 - 4 mm²		
Rated wiring stranded wire	0.08 - 2.5 mm²		
Rated wiring solid wire	AWG 28 - 12		
Rated wiring stranded wire	AWG 28 - 12		
Clearance and creepage distances	8.28 mm		
Protection category according to IEC 60529	IP 20		
Min. insul. strip length	8 mm		
Color	black		

Dimensional drawing

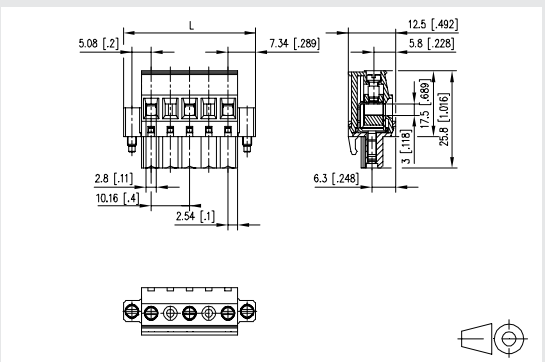

L = (Pole size - 1) * centerline + 14.68 mm (0.578 in.)

P/N

312172 ☐

Complete the part number by adding the pole size.

02	03	04	05	06

(Information: page 67)

Standard pole sizes

Product family	Pole size	Color	Option
RP03	Axx	H B	L S
Centerline	Design	Function	

*(Type 218)

*old product name

- screw type terminal block, pluggable
- centerline 10.16 mm, direction of connection 90°
- lift system
- color black, mounting flange

Technical data

V / A / AWG	600 / 12 / 28 - 12		
13.5 A / 630 V / 4 kV / 3 / 0.08 - 2.5 mm² / IEC 61984			
Overvoltage category	III	III	II
Pollution degree	3	2	2
Rated voltage	630 V	1600 V	1600 V
Rated test voltage	8.0 kV	8 kV	8.0 kV
Insulating material class	CTI 600		
Rated wiring solid wire	0.08 - 4 mm²		
Rated wiring stranded wire	0.08 - 2.5 mm²		
Rated wiring solid wire	AWG 28 - 12		
Rated wiring stranded wire	AWG 28 - 12		
Clearance and creepage distances	8.28 mm		
Protection category according to IEC 60529	IP 20		
Min. insul. strip length	8 mm		
Color	black		

Dimensional drawing

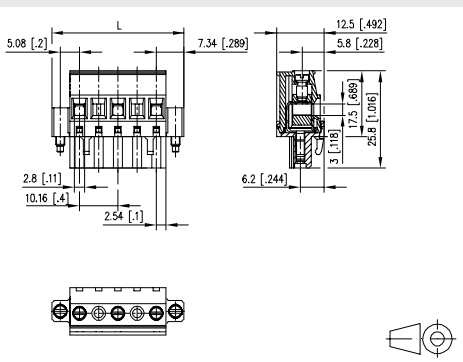

L = (Pole size - 1) * centerline + 14.68 mm (0.578 in.)

P/N

312182 ☐

Complete the part number by adding the pole size.

02	03	04	05	06

(Information: page 67)

Standard pole sizes

360272 | Single terminal block M2.6

- screw type terminal block, solderable, double solder pins
- direction of connection 90°
- color metal
- open construction, screw brought down by hand (transport safety)

Technical data

A / AWG	15 / 26 - 14		
Overvoltage category	III	III	II
Pollution degree	3	2	2
Rated test voltage	0.8 kV	4 kV	2.5 kV

Rated wiring solid wire	0.13 - 2 mm²
Rated wiring stranded wire	0.13 - 1.5 mm²
Rated wiring solid wire	AWG 26 - 14
Rated wiring stranded wire	AWG 26 - 14
Solder pin dimension	2 x 1.0 mm
Recommended pc board hole dia.	ø 1.5 mm
Solder pin length	3.5 mm
Protection category according to IEC 60529	IP 00
Color	metallike

Dimensional drawing

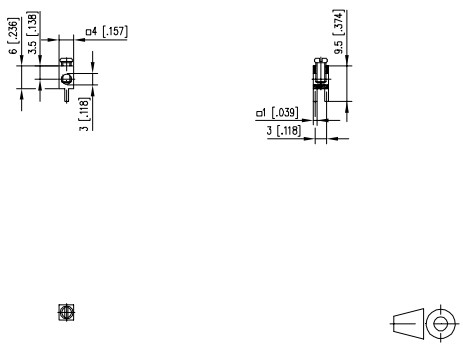

P/N	Color	Feature 1	Feature 2	
360272	metallike			

360273 | Single terminal block M2.6

- screw type terminal block, solderable, double solder pins
- direction of connection 90°
- wire protector
- color metal
- open construction, screw brought down by hand (transport safety)

Technical data

A / AWG	15 / 26 - 14		
Overvoltage category	III	III	II
Pollution degree	3	2	2
Rated test voltage	0.8 kV	4 kV	2.5 kV

Rated wiring solid wire	0.13 - 2 mm²
Rated wiring stranded wire	0.13 - 1.5 mm²
Rated wiring solid wire	AWG 26 - 14
Rated wiring stranded wire	AWG 26 - 14
Solder pin dimension	2 x 1.0 mm
Recommended pc board hole dia.	ø 1.5 mm
Solder pin length	3.5 mm
Color	metallike

Dimensional drawing

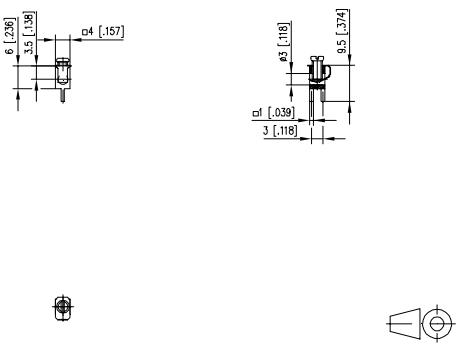

P/N	Color	Feature 1	Feature 2	
360273	metallike			

360410 | Single terminal block M3

- screw type terminal block, THR solderable, double solder pins
- direction of connection 90°
- color metal
- Tape & Reel packaging
- open construction, screw brought down by hand (transport safety)

Technical data

A / AWG 15 / 30 - 18

Rated wiring solid wire	0.05 - 1.5 mm²
Rated wiring stranded wire	0.05 - 1.0 mm²
Rated wiring solid wire	AWG 30 - 16
Rated wiring stranded wire	AWG 30 - 18
Solder pin dimension	2 x 1.0 mm
Recommended pc board hole dia.	ø 1.5 mm
Solder pin length	3.5 mm
Protection category according to IEC 60529	IP 00
Color	metallike

Dimensional drawing

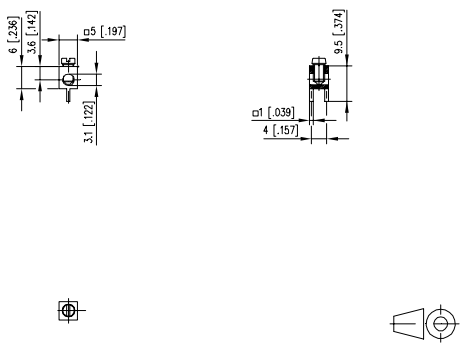

P/N	Color	Feature 1	Feature 2	
360410	metallike			

360322 | Single terminal block M3

- screw type terminal block, THR solderable, double solder pins
- direction of connection 90°
- wire protector
- color metal
- Tape & Reel packaging
- open construction, screw brought down by hand (transport safety)

Technical data

A / AWG 15 / 30 - 16

A / AWG 15 / 30 - 16

Rated wiring solid wire	0.05 - 1.5 mm²
Rated wiring stranded wire	0.05 - 1.0 mm²
Rated wiring solid wire	AWG 30 - 16
Rated wiring stranded wire	AWG 30 - 18
Solder pin dimension	2 x 1.0 mm
Recommended pc board hole dia.	ø 1.5 mm
Solder pin length	3.5 mm
Protection category according to IEC 60529	IP 00
Color	metallike

Dimensional drawing

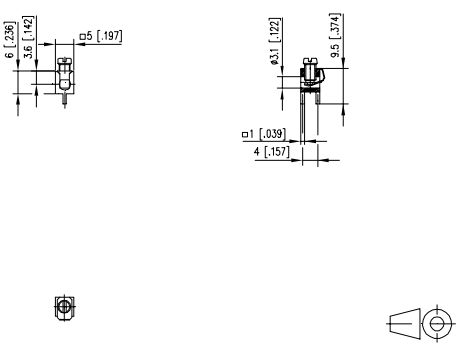

P/N	Color	Feature 1	Feature 2	
360322	metallike			

360381 | Single terminal block M3

- screw type terminal block, THR solderable, double solder pins
- direction of connection 90°
- color metal
- Tape & Reel packaging
- open construction, screw brought down by hand (transport safety)

Technical data

0.5 - 2.5 mm² AWG 30 - 12 / 16 A

Rated wiring solid wire	0.5 - 2.5 mm²
Rated wiring stranded wire	0.5 - 2.5 mm²
Rated wiring solid wire	AWG 30 - 12
Rated wiring stranded wire	AWG 30 - 12
Solder pin dimension	2 x 1.0 mm
Recommended pc board hole dia.	ø 1.5 mm
Solder pin length	2.25 mm
Protection category according to IEC 60529	IP 00
Color	metallike

Dimensional drawing

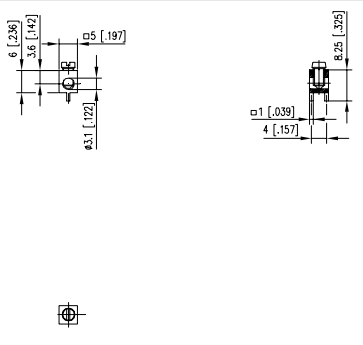

P/N	Color	Feature 1	Feature 2	
360381	metallike			

360291 | Single terminal block M3

- screw type terminal block, solderable, double solder pins
- direction of connection 90°
- wire protector
- color black
- with molded housing, screw brought down by hand (transport safety)

Technical data

c UL us V / A / AWG 50 / 15 / 22 - 14

Overvoltage category	III	III	II
Pollution degree	3	2	2
Rated test voltage	0.8 kV	4 kV	2.5 kV

Rated wiring solid wire	0.33 - 2 mm²
Rated wiring stranded wire	0.33 - 1.5 mm²
Rated wiring solid wire	AWG 22 - 14
Rated wiring stranded wire	AWG 22 - 14
Solder pin dimension	2 x 1.0 mm
Recommended pc board hole dia.	ø 1.5 mm
Solder pin length	3.5 mm
Color	black

Dimensional drawing

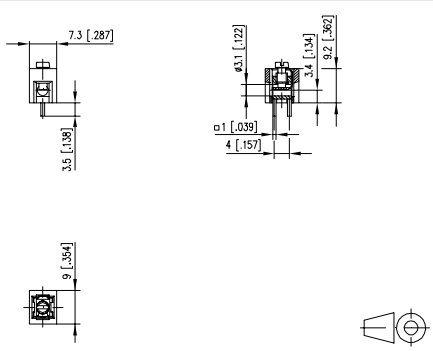

P/N	Color	Feature 1	Feature 2	
360291	black			

360271 | Single terminal block M3

- screw type terminal block, solderable
- direction of connection 90°
- wire protector
- color black
- with molded housing, single solder pin, screw brought down by hand (transport safety)

Technical data

cULus V / A / AWG 50 / 15 / 24 - 14

Overvoltage category	III	III	II
Pollution degree	3	2	2
Rated test voltage	0.8 kV	4 kV	2.5 kV

Rated wiring solid wire	0.33 - 2 mm²
Rated wiring stranded wire	0.33 - 1.5 mm²
Rated wiring solid wire	AWG 22 - 14
Rated wiring stranded wire	AWG 22 - 14
Solder pin dimension	1.2 mm
Recommended pc board hole dia.	ø 1.5 mm
Solder pin length	2.9 mm
Color	black

Dimensional drawing

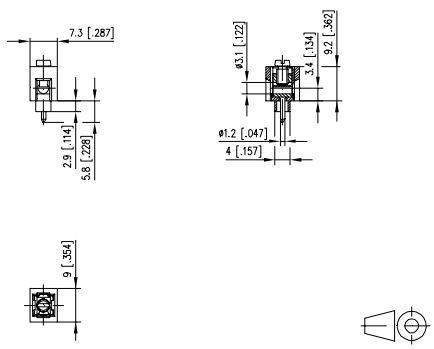

P/N	Color	Feature 1	Feature 2	
360271	black			

360425 | Single terminal block M4

- screw type terminal block, THR solderable
- direction of connection 90°
- color metal

Technical data

Rated current	50 A
Solder pin dimension	1.0 x 1.0 mm
Recommended pc board hole dia.	ø 1.6 mm
Solder pin length	3.5 mm
Protection category according to IEC 60529	IP 00
Color	metallike

Drill pattern

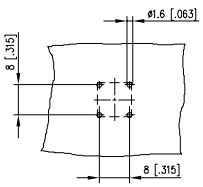

Dimensional drawing

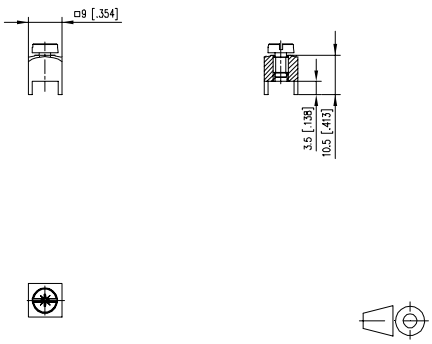

P/N	Color	Feature 1	Feature 2	
360425	metallike			

Notes

IDC type terminal blocks

Design specification

The product family of IDC type terminal blocks blocks consists of terminal blocks that are based on the principle of strip-free technology.
The product family of insulation displacement connectors consists of terminal blocks based on the principle of insulation displacement technology. By insulation displacement, we mean an electrical connection that is created by the cutting the insulation of the individual conductor inside the terminal block with a knife contact. It is suitable for solid and stranded copper wires and allows direct clamping without pre-treatment of the conductor. The insulation material has to be PVC or another material with properties that harmonize with the cut and clamp action. That means complete displacement of the insulation material by the inner knife flanks should be possible without damaging the conductor. In addition the insulation sleeve of stranded conductors has to be able to keep the single wires in place so that they are not displaced during the termination process.
We would be pleased to advise you!

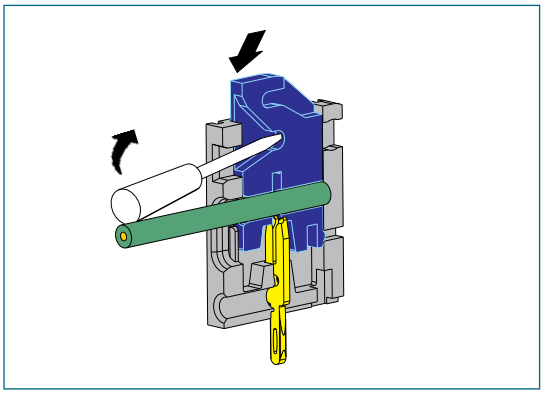

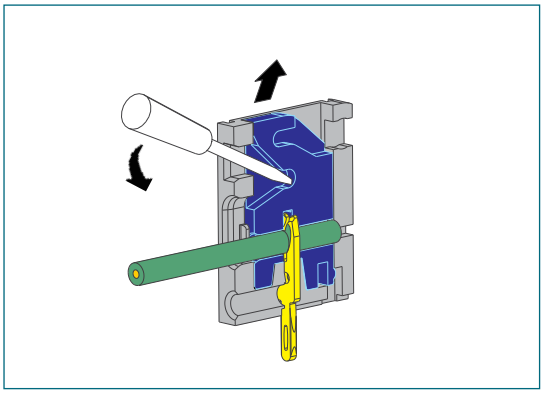

IDC type terminal blocks

Printing options
We offer individual printing of your terminal blocks. Figures or symbols, anti-clockwise or clockwise, legible or bottom up depending on the technical feasibility. Ink-jet print, pad printing and hot stamping are available as methods. Design your individual terminal block with us.

Color options
You can order the terminal blocks in a variety of sizes and also often vary the colors within a terminal block, if required. This is for instance helpful in housing integration to achieve an optically attractive overall picture and to us this as a further coding option. We would be pleased to advise you on the possible combinations.

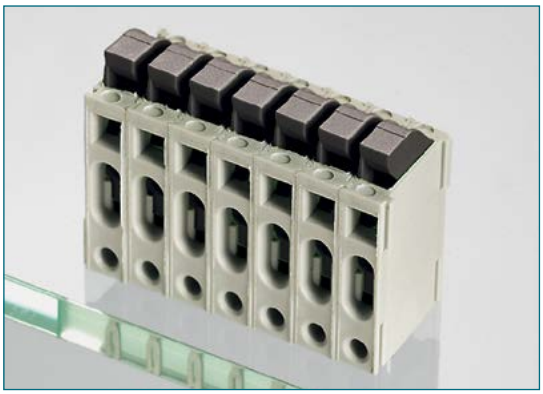

Product key IDC type terminal blocks

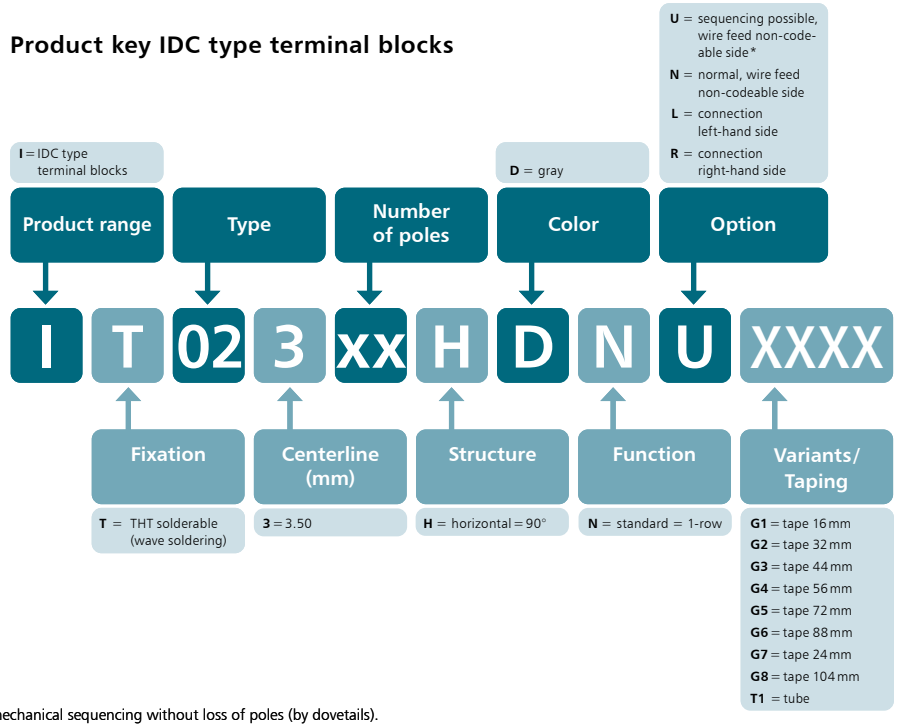

* Sequencing possible means the mechanical sequencing without loss of poles (by dovetails).

Symbol Definition

Guiding icons

- Spring clamp terminal block
- IDC terminal block
- Screw type terminal block
- Pin header
- Female connector
- Ethernet M12
- solderable
- pluggable
- Centerline
- Wire entry 90°
- Diagonal wire entry
- Wire entry 0°
- Lift system
- Wire protector
- modular
- Pin header for vertical mounting
- Shrouded pin header for vertical mounting
- Pin header with open ends for vertical mounting
- Pin header with closed ends for vertical mounting
- Pin header for horizontal mounting
- Shrouded pin header for horizontal mounting
- Pin header with open ends for horizontal mounting
- Pin header with closed ends for horizontal mounting
- designed for THR
- designed for SMT
- Tape & Reel possible

Product family	Pole size	Color	Option
IT02	3	xx	H	D	N	U	*(AIT023)
Centerline	Design	Function	*old product name

- insulation displacement connector, solderable
- centerline 3.50 mm, direction of connection 90°
- lift system, modular
- color gray

Technical data

c UL us V / A / AWG 150 / 2.5 / 24 - 22

SEV 0.34 mm² 130 V / 5 A / T60

Overvoltage category	III	III	II
Pollution degree	3	2	2
Rated voltage	160 V	400 V	400 V
Rated test voltage	2.5 kV	2.5 kV	2.5 kV
Insulating material class	CTI 600		
Rated wiring solid wire	0.2 - 0.34 mm²		
Rated wiring stranded wire	0.2 - 0.34 mm²		
Rated wiring solid wire	AWG 24 - 22		
Rated wiring stranded wire	AWG 24 - 22		
Clearance and creepage distances	2.3 mm		
Solder pin dimension	0.6 x 1.1 mm		
Recommended pc board hole dia.	ø 1.4 mm		
Solder pin length	3.5 mm		
Protection category according to IEC 60529	IP 20		
Color	gray		

Dimensional drawing

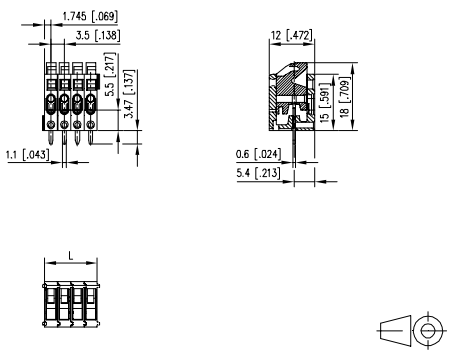

L = (Pole size - 1) * centerline + 3.5 mm (0.138 in.)

P/N

AIT023 ☐

Complete the part number by adding the pole size.

	02	03	04	05	06	07	08
09	10	11	12	13	14	15	16
17	18	19	20	21	22	23	24

(Information: page 135)

■ **Standard pole sizes**

Notes

Pin headers & female connectors

Pin headers and female connectors

Pin headers and female connectors

For a combination with terminal blocks, METZ CONNECT offers also a large product portfolio of pin headers and female connectors. We offer pin headers and female connectors for standard soldering processes as well as reflow-capable versions as THR or SMD/SMT, as loose bulk goods or as Tape & Reel solutions.

We offer pin headers and female connectors with various centerlines and different numbers of poles for vertical and horizontal mounting solutions.

We offer individual printing of your pin headers and female connectors according to your demands and do also offer various base colors.

Pin headers and female connectors

Design specification

Contact pins
Contact pins are made of a wrought copper alloy and have a surface protection. Silver plating is available as a standard procedure.

Electro tin-plating, gold flash plating or hard gold-plating are possible on request.

Note regarding the storage of pin headers/ female connectors with passivated silver pins:
- closed in poly-bags and not directly in the cardboard packaging
- no direct sunlight
- room temperature
- no exposure to aggressive ambient conditions

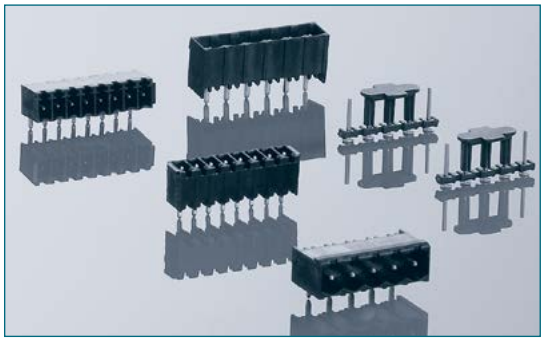

Reflow-compatible components
METZ CONNECT offers a wide range of pin headers/female connectors in reflow-compatible designs. The demand for components that can be soldered by THR (through hole reflow) or SMT (surface mount technology) is constantly growing thanks to ever increasing degrees of automation in the production processes. In addition, the use of pin headers/female connectors in combination with the pluggable terminals and spring clamp terminal blocks as counter pieces is already an intelligent solution for flexible connection tasks in the PC board environment anyway. Through the THR method, pin headers can be processed along with SMT components in the reflow soldering process. We also have a range of "Tape & Reel" pin headers and female connectors for automatic assembly. Please ask us about these, we would be pleased to show you our solutions.

"Tape & Reel" is the name given to a taped form of packaging. The aim of this packaging variant is to automate production processes. The components are packed in a blister tape and welded in a protective foil. This tape is then wound round a reel. Taping corresponds to DIN EN 60286.

METZ CONNECT standard:
- Reel diameter: 15" (13", 7" on request)
- Tape width: according to standard, depending on the number of positions

Coding
Some of the pin headers/female connectors with open or closed ends can be coded by inserting coding pins into the respective slots. If coded correctly, the ridges of the respective coding pins slide past each other and terminal block and pin header/female connecter mate. This method of coding enables a plug connector to be distinctively assembled without loss of a pole.

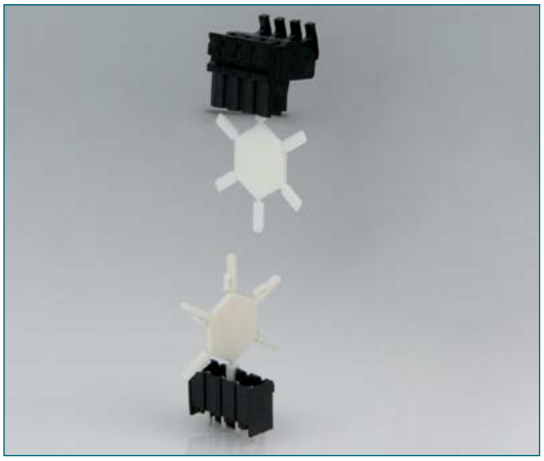

U | Contact

Pin headers and female connectors

Printing options
We offer individual printing of your headers/socket panels. Figures or symbols, anti-clockwise or clockwise, legible or bottom up depending on the technical feasibility. Ink-jet print, pad printing and hot stamping are available as methods. Design your individual header with us.

Color options
You can order the headers/socket panels in a variety of basic colors. This is for instance helpful in housing integration to achieve an optically attractive overall picture and to us this as a further coding option. We would be pleased to advise you on the possible colors.

Product key pin headers and female connectors

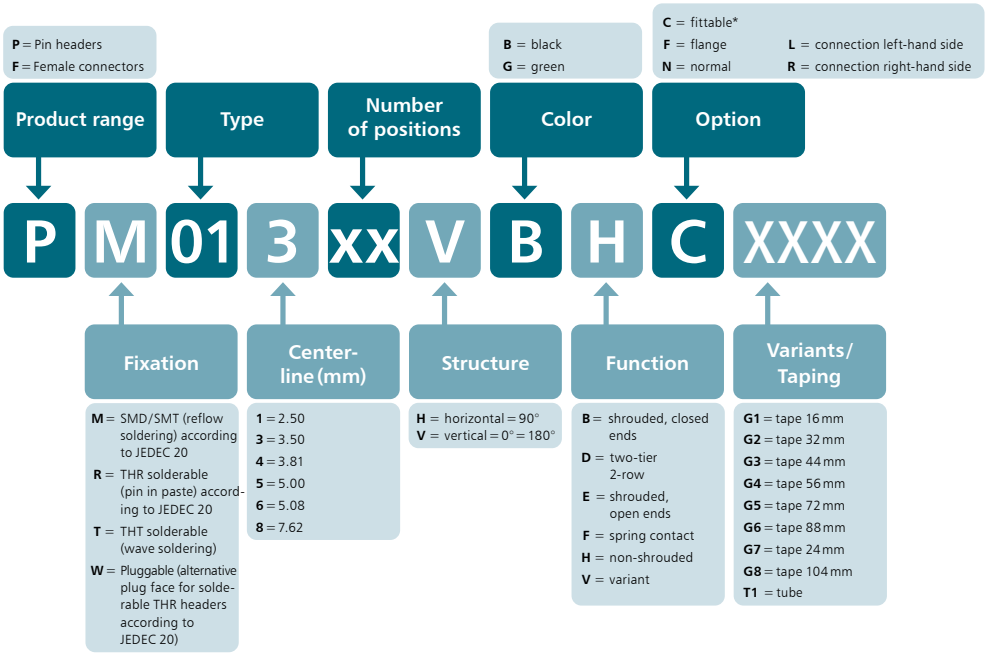

* Fittable stands for loose sequencing without loss of poles (without dovetails).

Symbol Definition

Guiding icons

	Spring clamp terminal block		Wire protector
	IDC terminal block		modular
	Screw type terminal block		Pin header for vertical mounting
	Pin header		Shrouded pin header for vertical mounting
	Female connector		Pin header with open ends for vertical mounting
	Ethernet M12		Pin header with closed ends for vertical mounting
	solderable		Pin header for horizontal mounting
	pluggable		Shrouded pin header for horizontal mounting
	Centerline		Pin header with open ends for horizontal mounting
	Wire entry 90°		Pin header with closed ends for horizontal mounting
	Diagonal wire entry		designed for THR
	Wire entry 0°		designed for SMT
	Lift system		Tape & Reel possible

Terminal blocks

for PT091xxHGBN — Page

SP051xxVGNN (ASP051) 47

Terminal blocks

for PT091xxVGBN — Page

SP051xxVGNN (ASP051) 47

Product family	Pole size	Color	Option
PT09	1xx	H	GBN
Centerline		Design	Function

*(Type 374) *old product name

- pin header, solderable
- centerline 2.50 mm, direction of connection 90°
- closed ends
- color green

Technical data

V / A	150 / 5		
6 A / 80 V / 2.5 kV / 3 IEC 61984			
Overvoltage category	III	III	II
Pollution degree	3	2	2
Rated voltage	80 V	320 V	320 V
Rated test voltage	2.5 kV	2.5 kV	2.5 kV
Insulating material class	CTI 600		
Clearance and creepage distances	1.7 mm		
Solder pin dimension	0.8 x 0.8 mm		
Recommended pc board hole dia.	ø 1.3 mm		
Solder pin length	3.2 mm		
Protection category according to IEC 60529	IP 00		
Color	green		

Dimensional drawing

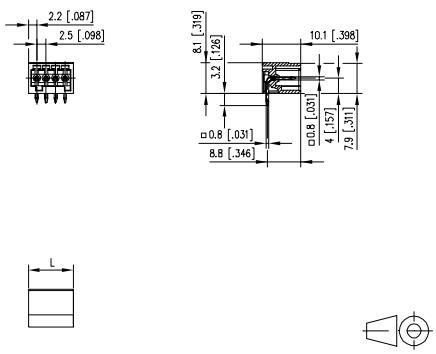

L = (Pole size - 1) * centerline + 4.4 mm (0.173 in.)

P/N

313741 ☐

Complete the part number by adding the pole size.

	02	03	04	05	06	07	08
09	10	11	12				

(Information: page 143)

Standard pole sizes

Product family	Pole size	Color	Option
PT09	1xx	V	GBN
Centerline		Design	Function

*(Type 373) *old product name

- pin header, solderable
- centerline 2.50 mm, direction of connection vertical 0°
- closed ends
- color green

Technical data

V / A	150 / 5		
6 A / 80 V / 2.5 kV / 3 IEC 61984			
Overvoltage category	III	III	II
Pollution degree	3	2	2
Rated voltage	80 V	320 V	320 V
Rated test voltage	2.5 kV	2.5 kV	2.5 kV
Insulating material class	CTI 600		
Clearance and creepage distances	1.7 mm		
Solder pin dimension	0.8 x 0.8 mm		
Recommended pc board hole dia.	ø 1.3 mm		
Solder pin length	3.2 mm		
Protection category according to IEC 60529	IP 00		
Color	green		

Dimensional drawing

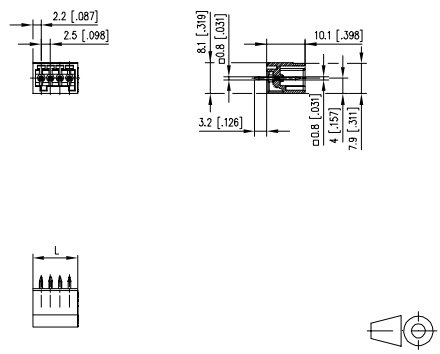

L = (Pole size - 1) * centerline + 4.4 mm (0.173 in.)

P/N

313731 ☐

Complete the part number by adding the pole size.

	02	03	04	05	06	07	08
09	10	11	12				

(Information: page 143)

Standard pole sizes

Terminal blocks

for PR013xxVBHC

Terminal blocks

for PR043xxHBBN

Accessories

for **PR043xxHBBN**

Product family | Pole size | Color | Option

PR013xxVBHC *(Type 024)

Centerline | Design | Function | *old product name

- pin header, THR solderable
- centerline 3.50 mm, direction of connection vertical 0°
- fittable without loss of poles
- color black
- Tape & Reel packaging

Technical data

cULus V / A 125 / 10

Overvoltage category	III	III	II
Pollution degree	3	2	2
Rated voltage	160 V	320 V	320 V
Rated test voltage	2.5 kV	2.5 kV	2.5 kV
Insulating material class	CTI 400		
Clearance and creepage distances	2.5 mm		
Solder pin dimension	1.0 mm		
Recommended pc board hole dia.	ø 1.3 mm		
Solder pin length	5.2 mm		
Protection category according to IEC 60529	IP 00		
Color	black		

Dimensional drawing

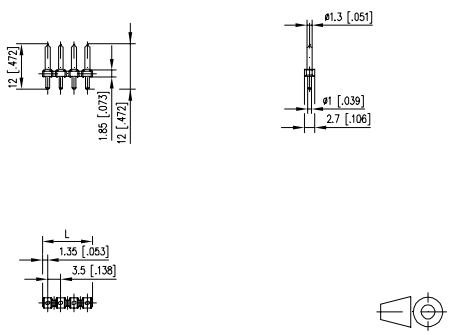

L = (Pole size - 1) * centerline + 3.5 mm (0.138 in.)

P/N

310241 ☐

Complete the part number by adding the pole size.

	02	03	04	05	06	07	08
09	10	11	12	13	14	15	16
17	18	19	20	21	22	23	24

(Information: page 143)

Standard pole sizes

Product family | Pole size | Color | Option

PR043xxHBBN *(Type 188)

Centerline | Design | Function | *old product name

- pin header, THR solderable
- centerline 3.50 mm, direction of connection 90°
- closed ends
- color black
- Tape & Reel packaging
- codeable

Technical data

cULus V / A 300 / 10

SEV 10 A / 130 V / 2.5 kV / 3 IEC 61984

Overvoltage category	III	III	II
Pollution degree	3	2	2
Rated voltage	200 V	500 V	500 V
Rated test voltage	2.5 kV	2.5 kV	2.5 kV
Insulating material class	CTI 600		
Clearance and creepage distances	2.7 mm		
Solder pin dimension	0.8 x 0.8 mm		
Recommended pc board hole dia.	ø 1.3 mm		
Solder pin length	3.4 mm		
Protection category according to IEC 60529	IP 00		
Color	black		

Dimensional drawing

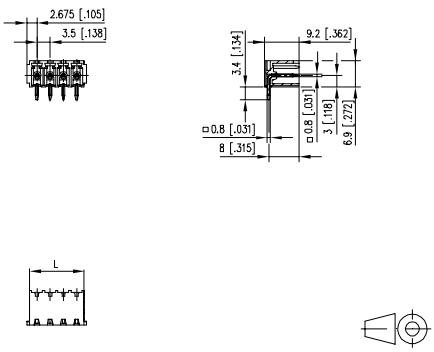

L = (Pole size - 1) * centerline + 5.35 mm (0.211 in.)

P/N

311881 ☐

Complete the part number by adding the pole size.

	02	03	04	05	06	07	08
09	10	11	12	13	14	15	16

(Information: page 143)

Standard pole sizes

Terminal blocks

for PR043xxHBBF — Page

SP063xxVGNF (ASP083) 49
RP043xxHBLF (Type 634) 102
RP043xxHBLS (Type 633) 102

Accessories

Page

for **PR043xxHBBF**

720293 296

Terminal blocks

for PW063xxHBEC — Page

SW063xxVBNN 48
FW143xxVBFC 197

Product family	Pole size	Color	Option
PR043	xx	H B	B F
Centerline	Design	Function	

PR043xxHBBF *(Type 388)

*old product name

- pin header, THR solderable
- centerline 3.50 mm, direction of connection 90°
- closed ends
- color black, mounting flange
- Tape & Reel packaging
- codeable

Technical data

cULus V / A	300 / 10		
SEV 10 A / 130 V / 2.5 kV / 3 IEC 61984			
Overvoltage category	III	III	II
Pollution degree	3	2	2
Rated voltage	200 V	500 V	500 V
Rated test voltage	2.5 kV	2.5 kV	2.5 kV
Insulating material class	CTI 600		
Clearance and creepage distances	2.7 mm		
Solder pin dimension	0.8 x 0.8 mm		
Recommended pc board hole dia.	ø 1.3 mm		
Solder pin length	3.4 mm		
Protection category according to IEC 60529	IP 00		
Color	black		

Dimensional drawing

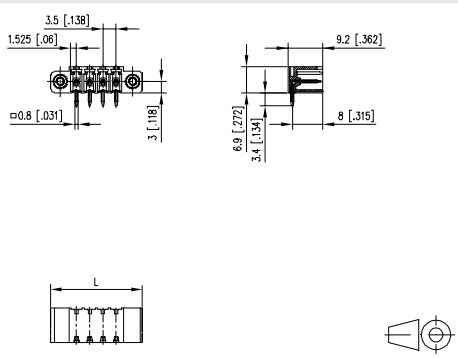

L = (Pole size - 1) * centerline + 13.8 mm (0.543 in.)

P/N
313881 □

Complete the part number by adding the pole size.

	02	03	04	05	06	07	08
09	10	11	12	13	14	15	16

(Information: page 143)

Standard pole sizes

* Approval pending

Product family	Pole size	Color	Option
PW063	xx	H B	E C
Centerline	Design	Function	

PW063xxHBEC *(Type 527)

*old product name

- pin header, THR solderable
- centerline 3.50 mm, direction of connection 90°
- open ends, fittable without loss of poles
- color black
- Tape & Reel packaging
- with alternative face, codeable

Technical data

cULus V / A	300 / 10		
SEV* 10 A / 130 V / 2.5 kV / 3 IEC 61984			
Overvoltage category	III	III	II
Pollution degree	3	2	2
Rated voltage	160 V	320 V	320 V
Rated test voltage	2.5 kV	2.5 kV	2.5 kV
Insulating material class	CTI 400		
Clearance and creepage distances	2.48 mm		
Solder pin dimension	1.0 x 1.0 mm		
Recommended pc board hole dia.	ø 1.4 mm		
Solder pin length	3.2 mm		
Protection category according to IEC 60529	IP 10		
Color	black		

Dimensional drawing

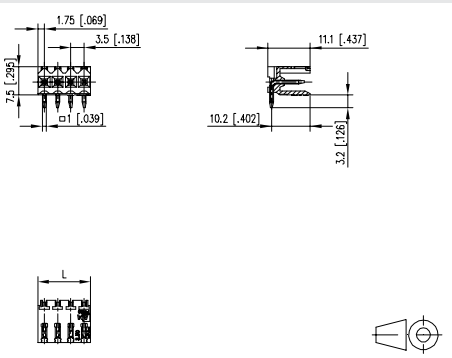

L = (Pole size - 1) * centerline + 3.5 mm (0.138 in.)

P/N
315271 □

Complete the part number by adding the pole size.

	02	03	04	05	06	07	08
09	10	11	12	13	14	15	16
17	18	19	20	21	22	23	24

(Information: page 143)

Standard pole sizes

Terminal blocks

for PW063xxHBBN

Terminal blocks

for PW063xxHBBF

* Approval pending

Product family	Pole size	Color	Option	
PW063	xx	H	B	B N *(Type 523)
Centerline		Design	Function	*old product name

- pin header, THR solderable
- centerline 3.50 mm, direction of connection 90°
- closed ends
- color black
- Tape & Reel packaging
- with alternative face, codeable

Technical data

cULus V / A	300 / 10		
SEV* 10 A / 130 V / 2.5 kV / 3 IEC 61984			
Overvoltage category	III	III	II
Pollution degree	3	2	2
Rated voltage	160 V	320 V	320 V
Rated test voltage	2.5 kV	2.5 kV	2.5 kV
Insulating material class	CTI 400		
Clearance and creepage distances	2.48 mm		
Solder pin dimension	1.0 x 1.0 mm		
Recommended pc board hole dia.	ø 1.4 mm		
Solder pin length	3.2 mm		
Protection category according to IEC 60529	IP 10		
Color	black		

Dimensional drawing

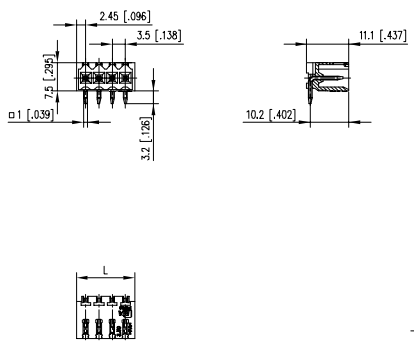

L = (Pole size - 1) * centerline + 4.9 mm (0.193 in.)

P/N

315231 □

Complete the part number by adding the pole size.

	02	03	04	05	06	07	08
09	10	11	12	13	14	15	16
17	18	19	20	21	22	23	24

(Information: page 143)

Standard pole sizes

* Approval pending

Product family	Pole size	Color	Option	
PW063	xx	H	B	B F *(Type 525)
Centerline		Design	Function	*old product name

- pin header, THR solderable
- centerline 3.50 mm, direction of connection 90°
- closed ends
- color black, mounting flange
- Tape & Reel packaging
- with alternative face, codeable

Technical data

cULus V / A	300 / 10		
SEV* 10 A / 130 V / 2.5 kV / 3 IEC 61984			
Overvoltage category	III	III	II
Pollution degree	3	2	2
Rated voltage	160 V	320 V	320 V
Rated test voltage	2.5 kV	2.5 kV	2.5 kV
Insulating material class	CTI 400		
Clearance and creepage distances	2.48 mm		
Solder pin dimension	1.0 x 1.0 mm		
Recommended pc board hole dia.	ø 1.4 mm		
Solder pin length	3.2 mm		
Protection category according to IEC 60529	IP 10		
Color	black		

Dimensional drawing

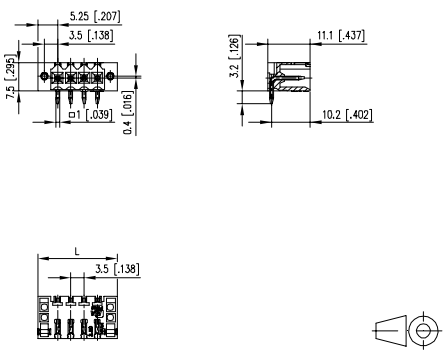

L = (Pole size - 1) * centerline + 10.5 mm (0.413 in.)

P/N

315251 □

Complete the part number by adding the pole size.

	02	03	04	05	06	07	08
09	10	11	12	13	14	15	16
17	18	19	20	21	22	23	24

(Information: page 143)

Standard pole sizes

Terminal blocks

Accessories

Terminal blocks

Accessories

Product family	Pole size	Color	Option
PT09	3xx	H B	B N
Centerline	Design	Function	

*(Type 342) *old product name

- pin header, solderable
- centerline 3.50 mm, direction of connection 90°
- closed ends
- color black
- codeable

Technical data

c UL us V / A	300 / 8		
SEV 9 A / 125 V / 2.5 kV / 3 IEC 61984			
Overvoltage category	III	III	II
Pollution degree	3	2	2
Rated voltage	200 V	500 V	500 V
Rated test voltage	2.5 kV	2.5 kV	2.5 kV
Insulating material class	CTI 600		
Clearance and creepage distances	2.7 mm		
Solder pin dimension	0.8 x 0.8 mm		
Recommended pc board hole dia.	ø 1.4 mm		
Solder pin length	3.5 mm		
Protection category according to IEC 60529	IP 00		
Color	black		

Dimensional drawing

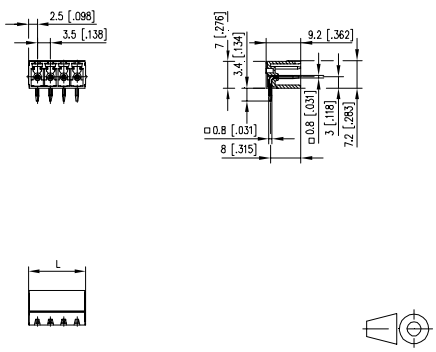

L = (Pole size - 1) * centerline + 5 mm (0.197 in.)

P/N
313421 ☐

Complete the part number by adding the pole size.

	02	03	04	05	06	07	08
09	10	11	12	13	14	15	16

(Information: page 143)

■ Standard pole sizes

Product family	Pole size	Color	Option
PT09	3xx	H B	B F
Centerline	Design	Function	

*(Type 394) *old product name

- pin header, solderable
- centerline 3.50 mm, direction of connection 90°
- closed ends
- color black, mounting flange
- codeable

Technical data

c UL us V / A	300 / 8		
SEV 9 A / 125 V / 2.5 kV / 3 IEC 61984			
Overvoltage category	III	III	II
Pollution degree	3	2	2
Rated voltage	200 V	500 V	500 V
Rated test voltage	2.5 kV	2.5 kV	2.5 kV
Insulating material class	CTI 600		
Clearance and creepage distances	2.7 mm		
Solder pin dimension	0.8 x 0.8 mm		
Recommended pc board hole dia.	ø 1.4 mm		
Solder pin length	3.5 mm		
Protection category according to IEC 60529	IP 00		
Color	black		

Dimensional drawing

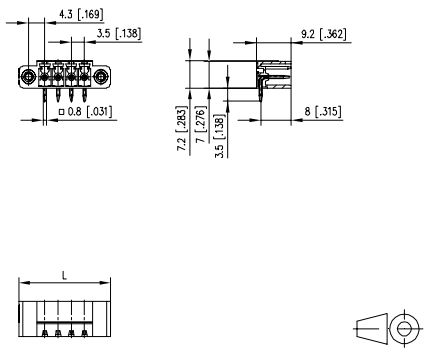

L = (Pole size - 1) * centerline + 13.8 mm (0.543 in.)

P/N
313941 ☐

Complete the part number by adding the pole size.

	02	03	04	05	06	07	08
09	10	11	12	13	14	15	16

(Information: page 143)

■ Standard pole sizes

Terminal blocks

for PT113xxHBBN — Page

RP013xxVBWN (Type 169) 105

Accessories

Page

for **PT113xxHBBN**

720243 296

720243 297

Terminal blocks

for PR033xxVBHC — Page

RP023xxHBWC (Type 166) 100

Product family | Pole size | Color | Option

PT113xxHBBN *(Type 182)

Centerline | Design | Function | *old product name

- pin header, solderable
- centerline 3.50 mm, direction of connection 90°
- closed ends
- color black
- codeable

Technical data

V / A	300 / 10		
6 A / 125 V / 2.5 kV / 3 IEC 61984			
Overvoltage category	III	III	II
Pollution degree	3	2	2
Rated voltage	200 V	500 V	500 V
Rated test voltage	2.5 kV	2.5 kV	2.5 kV
Insulating material class	CTI 600		
Clearance and creepage distances	2.5 mm		
Solder pin dimension	1.0 x 1.0 mm		
Recommended pc board hole dia.	ø 1.5 mm		
Solder pin length	3.5 mm		
Protection category according to IEC 60529	IP 00		
Color	black		

Dimensional drawing

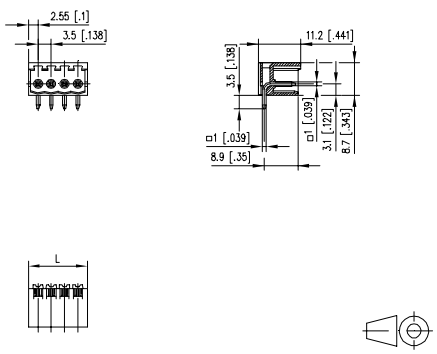

L = (Pole size - 1) * centerline + 5.1 mm (0.201 in.)

P/N

311821 □

Complete the part number by adding the pole size.

	02	03	04	05	06	07	08
09	10	11	12	13	14	15	16
17	18						

(Information: page 143)

Standard pole sizes

SEV Reg 130002

Product family | Pole size | Color | Option

PR033xxVBHC *(Type 224)

Centerline | Design | Function | *old product name

- pin header, THR solderable
- centerline 3.50 mm, direction of connection vertical 0°
- fittable without loss of poles
- color black
- Tape & Reel packaging

Technical data

V / A	300 / 15		
SEV Reg 130002 6 A / 200 V / 2.5 kV / 3 IEC 61984			
Overvoltage category	III	III	II
Pollution degree	3	2	2
Rated voltage	200 V	500 V	500 V
Rated test voltage	2.5 kV	2.5 kV	2.5 kV
Insulating material class	CTI 600		
Clearance and creepage distances	2.5 mm		
Solder pin dimension	1.0 mm		
Recommended pc board hole dia.	ø 1.3 mm		
Solder pin length	3.6 mm		
Protection category according to IEC 60529	IP 00		
Color	black		

Dimensional drawing

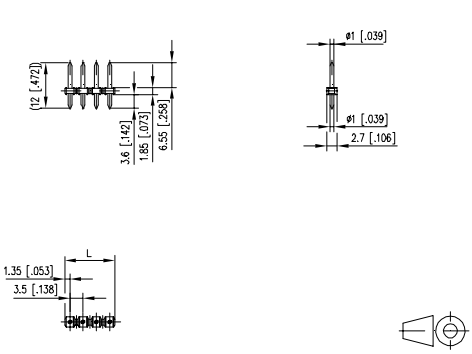

L = (Pole size - 1) * centerline + 2.7 mm (0.106 in.)

P/N

312241 □

Complete the part number by adding the pole size.

	02	03	04	05	06	07	08
09	10	11	12	13	14	15	16
17	18	19	20	21	22	23	24

(Information: page 143)

Standard pole sizes

Terminal blocks

for PR043xxVBBN — Page

Accessories

for **PR043xxVBBN** — Page

Terminal blocks

for PR043xxVBBF — Page

Accessories

for **PR043xxVBBF** — Page

Product family | Pole size | Color | Option

PR043xxVBBN *(Type 189)

Centerline | Design | Function | *old product name

- pin header, THR solderable
- centerline 3.50 mm, direction of connection vertical 0°
- closed ends
- color black
- Tape & Reel packaging
- codeable

Technical data

c UL us V / A	300 / 10		
SEV 10 A / 130 V / 2.5 kV / 3 IEC 61984			
Overvoltage category	III	III	II
Pollution degree	3	2	2
Rated voltage	200 V	500 V	500 V
Rated test voltage	2.5 kV	2.5 kV	2.5 kV
Insulating material class	CTI 600		
Clearance and creepage distances	2.7 mm		
Solder pin dimension	0.8 x 0.8 mm		
Recommended pc board hole dia.	ø 1.3 mm		
Solder pin length	3.2 mm		
Protection category according to IEC 60529	IP 00		
Color	black		

Dimensional drawing

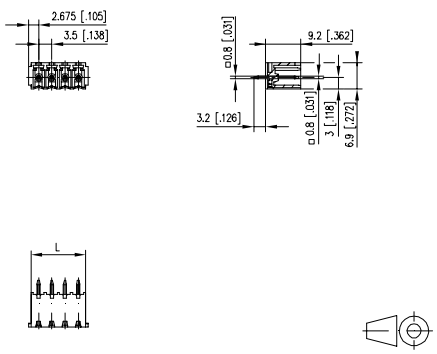

L = (Pole size - 1) * centerline + 5.35 mm (0.211 in.)

P/N
311891 □

Complete the part number by adding the pole size.

	02	03	04	05	06	07	08
09	10	11	12	13	14	15	16

(Information: page 143)

Standard pole sizes

Product family | Pole size | Color | Option

PR043xxVBBF *(Type 389)

Centerline | Design | Function | *old product name

- pin header, THR solderable
- centerline 3.50 mm, direction of connection vertical 0°
- closed ends
- color black, mounting flange
- Tape & Reel packaging
- codeable

Technical data

c UL us V / A	300 / 10		
SEV 10 A / 130 V / 2.5 kV / 3 IEC 61984			
Overvoltage category	III	III	II
Pollution degree	3	2	2
Rated voltage	200 V	500 V	500 V
Rated test voltage	2.5 kV	2.5 kV	2.5 kV
Insulating material class	CTI 600		
Clearance and creepage distances	2.7 mm		
Solder pin dimension	0.8 x 0.8 mm		
Recommended pc board hole dia.	ø 1.3 mm		
Solder pin length	3.2 mm		
Protection category according to IEC 60529	IP 00		
Color	black		

Dimensional drawing

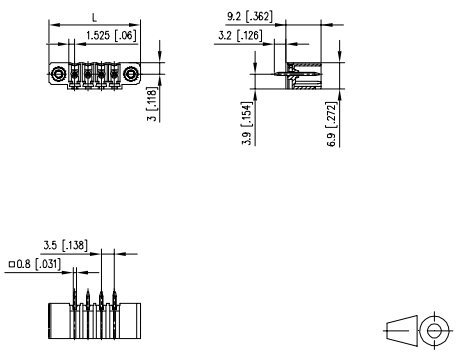

L = (Pole size - 1) * centerline + 13.8 mm (0.543 in.)

P/N
313891 □

Complete the part number by adding the pole size.

	02	03	04	05	06	07	08
09	10	11	12	13	14	15	16

(Information: page 143)

Standard pole sizes

Terminal blocks

for PW063xxVBEC

Terminal blocks

for PW063xxVBBN

* Approval pending

Product family	Pole size	Color	Option
PW063	xx	VB	EC
Centerline	Design	Function	

*(Type 528)

*old product name

- pin header, THR solderable
- centerline 3.50 mm, direction of connection vertical 0°
- open ends, fittable without loss of poles
- color black
- Tape & Reel packaging
- with alternative face, codeable

Technical data

V / A	300 / 10		
10 A / 130 V / 2.5 kV / 3 IEC 61984			
Overvoltage category	III	III	II
Pollution degree	3	2	2
Rated voltage	160 V	320 V	320 V
Rated test voltage	2.5 kV	2.5 kV	2.5 kV
Insulating material class	CTI 400		
Clearance and creepage distances	2.48 mm		
Solder pin dimension	1.0 x 1.0 mm		
Recommended pc board hole dia.	ø 1.4 mm		
Solder pin length	3.2 mm		
Protection category according to IEC 60529	IP 10		
Color	black		

Dimensional drawing

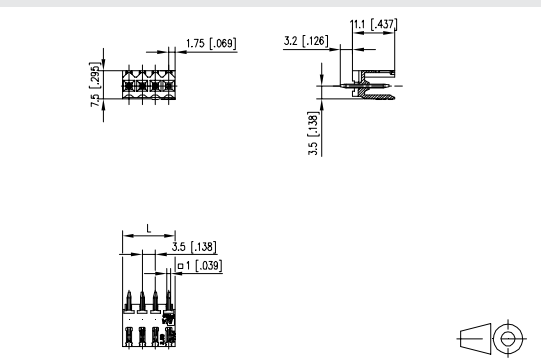

L = (Pole size - 1) * centerline + 3.5 mm (0.138 in.)

P/N

315281 □

Complete the part number by adding the pole size.

	02	03	04	05	06	07	08
09	10	11	12	13	14	15	16
17	18	19	20	21	22	23	24

(Information: page 143)

Standard pole sizes

* Approval pending

Product family	Pole size	Color	Option
PW063	xx	VB	BN
Centerline	Design	Function	

*(Type 524)

*old product name

- pin header, THR solderable
- centerline 3.50 mm, direction of connection vertical 0°
- closed ends
- color black
- Tape & Reel packaging
- with alternative face, codeable

Technical data

V / A	300 / 10		
10 A / 130 V / 2.5 kV / 3 IEC 61984			
Overvoltage category	III	III	II
Pollution degree	3	2	2
Rated voltage	160 V	320 V	320 V
Rated test voltage	2.5 kV	2.5 kV	2.5 kV
Insulating material class	CTI 400		
Clearance and creepage distances	2.48 mm		
Solder pin dimension	1.0 x 1.0 mm		
Recommended pc board hole dia.	ø 1.4 mm		
Solder pin length	3.2 mm		
Protection category according to IEC 60529	IP 10		
Color	black		

Dimensional drawing

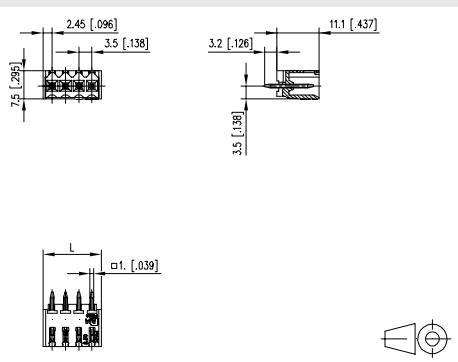

L = (Pole size - 1) * centerline + 4.9 mm (0.193 in.)

P/N

315241 □

Complete the part number by adding the pole size.

	02	03	04	05	06	07	08
09	10	11	12	13	14	15	16
17	18	19	20	21	22	23	24

(Information: page 143)

Standard pole sizes

Terminal blocks

for PW063xxVBBF — Page

Terminal blocks

for PM013xxVBHC — Page

* Approval pending

Product family	Pole size	Color	Option
PW06	3xx	V B	B F
Centerline	Design	Function	

PW063xxVBBF *(Type 526)
*old product name

- pin header, THR solderable
- centerline 3.50 mm, direction of connection vertical 0°
- closed ends
- color black, mounting flange
- Tape & Reel packaging
- with alternative face, codeable

Technical data

cULus V / A 300 / 10

SEV* 10 A / 130 V / 2.5 kV / 3 IEC 61984

Overvoltage category	III	III	II
Pollution degree	3	2	2
Rated voltage	160 V	320 V	320 V
Rated test voltage	2.5 kV	2.5 kV	2.5 kV
Insulating material class	CTI 400		
Clearance and creepage distances	2.48 mm		
Solder pin dimension	1.0 x 1.0 mm		
Recommended pc board hole dia.	ø 1.4 mm		
Solder pin length	3.2 mm		
Protection category according to IEC 60529	IP 10		
Color	black		

Dimensional drawing

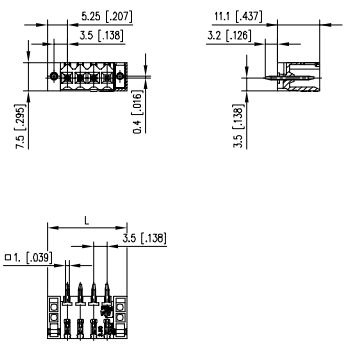

L = (Pole size - 1) * centerline + 10.5 mm (0.413 in.)

P/N
315261 □

Complete the part number by adding the pole size.

	02	03	04	05	06	07	08
09	10	11	12	13	14	15	16
17	18	19	20	21	22	23	24

(Information: page 143)

Standard pole sizes

Product family	Pole size	Color	Option
PM01	3xx	V B	H C
Centerline	Design	Function	

PM013xxVBHC *(Type 424)
*old product name

- pin header, SMT solderable
- centerline 3.50 mm, direction of connection vertical 0°
- fittable without loss of poles
- color black
- Tape & Reel packaging

Technical data

cULus V / A 300 / 15

Overvoltage category	III	III	II
Pollution degree	3	2	2
Rated voltage	32.0 V	200.0 V	200.0 V
Rated test voltage	2.5 kV	2.5 kV	2.5 kV
Insulating material class	CTI 400		
Clearance and creepage distances	1.5 mm		
Solder pin dimension	2.0 mm		
Protection category according to IEC 60529	IP 00		
Color	black		

Dimensional drawing

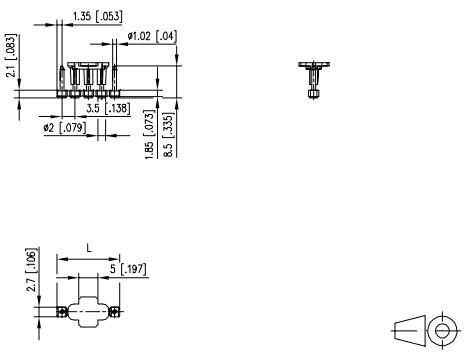

L = (Pole size - 1) * centerline + 2.7 mm (0.106 in.)

P/N
314241 □

Complete the part number by adding the pole size.

	02	03	04	05	06	07	08
09	10	11	12				

(Information: page 143)

Standard pole sizes

Terminal blocks

Accessories

Terminal blocks

Accessories

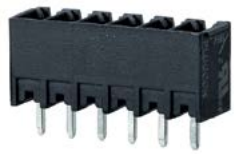

Product family	Pole size	Color	Option	
PT09	3xx	V	B	B N *(Type 343)
Centerline		Design	Function	*old product name

- pin header, solderable
- centerline 3.50 mm, direction of connection vertical 0°
- closed ends
- color black
- codeable

Technical data

cULus V / A	300 / 8		
SEV 9 A / 125 V / 2.5 kV / 3 IEC 61984			
Overvoltage category	III	III	II
Pollution degree	3	2	2
Rated voltage	200 V	500 V	500 V
Rated test voltage	2.5 kV	2.5 kV	2.5 kV
Insulating material class	CTI 600		
Clearance and creepage distances	2.7 mm		
Solder pin dimension	0.8 x 0.8 mm		
Recommended pc board hole dia.	ø 1.4 mm		
Solder pin length	3.5 mm		
Protection category according to IEC 60529	IP 00		
Color	black		

Dimensional drawing

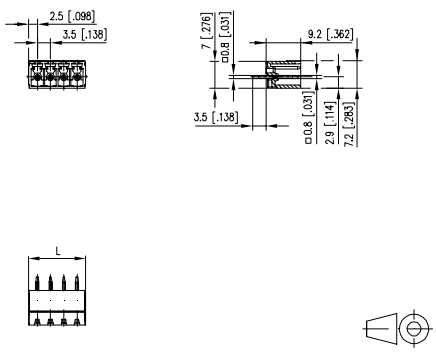

L = (Pole size - 1) * centerline + 5 mm (0.197 in.)

P/N

313431 □

Complete the part number by adding the pole size.

	02	03	04	05	06	07	08
09	10	11	12	13	14	15	16

(Information: page 143)

Standard pole sizes

Product family	Pole size	Color	Option	
PT11	3xx	V	B	B N *(Type 183)
Centerline		Design	Function	*old product name

- pin header, solderable
- centerline 3.50 mm, direction of connection vertical 0°
- closed ends
- color black
- codeable

Technical data

cULus V / A	300 / 10		
SEV 6 A / 125 V / 2.5 kV / 3 IEC 61984			
Overvoltage category	III	III	II
Pollution degree	3	2	2
Rated voltage	200 V	500 V	500 V
Rated test voltage	2.5 kV	2.5 kV	2.5 kV
Insulating material class	CTI 600		
Clearance and creepage distances	2.5 mm		
Solder pin dimension	1.0 x 1.0 mm		
Recommended pc board hole dia.	ø 1.5 mm		
Solder pin length	3.5 mm		
Protection category according to IEC 60529	IP 00		
Color	black		

Dimensional drawing

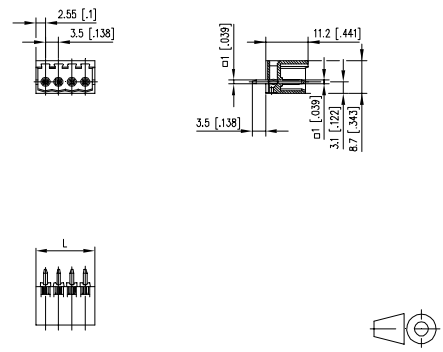

L = (Pole size - 1) * centerline + 5.1 mm (0.201 in.)

P/N

311831 □

Complete the part number by adding the pole size.

	02	03	04	05	06	07	08
09	10	11	12	13	14	15	16
17	18						

(Information: page 143)

Standard pole sizes

Terminal blocks

for PR044xxHBBN

Accessories

for **PR044xxHBBN**

Terminal blocks

for PR044xxHBBF

Accessories

for **PR044xxHBBF**

Product family | Pole size | Color | Option

PR044xxHBBN *(Type 190)

Centerline | Design | Function | *old product name

- pin header, THR solderable
- centerline 3.81 mm, direction of connection 90°
- closed ends
- color black
- Tape & Reel packaging
- codeable

Technical data

c UL us V / A	300 / 8		
SEV 10 A / 130 V / 2.5 kV / 3 IEC 61984			
Overvoltage category	III	III	II
Pollution degree	3	2	2
Rated voltage	200 V	500 V	500 V
Rated test voltage	4.0 kV	4 kV	4.0 kV
Insulating material class	CTI 600		
Clearance and creepage distances	3.01 mm		
Solder pin dimension	0.8 x 0.8 mm		
Recommended pc board hole dia.	ø 1.3 mm		
Solder pin length	3.5 mm		
Protection category according to IEC 60529	IP 00		
Color	black		

Dimensional drawing

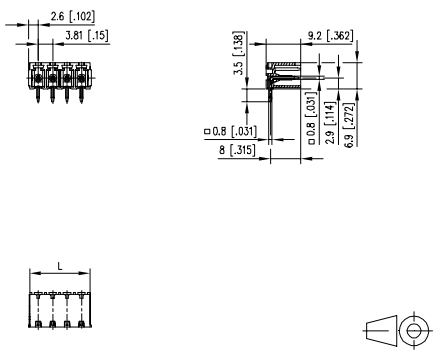

L = (Pole size - 1) * centerline + 5.2 mm (0.205 in.)

P/N

311901 ☐

Complete the part number by adding the pole size.

	02	03	04	05	06	07	08
09	10	11	12				

(Information: page 143)

Standard pole sizes

Product family | Pole size | Color | Option

PR044xxHBBF *(Type 390)

Centerline | Design | Function | *old product name

- pin header, THR solderable
- centerline 3.81 mm, direction of connection 90°
- closed ends
- color black, mounting flange
- Tape & Reel packaging
- codeable

Technical data

c UL us V / A	300 / 8		
SEV 10 A / 130 V / 2.5 kV / 3 IEC 61984			
Overvoltage category	III	III	II
Pollution degree	3	2	2
Rated voltage	200 V	500 V	500 V
Rated test voltage	4.0 kV	4 kV	4.0 kV
Insulating material class	CTI 600		
Clearance and creepage distances	3.01 mm		
Solder pin dimension	0.8 x 0.8 mm		
Recommended pc board hole dia.	ø 1.3 mm		
Solder pin length	3.5 mm		
Protection category according to IEC 60529	IP 00		
Color	black		

Dimensional drawing

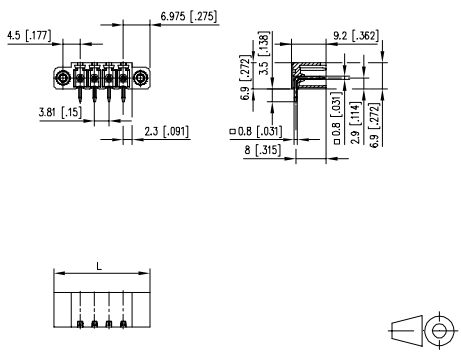

L = (Pole size - 1) * centerline + 13.95 mm (0.549 in.)

P/N

313901 ☐

Complete the part number by adding the pole size.

	02	03	04	05	06	07	08
09	10	11	12	13	14	15	16

(Information: page 143)

Standard pole sizes

Terminal blocks

for PT094xxHBBN	Page
SP064xxVGNN (ASP064)	50
RP034xxHBLN (Type 114)	106
RP034xxHBLO (Type 113)	106
RP034xxVBLN (Type 369)	107

Accessories

for PT094xxHBBN	Page
720293	296

Terminal blocks

for PT094xxHBBF	Page
SP064xxVGNF (ASP084)	51
RP034xxVBLF (Type 379)	107

Accessories

for PT094xxHBBF	Page
720293	296

Product family	Pole size	Color	Option
PT09	4xx	H	B	B	N	*(Type 382)
Centerline	Design	Function	*old product name

- pin header, solderable
- centerline 3.81 mm, direction of connection 90°
- closed ends
- color black
- codeable

Technical data

V / A	300 / 8		
9 A / 160 V / 2.5 kV / 3 IEC 61984			
Overvoltage category	III	III	II
Pollution degree	3	2	2
Rated voltage	200 V	500 V	500 V
Rated test voltage	4.0 kV	4 kV	4.0 kV
Insulating material class	CTI 600		
Clearance and creepage distances	3.01 mm		
Solder pin dimension	0.8 x 0.8 mm		
Recommended pc board hole dia.	ø 1.3 mm		
Solder pin length	3.5 mm		
Protection category according to IEC 60529	IP 00		
Color	black		

Dimensional drawing

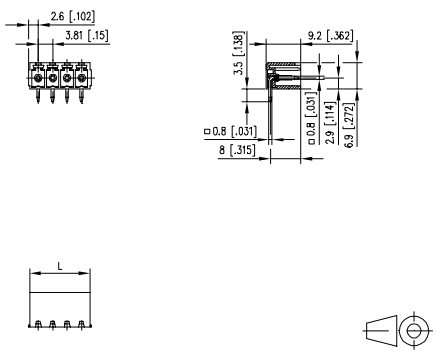

L = (Pole size - 1) * centerline + 5.2 mm (0.205 in.)

P/N

313821 ☐

Complete the part number by adding the pole size.

	02	03	04	05	06	07	08
09	10	11	12	13	14	15	16
17	18	19	20	21	22	23	24

(Information: page 143)

Standard pole sizes

Product family	Pole size	Color	Option
PT09	4xx	H	B	B	F	*(Type 392)
Centerline	Design	Function	*old product name

- pin header, solderable
- centerline 3.81 mm, direction of connection 90°
- closed ends
- color black, mounting flange
- codeable

Technical data

V / A	300 / 8		
9 A / 160 V / 2.5 kV / 3 IEC 61984			
Overvoltage category	III	III	II
Pollution degree	3	2	2
Rated voltage	200 V	500 V	500 V
Rated test voltage	4.0 kV	4 kV	4.0 kV
Insulating material class	CTI 600		
Clearance and creepage distances	3.01 mm		
Solder pin dimension	0.8 x 0.8 mm		
Recommended pc board hole dia.	ø 1.3 mm		
Solder pin length	3.5 mm		
Protection category according to IEC 60529	IP 00		
Color	black		

Dimensional drawing

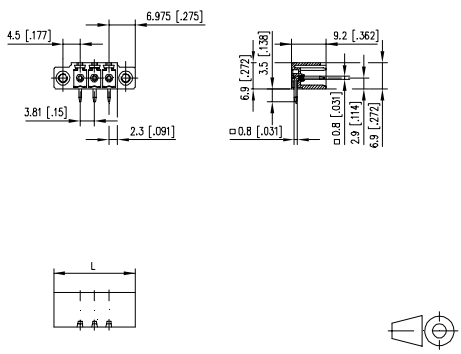

L = (Pole size - 1) * centerline + 13.95 mm (0.549 in.)

P/N

313921 ☐

Complete the part number by adding the pole size.

	02	03	04	05	06	07	08
09	10	11	12	13	14	15	16
17	18	19	20	21	22	23	24

(Information: page 143)

Standard pole sizes

Terminal blocks

for PR044xxVBBN — Page

Accessories

Page

for **PR044xxVBBN**

Terminal blocks

for PR044xxVBBF — Page

Accessories

Page

for **PR044xxVBBF**

Product family | Pole size | Color | Option

PR044xxVBBN *(Type 191)

Centerline | Design | Function | *old product name

- pin header, THR solderable
- centerline 3.81 mm, direction of connection vertical 0°
- closed ends
- color black
- Tape & Reel packaging
- codeable

Technical data

cULus V / A	300 / 8		
SEV	10 A / 130 V / 2.5 kV / 3 IEC 61984		
Overvoltage category	III	III	II
Pollution degree	3	2	2
Rated voltage	200 V	500 V	500 V
Rated test voltage	4.0 kV	4 kV	4.0 kV
Insulating material class	CTI 600		
Clearance and creepage distances	3.01 mm		
Solder pin dimension	0.8 x 0.8 mm		
Recommended pc board hole dia.	ø 1.3 mm		
Solder pin length	3.25 mm		
Protection category according to IEC 60529	IP 00		
Color	black		

Dimensional drawing

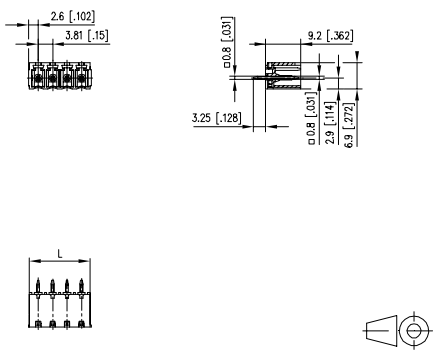

L = (Pole size - 1) * centerline + 5.2 mm (0.205 in.)

P/N **311911** ☐

Complete the part number by adding the pole size.

	02	03	04	05	06	07	08
09	10	11	12				

(Information: page 143)

Standard pole sizes

Product family | Pole size | Color | Option

PR044xxVBBF *(Type 391)

Centerline | Design | Function | *old product name

- pin header, THR solderable
- centerline 3.81 mm, direction of connection vertical 0°
- closed ends
- color black, mounting flange
- Tape & Reel packaging
- codeable

Technical data

cULus V / A	300 / 8		
SEV	10 A / 130 V / 250 kV / 3 IEC 61984		
Overvoltage category	III	III	II
Pollution degree	3	2	2
Rated voltage	200 V	500 V	500 V
Rated test voltage	4.0 kV	4 kV	4.0 kV
Insulating material class	CTI 600		
Clearance and creepage distances	3.01 mm		
Solder pin dimension	0.8 x 0.8 mm		
Recommended pc board hole dia.	ø 1.3 mm		
Solder pin length	3.25 mm		
Protection category according to IEC 60529	IP 00		
Color	black		

Dimensional drawing

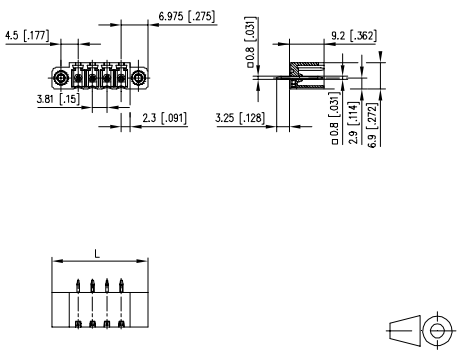

L = (Pole size - 1) * centerline + 13.95 mm (0.549 in.)

P/N **313911** ☐

Complete the part number by adding the pole size.

	02	03	04	05	06	07	08
09	10	11	12	13	14	15	16

(Information: page 143)

Standard pole sizes

Terminal blocks

for PT094xxVBBN — Page

- SP064xxVGNN (ASP064) 50
- RP034xxHBLN (Type 114) 106
- RP034xxHBLO (Type 113) 106
- RP034xxVBLN (Type 369) 107

Accessories

Page

for **PT094xxVBBN**

720293 296

Terminal blocks

for PT094xxVBBF — Page

- SP064xxVGNF (ASP084) 51
- RP034xxVBLF (Type 379) 107

Accessories

Page

for **PT094xxVBBF**

720293 296

Product family	Pole size	Color	Option
PT09	4xx	V	B	B	N	*(Type 383)
Centerline	Design	Function	*old product name

- pin header, solderable
- centerline 3.81 mm, direction of connection vertical 0°
- closed ends
- color black
- codeable

Technical data

cULus V / A	300 / 8		
SEV 9 A / 160 V / 2.5 kV / 3 IEC 61984			
Overvoltage category	III	III	II
Pollution degree	3	2	2
Rated voltage	200 V	500 V	500 V
Rated test voltage	4.0 kV	4 kV	4.0 kV
Insulating material class	CTI 600		
Clearance and creepage distances	3.01 mm		
Solder pin dimension	0.8 x 0.8 mm		
Recommended pc board hole dia.	ø 1.3 mm		
Solder pin length	3.25 mm		
Protection category according to IEC 60529	IP 00		
Color	black		

Dimensional drawing

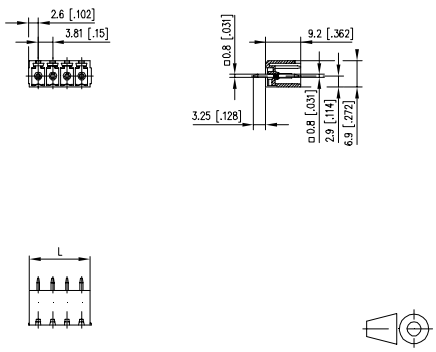

L = (Pole size - 1) * centerline + 5.2 mm (0.205 in.)

P/N

313831 ☐

Complete the part number by adding the pole size.

	02	03	04	05	06	07	08
09	10	11	12	13	14	15	16
17	18	19	20	21	22	23	24

(Information: page 143)

Standard pole sizes

Product family	Pole size	Color	Option
PT09	4xx	V	B	B	F	*(Type 393)
Centerline	Design	Function	*old product name

- pin header, solderable
- centerline 3.81 mm, direction of connection vertical 0°
- closed ends
- color black, mounting flange
- codeable

Technical data

cULus V / A	300 / 8		
SEV 9 A / 160 V / 2.5 kV / 3 IEC 61984			
Overvoltage category	III	III	II
Pollution degree	3	2	2
Rated voltage	200 V	500 V	500 V
Rated test voltage	4.0 kV	4 kV	4.0 kV
Insulating material class	CTI 600		
Clearance and creepage distances	3.01 mm		
Solder pin dimension	0.8 x 0.8 mm		
Recommended pc board hole dia.	ø 1.3 mm		
Solder pin length	3.25 mm		
Protection category according to IEC 60529	IP 00		
Color	black		

Dimensional drawing

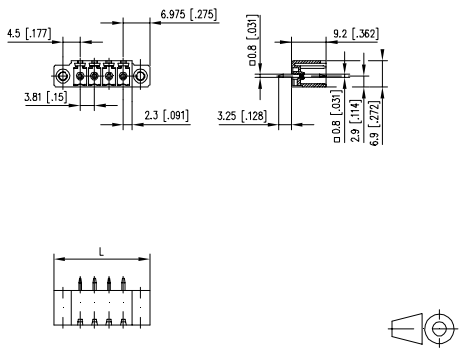

L = (Pole size - 1) * centerline + 13.95 mm (0.549 in.)

P/N

313931 ☐

Complete the part number by adding the pole size.

	02	03	04	05	06	07	08
09	10	11	12	13	14	15	16
17	18	19	20	21	22	23	24

(Information: page 143)

Standard pole sizes

Terminal blocks

for PR065xxHBEC

Accessories

for **PR065xxHBEC**

Terminal blocks

for PR065xxHBBN

Accessories

for **PR065xxHBBN**

Product family | Pole size | Color | Option

PR065xxHBEC *(Type 476)

Centerline | Design | Function | *old product name

- pin header, THR solderable
- centerline 5.00 mm, direction of connection 90°
- open ends
- color black
- Tape & Reel packaging
- codeable

Technical data

c UL us V / A	300 / 15		
SEV 13.5 A / 320 V / 4 kV / 3 IEC 61984			
Overvoltage category	III	III	II
Pollution degree	3	2	2
Rated voltage	320 V	800 V	800 V
Rated test voltage	4 kV	4.0 kV	4 kV
Insulating material class	CTI 600		
Clearance and creepage distances	4 mm		
Solder pin dimension	1.0 x 1.0 mm		
Recommended pc board hole dia.	ø 1.5 mm		
Solder pin length	3.4 mm		
Protection category according to IEC 60529	IP 00		
Color	black		

Dimensional drawing

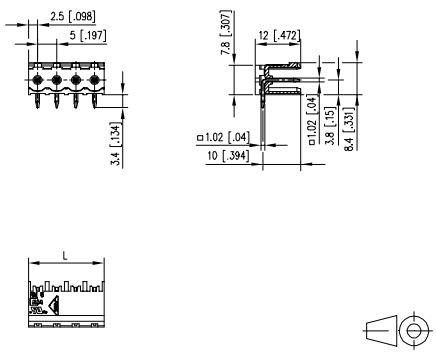

L = (Pole size - 1) * centerline + 5 mm (0.197 in.)

P/N

314761 □

Complete the part number by adding the pole size.

	02	03	04	05	06	07	08
09	10	11	12				

(Information: page 143)

Standard pole sizes

Product family | Pole size | Color | Option

PR065xxHBBN *(Type 176)

Centerline | Design | Function | *old product name

- pin header, THR solderable
- centerline 5.00 mm, direction of connection 90°
- closed ends
- color black
- Tape & Reel packaging
- codeable

Technical data

c UL us V / A	300 / 15		
SEV 13.5 A / 320 V / 4 kV / 3 IEC 61984			
Overvoltage category	III	III	II
Pollution degree	3	2	2
Rated voltage	320 V	800 V	800 V
Rated test voltage	4 kV	4.0 kV	4 kV
Insulating material class	CTI 600		
Clearance and creepage distances	4 mm		
Solder pin dimension	1.0 x 1.0 mm		
Recommended pc board hole dia.	ø 1.5 mm		
Solder pin length	3.45 mm		
Protection category according to IEC 60529	IP 00		
Color	black		

Dimensional drawing

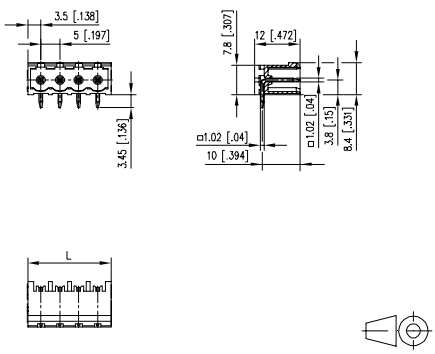

L = (Pole size - 1) * centerline + 7.0 mm (0.276 in.)

P/N

311761 □

Complete the part number by adding the pole size.

	02	03	04	05	06	07	08
09	10	11	12				

(Information: page 143)

Standard pole sizes

Terminal blocks

Accessories

Terminal blocks

Accessories

Product family	Pole size	Color	Option
PR065	xx	H	B B F
Centerline	Design	Function	

*(Type 396)

*old product name

- pin header, THR solderable
- centerline 5.00 mm, direction of connection 90°
- closed ends
- color black, mounting flange
- Tape & Reel packaging
- codeable

Technical data

cULus V / A	300 / 15		
SEV 13.5 A / 320 V / 4 kV / 3 IEC 61984			
Overvoltage category	III	III	II
Pollution degree	3	2	2
Rated voltage	320 V	800 V	800 V
Rated test voltage	4 kV	4.0 kV	4 kV
Insulating material class	CTI 600		
Clearance and creepage distances	4 mm		
Solder pin dimension	1.0 x 1.0 mm		
Recommended pc board hole dia.	ø 1.5 mm		
Solder pin length	3.45 mm		
Protection category according to IEC 60529	IP 00		
Color	black		

Dimensional drawing

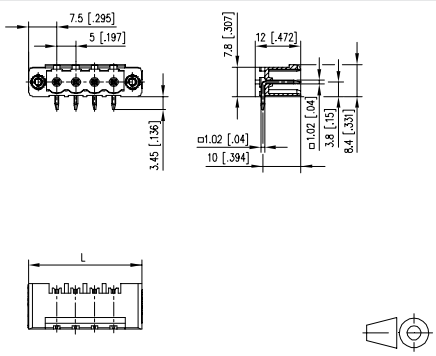

L = (Pole size - 1) * centerline + 7.0 mm (0.276 in.)

P/N

313961 ☐

Complete the part number by adding the pole size.

	02	03	04	05	06	07	08
09	10	11	12				

(Information: page 143)

Standard pole sizes

Product family	Pole size	Color	Option
PR075	xx	H	B E L
Centerline	Design	Function	

*(Type 337)

*old product name

- pin header, THR solderable
- centerline 5.00 mm, direction of connection 90°
- open ends, fittable without loss of poles
- color black
- Tape & Reel packaging
- codeable, connection left side, pluggable for module housing

Technical data

cULus V / A	300 / 17		
SEV 12 A / 250 V / 4 kV / 3 IEC 61984			
Overvoltage category	III	III	II
Pollution degree	3	2	2
Rated voltage	250 V	630 V	630 V
Rated test voltage	4.0 kV	4.0 kV	4 kV
Insulating material class	CTI 600		
Clearance and creepage distances	3.2 mm		
Solder pin dimension	1.0 x 1.0 mm		
Recommended pc board hole dia.	ø 1.4 mm		
Solder pin length	3.85 mm		
Protection category according to IEC 60529	IP 00		
Color	black		

Dimensional drawing

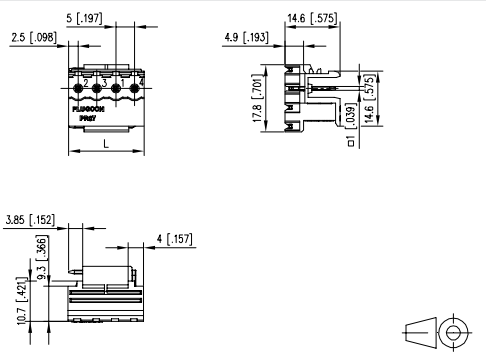

L = (Pole size - 1) * centerline + 5 mm (0.197 in.)

P/N

313371 ☐

Complete the part number by adding the pole size.

	02	03	04				

(Information: page 143)

Standard pole sizes

Terminal blocks

Accessories

Terminal blocks

Product family	Pole size	Color	Option
PR07	5xx	H	B E R

Centerline Design Function

*(Type 338) *old product name

- pin header, THR solderable
- centerline 5.00 mm, direction of connection 90°
- open ends, fittable without loss of poles
- color black
- Tape & Reel packaging
- codeable, connection right side, pluggable for module housing

Technical data

cULus V / A	300 / 17		
SEV 12 A / 250 V / 4 kV / 3 IEC 61984			
Overvoltage category	III	III	II
Pollution degree	3	2	2
Rated voltage	250 V	630 V	630 V
Rated test voltage	4.0 kV	4.0 kV	4 kV
Insulating material class	CTI 600		
Clearance and creepage distances	3.2 mm		
Solder pin dimension	1.0 x 1.0 mm		
Recommended pc board hole dia.	ø 1.4 mm		
Solder pin length	3.85 mm		
Protection category according to IEC 60529	IP 00		
Color	black		

Dimensional drawing

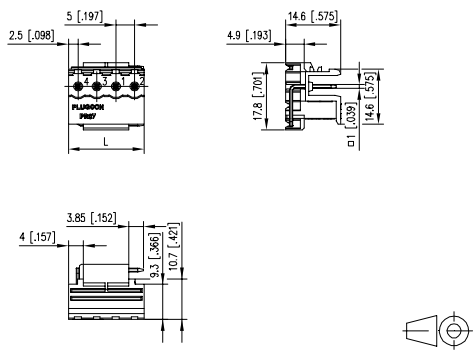

L = (Pole size - 1) * centerline + 5 mm (0.197 in.)

P/N
313381 ☐

Complete the part number by adding the pole size.

	02	03	04				

(Information: page 143)

Standard pole sizes

Product family	Pole size	Color	Option
PT04	5xx	H	B E C

Centerline Design Function

*(Type 029) *old product name

- pin header, solderable
- centerline 5.00 mm, direction of connection 90°
- open ends, fittable without loss of poles
- color black

Technical data

cULus V / A	300 / 10		
SEV 10 A / 250 V / 4 kV / 3 IEC 61984			
Overvoltage category	III	III	II
Pollution degree	3	2	2
Rated voltage	250 V	630 V	630 V
Rated test voltage	4.0 kV	4.0 kV	4 kV
Insulating material class	CTI 600		
Clearance and creepage distances	3.7 mm		
Solder pin dimension	1.0 mm		
Recommended pc board hole dia.	ø 1.3 mm		
Solder pin length	3.6 mm		
Protection category according to IEC 60529	IP 00		
Color	black		

Dimensional drawing

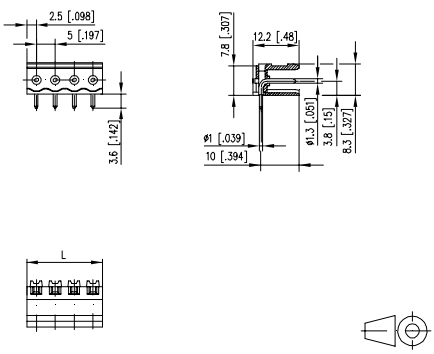

L = (Pole size - 1) * centerline + 5 mm (0.197 in.)

P/N
310291 ☐

Complete the part number by adding the pole size.

	02	03	04	05	06	07	08
09	10	11	12	13	14	15	16
17	18	19	20	21	22		

(Information: page 143)

Standard pole sizes

Terminal blocks

for PT045xxHBBN

Terminal blocks

for PT045xxHBVC

Product family	Pole size	Color	Option
PT04	5xx	H	B B N
Centerline	Design	Function	

*(Type 030)

*old product name

- pin header, solderable
- centerline 5.00 mm, direction of connection 90°
- closed ends
- color black

Technical data

cULus V / A	300 / 15		
SEV 10 A / 250 V / 4 kV / 3 IEC 61984			
Overvoltage category	III	III	II
Pollution degree	3	2	2
Rated voltage	250 V	630 V	630 V
Rated test voltage	4.0 kV	4.0 kV	4 kV
Insulating material class	CTI 600		
Clearance and creepage distances	3.7 mm		
Solder pin dimension	1.0 mm		
Recommended pc board hole dia.	ø 1.3 mm		
Solder pin length	3.6 mm		
Protection category according to IEC 60529	IP 00		
Color	black		

Dimensional drawing

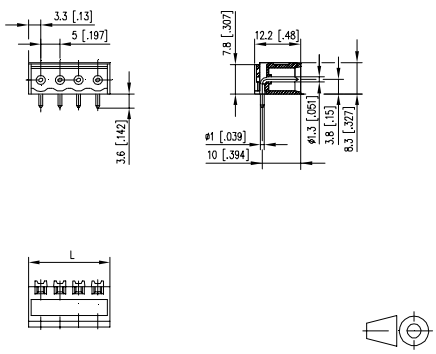

L = (Pole size - 1) * centerline + 6.6 mm (0.260 in.)

P/N

310301 ☐

Complete the part number by adding the pole size.

	02	03	04	05	06	07	08
09	10	11	12	13	14	15	16
17	18	19	20	21	22		

(Information: page 143)

Standard pole sizes

Product family	Pole size	Color	Option
PT04	5xx	H	B V C
Centerline	Design	Function	

*(Type 031)

*old product name

- pin header, solderable
- centerline 5.00 mm, direction of connection 90°
- open ends, fittable without loss of poles
- color black

Technical data

UL V / A	300 / 10		
SEV 10 A / 250 V / 4 kV / 3 IEC 61984			
Overvoltage category	III	III	II
Pollution degree	3	2	2
Rated voltage	250 V	630 V	630 V
Rated test voltage	4.0 kV	4.0 kV	4 kV
Insulating material class	CTI 600		
Clearance and creepage distances	3.7 mm		
Solder pin dimension	1.0 mm		
Recommended pc board hole dia.	ø 1.3 mm		
Solder pin length	2.9 mm		
Protection category according to IEC 60529	IP 00		
Color	black		

Dimensional drawing

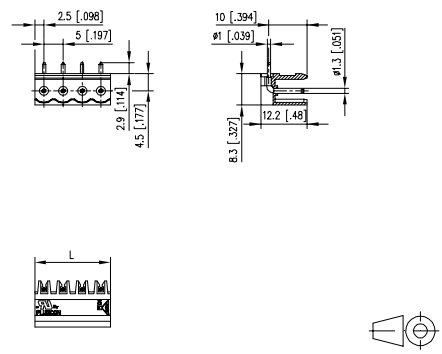

L = (Pole size - 1) * centerline + 5 mm (0.197 in.)

P/N

310311 ☐

Complete the part number by adding the pole size.

	02	03	04	05	06	07	08
09	10	11	12	13	14	15	16
17	18	19	20	21	22		

(Information: page 143)

Standard pole sizes

Terminal blocks

for PT055xxHBHC

Terminal blocks

for PT105xxHGDN

SEV Reg 130002

Product family	Pole size	Color	Option
PT05	5xx	H	B H C

Centerline / Design / Function

***(Type 039)** *old product name

- pin header, solderable
- centerline 5.00 mm, direction of connection 90°
- fittable without loss of poles
- color black
- Tape & Reel packaging

Technical data

V / A	300 / 15		
SEV Reg 130002 6 A / 250 V / 4 kV / 3 IEC 61984			
Overvoltage category	III	III	II
Pollution degree	3	2	2
Rated voltage	250 V	630 V	630 V
Rated test voltage	4.0 kV	4.0 kV	4 kV
Insulating material class	CTI 600		
Clearance and creepage distances	3.7 mm		
Solder pin dimension	1.0 mm		
Recommended pc board hole dia.	ø 1.3 mm		
Solder pin length	3.55 mm		
Protection category according to IEC 60529	IP 00		
Color	black		

Dimensional drawing

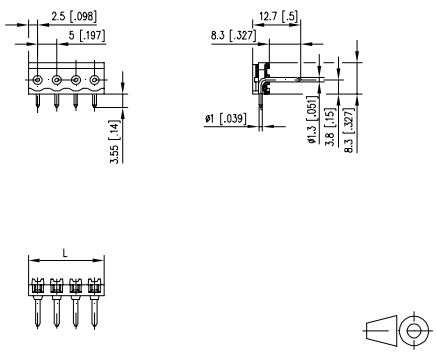

L = (Pole size - 1) * centerline + 5 mm (0.197 in.)

P/N **310391** ☐

Complete the part number by adding the pole size.

	02	03	04	05	06	07	08
09	10	11	12				

(Information: page 143)

Standard pole sizes

Product family	Pole size	Color	Option
PT10	5xx	H	G D N

Centerline / Design / Function

***(Type 280)** *old product name

- pin header, solderable
- centerline 5.00 mm, direction of connection 90°
- closed ends
- color green
- two rows, equal poles

Technical data

V / A	300 / 15		
13.5 A / 320 V / 4 kV / 3 IEC 61984			
Overvoltage category	III	III	II
Pollution degree	3	2	2
Rated voltage	320 V	800 V	800 V
Rated test voltage	4 kV	4.0 kV	4 kV
Insulating material class	CTI 600		
Clearance and creepage distances	4 mm		
Solder pin dimension	1.0 x 1.0 mm		
Recommended pc board hole dia.	ø 1.5 mm		
Solder pin length	3.5 mm		
Protection category according to IEC 60529	IP 00		
Color	green		

Dimensional drawing

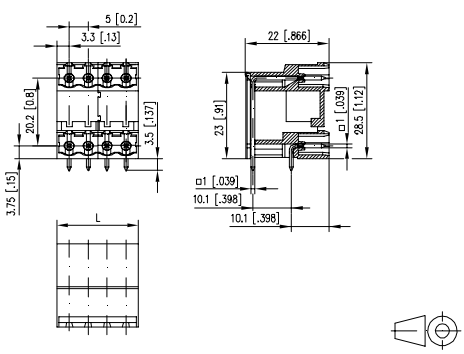

L = (Pole size - 1) * centerline + 6.6 mm (0.260 in.)

P/N **312801** ☐

Complete the part number by adding the pole size.

	04	06	08	10	12	14	16
18	20	22	24	26	28	30	32
34	36	38	40	42	44	46	48

(Information: page 143)

Standard pole sizes

Terminal blocks

for PT115xxHBEC

Accessories

for **PT115xxHBEC**

Terminal blocks

for PT115xxHBBN

Accessories

for **PT115xxHBBN**

Product family | Pole size | Color | Option

PT115xxHBEC *(Type 329)

Centerline | Design | Function | *old product name

- pin header, solderable
- centerline 5.00 mm, direction of connection 90°
- open ends, fittable without loss of poles
- color black
- codeable

Technical data

V / A	300 / 15		
13.5 A / 320 V / 4 kV / 3 IEC 61984			
Overvoltage category	III	III	II
Pollution degree	3	2	2
Rated voltage	320 V	800 V	800 V
Rated test voltage	4 kV	4.0 kV	4 kV
Insulating material class	CTI 600		
Clearance and creepage distances	4 mm		
Solder pin dimension	1.0 x 1.0 mm		
Recommended pc board hole dia.	ø 1.5 mm		
Solder pin length	3.45 mm		
Protection category according to IEC 60529	IP 00		
Color	black		

Dimensional drawing

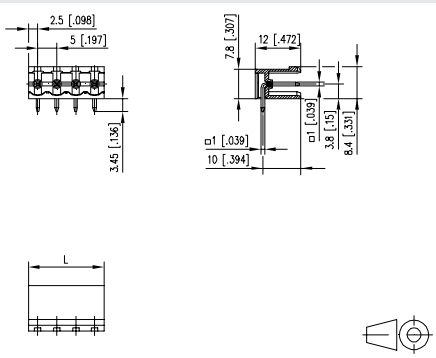

L = (Pole size - 1) * centerline + 5 mm (0.197 in.)

P/N

313291 ☐

Complete the part number by adding the pole size.

	02	03	04	05	06	07	08
09	10	11	12	13	14	15	16
17	18	19	20	21	22	23	24

(Information: page 143)

Standard pole sizes

Product family | Pole size | Color | Option

PT115xxHBBN *(Type 330)

Centerline | Design | Function | *old product name

- pin header, solderable
- centerline 5.00 mm, direction of connection 90°
- closed ends
- color black
- codeable

Technical data

V / A	300 / 15		
13.5 A / 320 V / 4 kV / 3 IEC 61984			
Overvoltage category	III	III	II
Pollution degree	3	2	2
Rated voltage	320 V	800 V	800 V
Rated test voltage	4 kV	4.0 kV	4 kV
Insulating material class	CTI 600		
Clearance and creepage distances	4 mm		
Solder pin dimension	1.0 x 1.0 mm		
Recommended pc board hole dia.	ø 1.5 mm		
Solder pin length	3.45 mm		
Protection category according to IEC 60529	IP 00		
Color	black		

Dimensional drawing

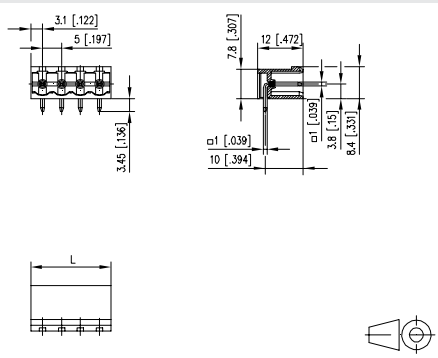

L = (Pole size - 1) * centerline + 6.2 mm (0.244 in.)

P/N

313301 ☐

Complete the part number by adding the pole size.

	02	03	04	05	06	07	08
09	10	11	12	13	14	15	16
17	18	19	20	21	22	23	24

(Information: page 143)

Standard pole sizes

Terminal blocks

for PT115xxHBBF

	Page
SP065xxVBNF	55
SP065xxVBPF	55
RP015xxVBLF (Type 351)	114

Accessories

for **PT115xxHBBF**

	Page
700024	297

Terminal blocks

for PT165xxHGDN

	Page
SP045xxVBNC (ASP045)	53
SP065xxVBNC	54
SP065xxVBPC	54
SP995xxVBNC	56
RP015xxVBLC (Type 349)	113
RP015xxSBLC (Type 350)	114
RP035xxHBLD (Type 314)	116

Product family | Pole size | Color | Option

PT115xxHBBF *(Type 336)

Centerline | Design | Function | *old product name

- pin header, solderable
- centerline 5.00 mm, direction of connection 90°
- closed ends
- color black, mounting flange
- codeable

Technical data

V / A	300 / 15		
13.5 A / 320 V / 4 kV / 3 IEC 61984			
Overvoltage category	III	III	II
Pollution degree	3	2	2
Rated voltage	320 V	800 V	800 V
Rated test voltage	4 kV	4.0 kV	4 kV
Insulating material class	CTI 600		
Clearance and creepage distances	4 mm		
Solder pin dimension	1.0 x 1.0 mm		
Recommended pc board hole dia.	ø 1.5 mm		
Solder pin length	3.45 mm		
Protection category according to IEC 60529	IP 00		
Color	black		

Dimensional drawing

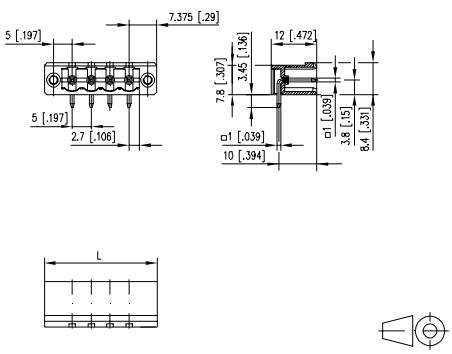

L = (Pole size - 1) * centerline + 14.75 mm (0.581 in.)

P/N

313361 ☐

Complete the part number by adding the pole size.

	02	03	04	05	06	07	08
09	10	11	12	13	14	15	16
17	18	19	20	21	22	23	24

(Information: page 143)

Standard pole sizes

Product family | Pole size | Color | Option

PT165xxHGDN *(Type 276)

Centerline | Design | Function | *old product name

- pin header, solderable
- centerline 5.00 mm, direction of connection 90°
- closed ends
- color green
- staggered pins, double stacked

Technical data

V / A	300 / 15		
13.5 A / 320 V / 4 kV / 3 IEC 61984			
Overvoltage category	III	III	II
Pollution degree	3	2	2
Rated voltage	320 V	800 V	800 V
Rated test voltage	4 kV	4.0 kV	4 kV
Insulating material class	CTI 600		
Clearance and creepage distances	4 mm		
Solder pin dimension	1.0 x 1.0 mm		
Recommended pc board hole dia.	ø 1.5 mm		
Solder pin length	3.5 mm		
Protection category according to IEC 60529	IP 00		
Color	green		

Dimensional drawing

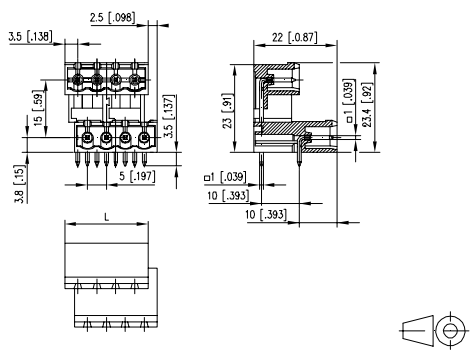

L = (Pole size - 1) * centerline + 7 mm (0.276 in.)

P/N

312761 ☐

Complete the part number by adding the pole size.

	04	06	08	10	12	14	16
18	20	22	24	26	28	30	32
34	36	38	40	42	44	46	48

(Information: page 143)

Standard pole sizes

Terminal blocks

for PR015xxVBHC

Terminal blocks

for PR015xxVBVC

THR 5.00 SEV Reg 130002

Product family	Pole size	Color	Option
PR015	xx	V	B H C

Centerline Design Function

*(Type 017)

*old product name

- pin header, THR solderable
- centerline 5.00 mm, direction of connection vertical 0°
- fittable without loss of poles
- color black
- Tape & Reel packaging

Technical data

V / A	300 / 15		
SEV Reg 130002	10 A / 250 V / 4 kV / 3	IEC 61984	
Overvoltage category	III	III	II
Pollution degree	3	2	2
Rated voltage	250 V	500 V	500 V
Rated test voltage	4.0 kV	4 kV	4.0 kV
Insulating material class	CTI 400		
Clearance and creepage distances	3.7 mm		
Solder pin dimension	1.0 mm		
Recommended pc board hole dia.	ø 1.3 mm		
Solder pin length	3.4 mm		
Protection category according to IEC 60529	IP 00		
Color	black		

Dimensional drawing

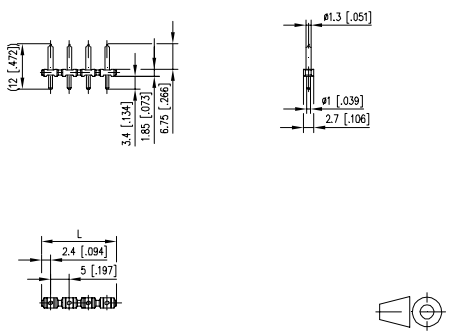

L = (Pole size - 1) * centerline + 4.8 mm (0.189 in.)

P/N

310171 ☐

Complete the part number by adding the pole size.

	02	03	04	05	06	07	08
09	10	11	12	13	14	15	16
17	18	19	20	21	22	23	24

(Information: page 143)

Standard pole sizes

THR 5.00 SEV Reg 130002

Product family	Pole size	Color	Option
PR015	xx	V	B V C

Centerline Design Function

*(Type 027)

*old product name

- pin header, THR solderable
- centerline 5.00 mm, direction of connection vertical 0°
- fittable without loss of poles
- color black
- Tape & Reel packaging

Technical data

V / A	300 / 15		
SEV Reg 130002	10 A / 250 V / 4 kV / 3	IEC 61984	
Overvoltage category	III	III	II
Pollution degree	3	2	2
Rated voltage	250 V	500 V	500 V
Rated test voltage	4.0 kV	4 kV	4.0 kV
Insulating material class	CTI 400		
Clearance and creepage distances	3.7 mm		
Solder pin dimension	1.0 mm		
Recommended pc board hole dia.	ø 1.3 mm		
Solder pin length	3.4 mm		
Protection category according to IEC 60529	IP 00		
Color	black		

Dimensional drawing

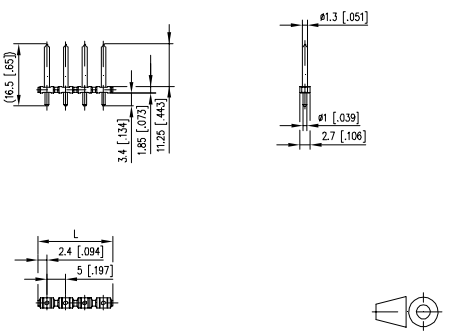

L = (Pole size - 1) * centerline + 4.8 mm (0.189 in.)

P/N

310271 ☐

Complete the part number by adding the pole size.

	02	03	04	05	06	07	08
09	10	11	12	13	14	15	16
17	18	19	20	21	22	23	24

(Information: page 143)

Standard pole sizes

Terminal blocks

Product family | Pole size | Color | Option

PM015xxVBHC *(Type 317)

Centerline | Design | Function | *old product name

- spring clamp terminal block, SMT solderable
- centerline 5.00 mm, direction of connection vertical 0°
- fittable without loss of poles
- color black
- Tape & Reel packaging

Technical data

V / A 300 / 10

Overvoltage category	III	III	II
Pollution degree	3	2	2
Rated voltage	160.0 V	320.0 V	320.0 V
Rated test voltage	2.5 kV	2.5 kV	2.5 kV
Insulating material class	CTI 400		
Clearance and creepage distances	2.5 mm		
Solder pin dimension	2.5 mm		
Protection category according to IEC 60529	IP 00		
Color	black		

Dimensional drawing

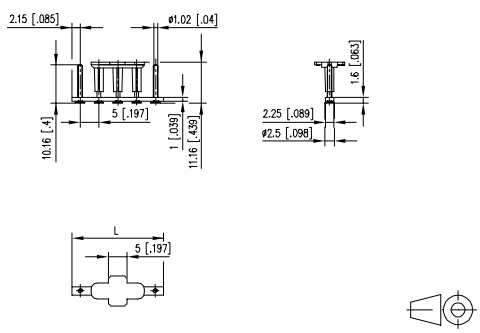

L = (Pole size - 1) * centerline + 4.3 mm (0.169 in.)

P/N
313171 ☐

Complete the part number by adding the pole size.

	02	03	06			

(Information: page 143)

Standard pole sizes

Product family | Pole size | Color | Option

PM025xxVBHC *(Type 318)

Centerline | Design | Function | *old product name

- pin header, SMT solderable
- centerline 5.00 mm, direction of connection vertical 0°
- fittable without loss of poles
- color black
- Tape & Reel packaging

Technical data

V / A 300 / 10

Overvoltage category	III	III	II
Pollution degree	3	2	2
Rated voltage	160 V	320 V	320 V
Rated test voltage	2.5 kV	2.5 kV	2.5 kV
Insulating material class	CTI 400		
Clearance and creepage distances	2.5 mm		
Solder pin dimension	2.5 mm		
Protection category according to IEC 60529	IP 00		
Color	black		

Dimensional drawing

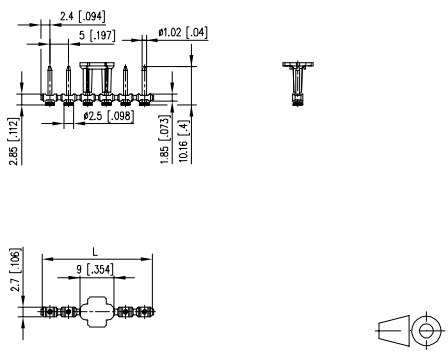

L = (Pole size - 1) * centerline + 4.8 mm (0.189 in.)

P/N
313181 ☐

Complete the part number by adding the pole size.

	02	03	04	05	06	07	08
09	10	11	12				

(Information: page 143)

Standard pole sizes

Terminal blocks

for PR035xxVBHC

Terminal blocks

for PR055xxVBHC

SEV Reg 130002

Product family | Pole size | Color | Option

PR035xxVBHC *(Type 046)

Centerline | Design | Function | *old product name

- pin header, THR solderable
- centerline 5.00 mm, direction of connection vertical 0°
- fittable without loss of poles
- color black
- Tape & Reel packaging

Technical data

V / A	300 / 10		
SEV Reg 130002	13.5 A / 250 V / 4 kV / 3	IEC 61984	
Overvoltage category	III	III	II
Pollution degree	3	2	2
Rated voltage	250 V	500 V	500 V
Rated test voltage	4.0 kV	4 kV	4.0 kV
Insulating material class	CTI 400		
Clearance and creepage distances	4 mm		
Solder pin dimension	1.0 mm		
Recommended pc board hole dia.	ø 1.3 mm		
Solder pin length	4.35 mm		
Protection category according to IEC 60529	IP 00		
Color	black		

Dimensional drawing

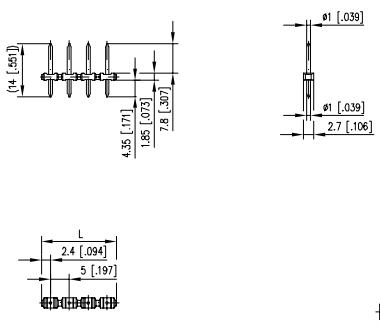

L = (Pole size - 1) * centerline + 4.8 mm (0.189 in.)

P/N

310461 ☐

Complete the part number by adding the pole size.

	02	03	04	05	06	07	08
09	10	11	12	13	14	15	16
17	18	19	20	21	22	23	24

(Information: page 143)

Standard pole sizes

SEV Reg 130002

Product family | Pole size | Color | Option

PR055xxVBHC *(Type 048)

Centerline | Design | Function | *old product name

- pin header, THR solderable
- centerline 5.00 mm, direction of connection vertical 0°
- fittable without loss of poles
- color black
- Tape & Reel packaging

Technical data

V / A	300 / 15		
SEV Reg 130002	13.5 A / 320 V / 4 kV / 3	IEC 61984	
Overvoltage category	III	III	II
Pollution degree	3	2	2
Rated voltage	250 V	500 V	500 V
Rated test voltage	4.0 kV	4 kV	4.0 kV
Insulating material class	CTI 400		
Clearance and creepage distances	4 mm		
Solder pin dimension	1.0 x 1.0 mm		
Recommended pc board hole dia.	ø 1.5 mm		
Solder pin length	4 mm		
Protection category according to IEC 60529	IP 00		
Color	black		

Dimensional drawing

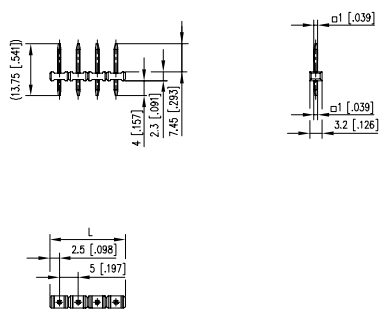

L = (Pole size - 1) * centerline + 5 mm (0.197 in.)

P/N

310481 ☐

Complete the part number by adding the pole size.

	02	03	04	05	06	07	08
09	10	11	12	13	14	15	16
17	18	19	20	21	22	23	24

(Information: page 143)

Standard pole sizes

Terminal blocks

for PR065xxVBEC

Accessories

for **PR065xxVBEC**

Terminal blocks

for PR065xxVBBN

Accessories

for **PR065xxVBBN**

Product family | Pole size | Color | Option

PR065xxVBEC *(Type 477)

Centerline | Design | Function | *old product name

- pin header, THR solderable
- centerline 5.00 mm, direction of connection vertical 0°
- open ends
- color black
- Tape & Reel packaging
- codeable

Technical data

cULus V / A	300 / 15		
SEV 13.5 A / 320 V / 4 kV / 3 IEC 61984			
Overvoltage category	III	III	II
Pollution degree	3	2	2
Rated voltage	320 V	800 V	800 V
Rated test voltage	4 kV	4.0 kV	4 kV
Insulating material class	CTI 600		
Clearance and creepage distances	4 mm		
Solder pin dimension	1.0 x 1.0 mm		
Recommended pc board hole dia.	ø 1.5 mm		
Solder pin length	3.25 mm		
Protection category according to IEC 60529	IP 00		
Color	black		

Dimensional drawing

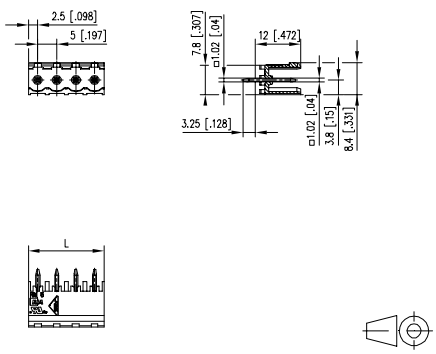

L = (Pole size - 1) * centerline + 5 mm (0.197 in.)

P/N

314771 ☐

Complete the part number by adding the pole size.

	02	03	04	05	06	07	08
09	10	11	12				

(Information: page 143)

Standard pole sizes

Product family | Pole size | Color | Option

PR065xxVBBN *(Type 177)

Centerline | Design | Function | *old product name

- pin header, THR solderable
- centerline 5.00 mm, direction of connection vertical 0°
- closed ends
- color black
- Tape & Reel packaging
- codeable

Technical data

cULus V / A	300 / 15		
SEV 13.5 A / 320 V / 4 kV / 3 IEC 61984			
Overvoltage category	III	III	II
Pollution degree	3	2	2
Rated voltage	320 V	800 V	800 V
Rated test voltage	4 kV	4.0 kV	4 kV
Insulating material class	CTI 600		
Clearance and creepage distances	4 mm		
Solder pin dimension	1.0 x 1.0 mm		
Recommended pc board hole dia.	ø 1.5 mm		
Solder pin length	3.25 mm		
Protection category according to IEC 60529	IP 00		
Color	black		

Dimensional drawing

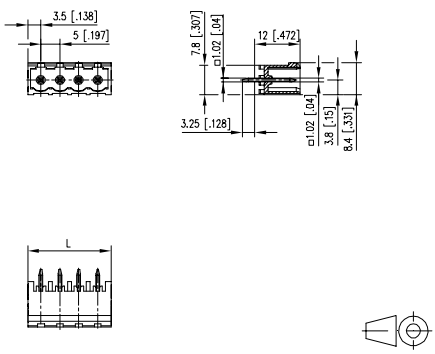

L = (Pole size - 1) * centerline + 7.0 mm (0.276 in.)

P/N

311771 ☐

Complete the part number by adding the pole size.

	02	03	04	05	06	07	08
09	10	11	12				

(Information: page 143)

Standard pole sizes

Terminal blocks

for PR065xxVBBF — Page

Accessories

Page

for **PR065xxVBBF**

Terminal blocks

for PM035xxVBHC — Page

Product family | Pole size | Color | Option

PR065xxVBBF *(Type 397)

Centerline | Design | Function | *old product name

- pin header, THR solderable
- centerline 5.00 mm, direction of connection vertical 0°
- closed ends
- color black, mounting flange
- Tape & Reel packaging
- codeable

Technical data

cULus V / A 300 / 15

SEV 13.5 A / 320 V / 4 kV / 3 IEC 61984

Overvoltage category	III	III	II
Pollution degree	3	2	2
Rated voltage	320 V	800 V	800 V
Rated test voltage	4 kV	4.0 kV	4 kV
Insulating material class	CTI 600		
Clearance and creepage distances	4 mm		
Solder pin dimension	1.0 x 1.0 mm		
Recommended pc board hole dia.	ø 1.5 mm		
Solder pin length	3.25 mm		
Protection category according to IEC 60529	IP 00		
Color	black		

Dimensional drawing

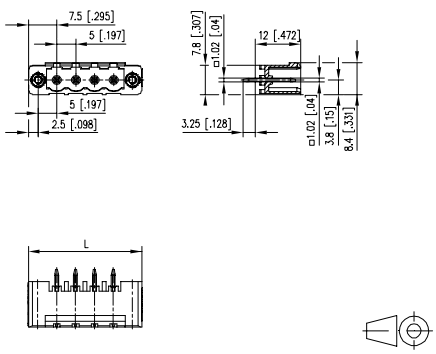

L = (Pole size - 1) * centerline + 7.0 mm (0.276 in.)

P/N

313971 □

Complete the part number by adding the pole size.

	02	03	04	05	06	07	08
09	10	11	12				

(Information: page 143)

Standard pole sizes

Product family | Pole size | Color | Option

PM035xxVBHC *(Type 417)

Centerline | Design | Function | *old product name

- pin header, SMT solderable
- centerline 5.00 mm, direction of connection vertical 0°
- fittable without loss of poles
- color black
- Tape & Reel packaging

Technical data

cULus V / A 300 / 15

Overvoltage category	III	III	II
Pollution degree	3	2	2
Rated voltage	160 V	320 V	320 V
Rated test voltage	2.5 kV	2.5 kV	2.5 kV
Insulating material class	CTI 400		
Clearance and creepage distances	2.5 mm		
Solder pin dimension	2.5 mm		
Protection category according to IEC 60529	IP 00		
Color	black		

Dimensional drawing

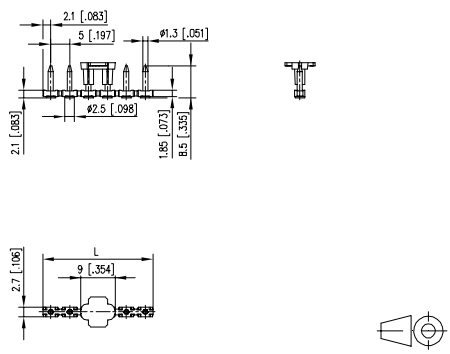

L = (Pole size - 1) * centerline + 4.8 mm (0.189 in.)

P/N

314171 □

Complete the part number by adding the pole size.

	02	03	04	05	06	07	08
09	10	11	12				

(Information: page 143)

Standard pole sizes

Terminal blocks

for PT045xxVBEC

Terminal blocks

for PT045xxVBBN

Product family | Pole size | Color | Option

PT045xxVBEC *(Type 019)

Centerline | Design | Function | *old product name

- pin header, solderable
- centerline 5.00 mm, direction of connection vertical 0°
- open ends, fittable without loss of poles
- color black

Technical data

V / A	300 / 15		
10 A / 250 V / 4 kV / 3 IEC 61984			
Overvoltage category	III	III	II
Pollution degree	3	2	2
Rated voltage	250 V	630 V	630 V
Rated test voltage	4.0 kV	4.0 kV	4 kV
Insulating material class	CTI 600		
Clearance and creepage distances	3.7 mm		
Solder pin dimension	1.0 mm		
Recommended pc board hole dia.	ø 1.3 mm		
Solder pin length	5.2 mm		
Protection category according to IEC 60529	IP 00		
Color	black		

Dimensional drawing

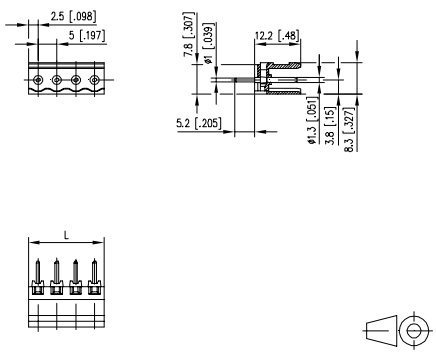

L = (Pole size - 1) * centerline + 5 mm (0.197 in.)

P/N

310191 ☐

Complete the part number by adding the pole size.

	02	03	04	05	06	07	08
09	10	11	12	13	14	15	16
17	18	19	20	21	22		

(Information: page 143)

Standard pole sizes

Product family | Pole size | Color | Option

PT045xxVBBN *(Type 020)

Centerline | Design | Function | *old product name

- pin header, solderable
- centerline 5.00 mm, direction of connection vertical 0°
- closed ends
- color black

Technical data

V / A	300 / 15		
10 A / 250 V / 4 kV / 3 IEC 61984			
Overvoltage category	III	III	II
Pollution degree	3	2	2
Rated voltage	250 V	630 V	630 V
Rated test voltage	4.0 kV	4.0 kV	4 kV
Insulating material class	CTI 600		
Clearance and creepage distances	3.7 mm		
Solder pin dimension	1.0 mm		
Recommended pc board hole dia.	ø 1.3 mm		
Solder pin length	5.2 mm		
Protection category according to IEC 60529	IP 00		
Color	black		

Dimensional drawing

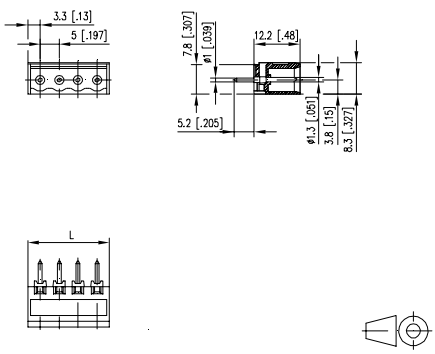

L = (Pole size - 1) * centerline + 6.6 mm (0.260 in.)

P/N

310201 ☐

Complete the part number by adding the pole size.

	02	03	04	05	06	07	08
09	10	11	12	13	14	15	16
17	18	19	20	21	22		

(Information: page 143)

Standard pole sizes

Terminal blocks

for PT065xxVBEN

Terminal blocks

for PT065xxVBVN

Product family | Pole size | Color | Option

PT065xxVBEN *(Type 041)

Centerline | Design | Function | *old product name

- pin header, solderable
- centerline 5.00 mm, direction of connection vertical 0°
- open ends, guiding rips
- color black

Technical data

cULus V / A	300 / 15		
SEV	10 A / 250 V / 4 kV / 3 IEC 61984		
Overvoltage category	III	III	II
Pollution degree	3	2	2
Rated voltage	250 V	630 V	630 V
Rated test voltage	4.0 kV	4.0 kV	4 kV
Insulating material class	CTI 600		
Clearance and creepage distances	3.7 mm		
Solder pin dimension	1.0 mm		
Recommended pc board hole dia.	ø 1.3 mm		
Solder pin length	3.35 mm		
Protection category according to IEC 60529	IP 00		
Color	black		

Dimensional drawing

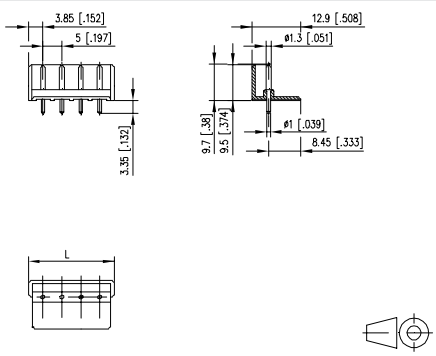

L = (Pole size - 1) * centerline + 7.7 mm (0.303 in.)

P/N

310411 ☐

Complete the part number by adding the pole size.

	02	03	04	05	06	07	08
09	10	11	12				

(Information: page 143)

Standard pole sizes

Product family | Pole size | Color | Option

PT065xxVBVN *(Type 042)

Centerline | Design | Function | *old product name

- pin header, solderable
- centerline 5.00 mm, direction of connection vertical 0°
- open ends, guiding rips
- color black

Technical data

cULus V / A	300 / 15		
SEV	10 A / 250 V / 4 kV / 3 IEC 61984		
Overvoltage category	III	III	II
Pollution degree	3	2	2
Rated voltage	250 V	630 V	630 V
Rated test voltage	4.0 kV	4.0 kV	4 kV
Insulating material class	CTI 600		
Clearance and creepage distances	3.7 mm		
Solder pin dimension	1.0 mm		
Recommended pc board hole dia.	ø 1.3 mm		
Solder pin length	3.35 mm		
Protection category according to IEC 60529	IP 00		
Color	black		

Dimensional drawing

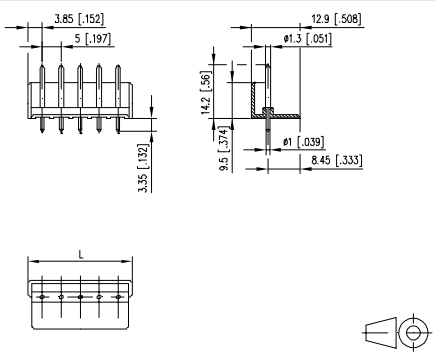

L = (Pole size - 1) * centerline + 7.7 mm (0.303 in.)

P/N

310421 ☐

Complete the part number by adding the pole size.

	02	03	04	05	06	07	08
09	10	11	12				

(Information: page 143)

Standard pole sizes

Terminal blocks

for PT105xxVGDN

Terminal blocks

for PT115xxVBEC

Accessories

for PT115xxVBEC	Page
700024	297

Product family | Pole size | Color | Option

PT105xxVGDN *(Type 278)

Centerline | Design | Function | *old product name

- pin header, solderable
- centerline 5.00 mm, direction of connection vertical 0°
- closed ends
- color green
- two rows, aligned

Technical data

V / A	300 / 15		
13.5 A / 320 V / 4 kV / 3 IEC 61984			
Overvoltage category	III	III	II
Pollution degree	3	2	2
Rated voltage	320 V	800 V	800 V
Rated test voltage	4 kV	4.0 kV	4 kV
Insulating material class	CTI 600		
Clearance and creepage distances	4 mm		
Solder pin dimension	1.0 x 1.0 mm		
Recommended pc board hole dia.	ø 1.5 mm		
Solder pin length	3.9 mm		
Protection category according to IEC 60529	IP 00		
Color	green		

Dimensional drawing

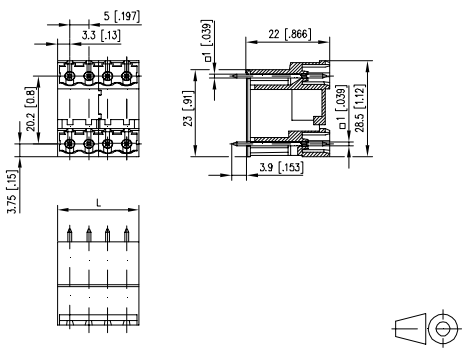

L = (Pole size - 1) * centerline + 6.6 mm (0.260 in.)

P/N

312781 ☐

Complete the part number by adding the pole size.

	04	06	08	10	12	14	16
18	20	22	24	26	28	30	32
34	36	38	40	42	44	46	48

(Information: page 143)

Standard pole sizes

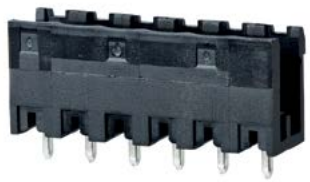

Product family | Pole size | Color | Option

PT115xxVBEC *(Type 319)

Centerline | Design | Function | *old product name

- pin header, solderable
- centerline 5.00 mm, direction of connection vertical 0°
- open ends, fittable without loss of poles
- color black
- codeable

Technical data

V / A	300 / 15		
13.5 A / 320 V / 4 kV / 3 IEC 61984			
Overvoltage category	III	III	II
Pollution degree	3	2	2
Rated voltage	320 V	800 V	800 V
Rated test voltage	4 kV	4.0 kV	4 kV
Insulating material class	CTI 600		
Clearance and creepage distances	4 mm		
Solder pin dimension	1.0 x 1.0 mm		
Recommended pc board hole dia.	ø 1.5 mm		
Solder pin length	3.25 mm		
Protection category according to IEC 60529	IP 00		
Color	black		

Dimensional drawing

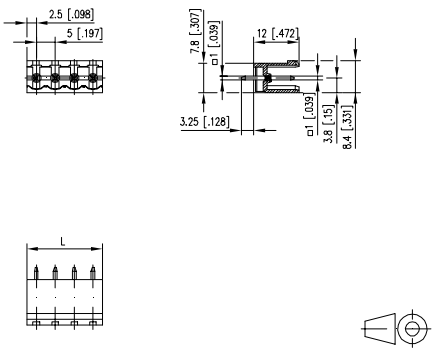

L = (Pole size - 1) * centerline + 5 mm (0.197 in.)

P/N

313191 ☐

Complete the part number by adding the pole size.

	02	03	04	05	06	07	08
09	10	11	12	13	14	15	16
17	18	19	20	21	22	23	24

(Information: page 143)

Standard pole sizes

Terminal blocks

Accessories

Terminal blocks

Accessories

Product family	Pole size	Color	Option	
PT115	xx	V	B	B N *(Type 320)
Centerline		Design	Function	*old product name

- pin header, solderable
- centerline 5.00 mm, direction of connection vertical 0°
- closed ends
- color black
- codeable

Technical data

cULus V / A	300 / 15		
SEV 13.5 A / 320 V / 4 kV / 3 IEC 61984			
Overvoltage category	III	III	II
Pollution degree	3	2	2
Rated voltage	320 V	800 V	800 V
Rated test voltage	4 kV	4.0 kV	4 kV
Insulating material class	CTI 600		
Clearance and creepage distances	4 mm		
Solder pin dimension	1.0 x 1.0 mm		
Recommended pc board hole dia.	ø 1.5 mm		
Solder pin length	3.25 mm		
Protection category according to IEC 60529	IP 00		
Color	black		

Dimensional drawing

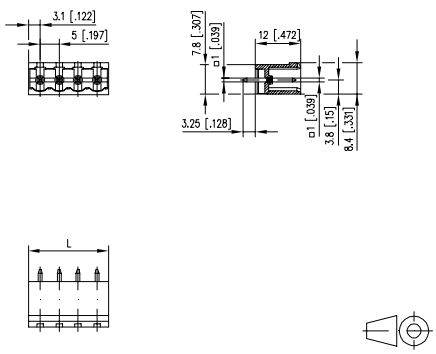

L = (Pole size - 1) * centerline + 6.2 mm (0.244 in.)

P/N

313201 ☐

Complete the part number by adding the pole size.

	02	03	04	05	06	07	08
09	10	11	12	13	14	15	16
17	18	19	20	21	22	23	24

(Information: page 143)

Standard pole sizes

Product family	Pole size	Color	Option	
PT115	xx	V	B	B F *(Type 335)
Centerline		Design	Function	*old product name

- pin header, solderable
- centerline 5.00 mm, direction of connection vertical 0°
- closed ends
- color black, mounting flange
- codeable

Technical data

cULus V / A	300 / 15		
SEV 13.5 A / 320 V / 4 kV / 3 IEC 61984			
Overvoltage category	III	III	II
Pollution degree	3	2	2
Rated voltage	320 V	800 V	800 V
Rated test voltage	4 kV	4.0 kV	4 kV
Insulating material class	CTI 600		
Clearance and creepage distances	4 mm		
Solder pin dimension	1.0 x 1.0 mm		
Recommended pc board hole dia.	ø 1.5 mm		
Solder pin length	3.25 mm		
Protection category according to IEC 60529	IP 00		
Color	black		

Dimensional drawing

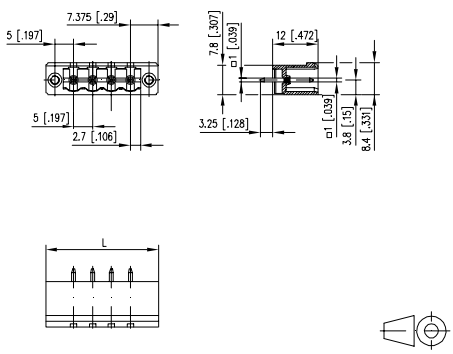

L = (Pole size - 1) * centerline + 14.75 mm (0.581 in.)

P/N

313351 ☐

Complete the part number by adding the pole size.

	02	03	04	05	06	07	08
09	10	11	12	13	14	15	16
17	18	19	20	21	22	23	24

(Information: page 143)

Standard pole sizes

Terminal blocks

for PT165xxVGDN

Terminal blocks

for PT175xxVGDN

Product family | Pole size | Color | Option

PT165xxVGDN *(Type 274)

Centerline | Design | Function | *old product name

- pin header, solderable
- centerline 5.00 mm, direction of connection vertical 0°
- closed ends
- color green
- staggered pins, double stacked

Technical data

cULus V / A	300 / 15		
SEV 13.5 A / 320 V / 4 kV / 3 IEC 61984			
Overvoltage category	III	III	II
Pollution degree	3	2	2
Rated voltage	320 V	800 V	800 V
Rated test voltage	4 kV	4.0 kV	4 kV
Insulating material class	CTI 600		
Clearance and creepage distances	4 mm		
Solder pin dimension	1.0 x 1.0 mm		
Recommended pc board hole dia.	ø 1.5 mm		
Solder pin length	3.9 mm		
Protection category according to IEC 60529	IP 00		
Color	green		

Dimensional drawing

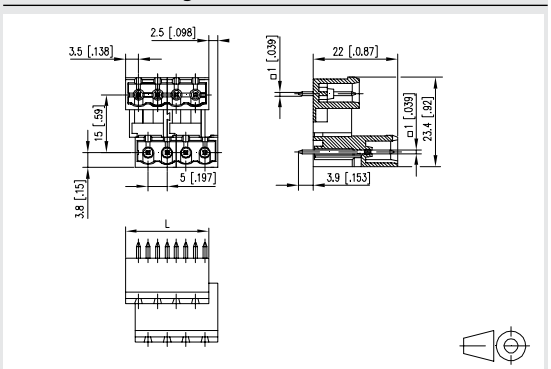

L = (Pole size - 1) * centerline + 7 mm (0.276 in.)

P/N

312741 ☐

Complete the part number by adding the pole size.

	04	06	08	10	12	14	16
18	20	22	24	26	28	30	32
34	36	38	40	42	44	46	48

(Information: page 143)

Standard pole sizes

Product family | Pole size | Color | Option

PT175xxVGDN *(Type 270)

Centerline | Design | Function | *old product name

- pin header, solderable
- centerline 5.00 mm, direction of connection vertical 0°
- closed ends
- color green
- staggered pins, double stacked

Technical data

cULus V / A	300 / 15		
Overvoltage category	III	III	II
Pollution degree	3	2	2
Rated voltage	320 V	800 V	800 V
Rated test voltage	4 kV	4.0 kV	4 kV
Insulating material class	CTI 600		
Clearance and creepage distances	4 mm		
Solder pin dimension	1.0 x 1.0 mm		
Recommended pc board hole dia.	ø 1.5 mm		
Solder pin length	3.9 mm		
Protection category according to IEC 60529	IP 00		
Color	green		

Dimensional drawing

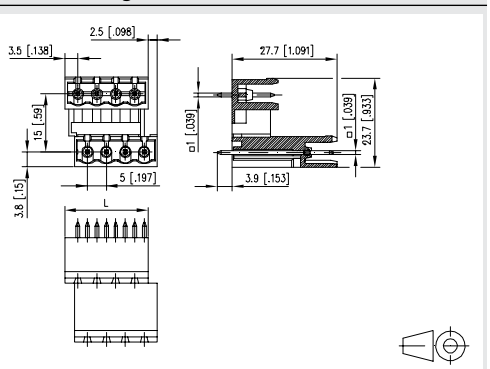

L = (Pole size - 1) * centerline + 7 mm (0.276 in.)

P/N

312701 ☐

Complete the part number by adding the pole size.

	04	06	08	10	12	14	16
18	20	22	24	26	28	30	32
34	36	38	40	42	44	46	48

(Information: page 143)

Standard pole sizes

Terminal blocks

for PR066xxHBEC

Accessories

for **PR066xxHBEC**

Terminal blocks

for PR066xxHBBN

Accessories

for **PR066xxHBBN**

Product family | Pole size | Color | Option

PR066xxHBEC *(Type 478)

Centerline | Design | Function | *old product name

- pin header, THR solderable
- centerline 5.08 mm, direction of connection 90°
- open ends
- color black
- Tape & Reel packaging
- codeable

Technical data

cULus V / A	300 / 15		
SEV 13.5 A / 320 V / 4 kV / 3 IEC 61984			
Overvoltage category	III	III	II
Pollution degree	3	2	2
Rated voltage	320 V	800 V	800 V
Rated test voltage	4 kV	4.0 kV	4 kV
Insulating material class	CTI 600		
Clearance and creepage distances	4.08 mm		
Solder pin dimension	1.0 x 1.0 mm		
Recommended pc board hole dia.	ø 1.5 mm		
Solder pin length	3.4 mm		
Protection category according to IEC 60529	IP 00		
Color	black		

Dimensional drawing

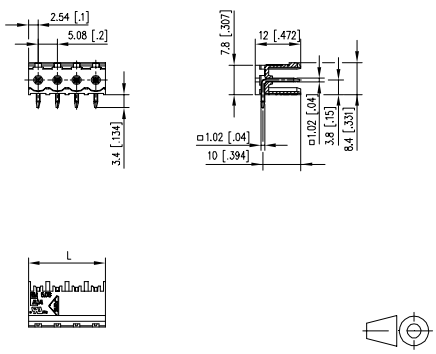

L = (Pole size - 1) * centerline + 5.08 mm (0.200 in.)

P/N

314781 □

Complete the part number by adding the pole size.

	02	03	04	05	06	07	08
09	10	11	12				

(Information: page 143)

Standard pole sizes

Product family | Pole size | Color | Option

PR066xxHBBN *(Type 178)

Centerline | Design | Function | *old product name

- pin header, THR solderable
- centerline 5.08 mm, direction of connection 90°
- closed ends
- color black
- Tape & Reel packaging
- codeable

Technical data

cULus V / A	300 / 15		
SEV 13.5 A / 320 V / 4 kV / 3 IEC 61984			
Overvoltage category	III	III	II
Pollution degree	3	2	2
Rated voltage	320 V	800 V	800 V
Rated test voltage	4 kV	4.0 kV	4 kV
Insulating material class	CTI 600		
Clearance and creepage distances	4.08 mm		
Solder pin dimension	1.0 x 1.0 mm		
Recommended pc board hole dia.	ø 1.5 mm		
Solder pin length	3.45 mm		
Protection category according to IEC 60529	IP 00		
Color	black		

Dimensional drawing

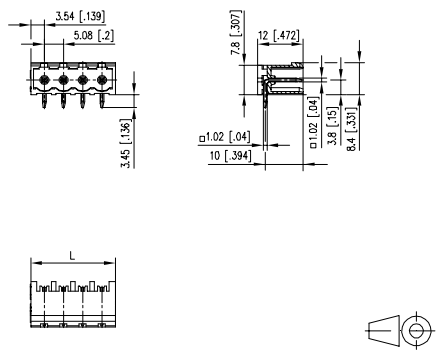

L = (Pole size - 1) * centerline + 7.08 mm (0.279 in.)

P/N

311781 □

Complete the part number by adding the pole size.

	02	03	04	05	06	07	08
09	10	11	12				

(Information: page 143)

Standard pole sizes

Terminal blocks

for PT106xxHGDN — Page

Terminal blocks

for PT116xxHBEC — Page

Accessories

for PT116xxHBEC — Page

Product family | Pole size | Color | Option

PT106xxHGDN *(Type 292)

Centerline | Design | Function | *old product name

- pin header, solderable
- centerline 5.08 mm, direction of connection 90°
- closed ends
- color green
- two rows, equal poles

Technical data

V / A	300 / 15		
13.5 A / 320 V / 4 kV / 3 IEC 61984			
Overvoltage category	III	III	II
Pollution degree	3	2	2
Rated voltage	320 V	800 V	800 V
Rated test voltage	4 kV	4.0 kV	4 kV
Insulating material class	CTI 600		
Clearance and creepage distances	4.08 mm		
Solder pin dimension	1.0 x 1.0 mm		
Recommended pc board hole dia.	ø 1.5 mm		
Solder pin length	3.5 mm		
Protection category according to IEC 60529	IP 00		
Color	green		

Dimensional drawing

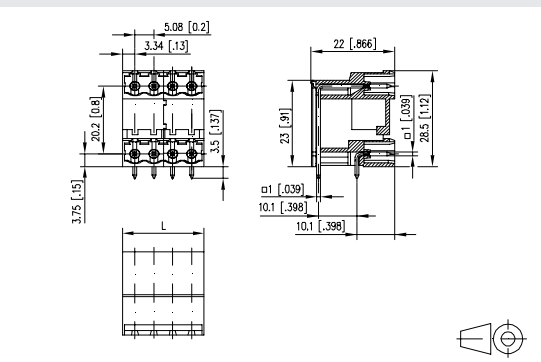

L = (Pole size - 1) * centerline + 6.68 mm (0.263 in.)

P/N
312921 ☐

Complete the part number by adding the pole size.

	04	06	08	10	12	14	16
18	20	22	24	26	28	30	32
34	36	38	40	42	44	46	48

(Information: page 143)

Standard pole sizes

Product family | Pole size | Color | Option

PT116xxHBEC *(Type 229)

Centerline | Design | Function | *old product name

- pin header, solderable
- centerline 5.08 mm, direction of connection 90°
- open ends, fittable without loss of poles
- color black
- codeable

Technical data

V / A	300 / 15		
13.5 A / 320 V / 4 kV / 3 IEC 61984			
Overvoltage category	III	III	II
Pollution degree	3	2	2
Rated voltage	320 V	800 V	800 V
Rated test voltage	4 kV	4.0 kV	4 kV
Insulating material class	CTI 600		
Clearance and creepage distances	4.08 mm		
Solder pin dimension	1.0 x 1.0 mm		
Recommended pc board hole dia.	ø 1.5 mm		
Solder pin length	3.45 mm		
Protection category according to IEC 60529	IP 00		
Color	black		

Dimensional drawing

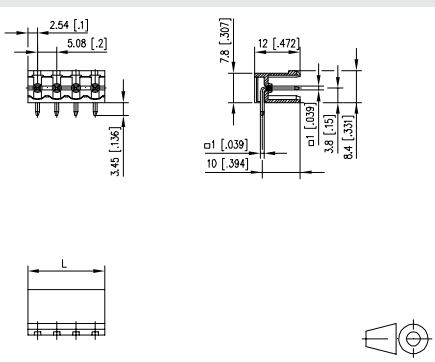

L = (Pole size - 1) * centerline + 4.98 mm (0.196 in.)

P/N
312291 ☐

Complete the part number by adding the pole size.

	02	03	04	05	06	07	08
09	10	11	12	13	14	15	16
17	18	19	20	21	22	23	24

(Information: page 143)

Standard pole sizes

Terminal blocks

for PT116xxHBBN

Accessories

for **PT116xxHBBN**

Terminal blocks

for PT116xxHBBF

Accessories

for **PT116xxHBBF**

Product family | Pole size | Color | Option

PT116xxHBBN *(Type 230)

Centerline | Design | Function | *old product name

- pin header, solderable
- centerline 5.08 mm, direction of connection 90°
- closed ends
- color black
- codeable

Technical data

cULus V / A 300 / 15

SEV 13.5 A / 320 V / 4 kV / 3 IEC 61984

Overvoltage category	III	III	II
Pollution degree	3	2	2
Rated voltage	320 V	800 V	800 V
Rated test voltage	4 kV	4.0 kV	4 kV
Insulating material class	CTI 600		
Clearance and creepage distances	4.08 mm		
Solder pin dimension	1.0 x 1.0 mm		
Recommended pc board hole dia.	ø 1.5 mm		
Solder pin length	3.45 mm		
Protection category according to IEC 60529	IP 00		
Color	black		

Dimensional drawing

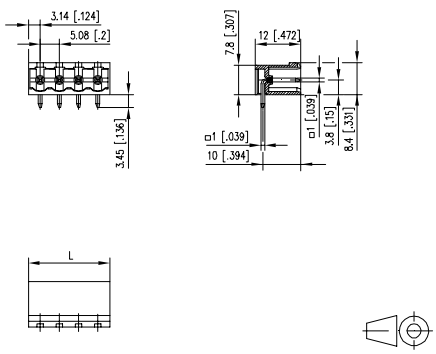

L = (Pole size - 1) * centerline + 6.28 mm (0.247 in.)

P/N

312301 □

Complete the part number by adding the pole size.

	02	03	04	05	06	07	08
09	10	11	12	13	14	15	16
17	18	19	20	21	22	23	24

(Information: page 143)

Standard pole sizes

Product family | Pole size | Color | Option

PT116xxHBBF *(Type 236)

Centerline | Design | Function | *old product name

- pin header, solderable
- centerline 5.08 mm, direction of connection 90°
- closed ends
- color black, mounting flange
- codeable

Technical data

cULus V / A 300 / 15

SEV 13.5 A / 320 V / 4 kV / 3 IEC 61984

Overvoltage category	III	III	II
Pollution degree	3	2	2
Rated voltage	320 V	800 V	800 V
Rated test voltage	4 kV	4.0 kV	4 kV
Insulating material class	CTI 600		
Clearance and creepage distances	4.08 mm		
Solder pin dimension	1.0 x 1.0 mm		
Recommended pc board hole dia.	ø 1.5 mm		
Solder pin length	3.45 mm		
Protection category according to IEC 60529	IP 00		
Color	black		

Dimensional drawing

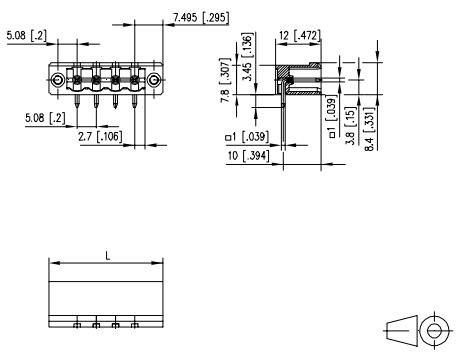

L = (Pole size - 1) * centerline + 14.99 mm (0.590 in.)

P/N

312361 □

Complete the part number by adding the pole size.

	02	03	04	05	06	07	08
09	10	11	12	13	14	15	16
17	18	19	20	21	22	23	24

(Information: page 143)

Standard pole sizes

Terminal blocks

for PT166xxHGDN

Terminal blocks

for PR016xxVBHC

Product family | Pole size | Color | Option

PT166xxHGDN *(Type 288)

Centerline | Design | Function | *old product name

- pin header, solderable
- centerline 5.08 mm, direction of connection 90°
- closed ends
- color green
- staggered pins, double stacked

Technical data

cULus V / A	300 / 15		
SEV 13.5 A / 320 V / 4 kV / 3 IEC 61984			
Overvoltage category	III	III	II
Pollution degree	3	2	2
Rated voltage	320 V	800 V	800 V
Rated test voltage	4 kV	4.0 kV	4 kV
Insulating material class	CTI 600		
Clearance and creepage distances	4.08 mm		
Solder pin dimension	1.0 x 1.0 mm		
Recommended pc board hole dia.	ø 1.5 mm		
Solder pin length	3.5 mm		
Protection category according to IEC 60529	IP 00		
Color	green		

Dimensional drawing

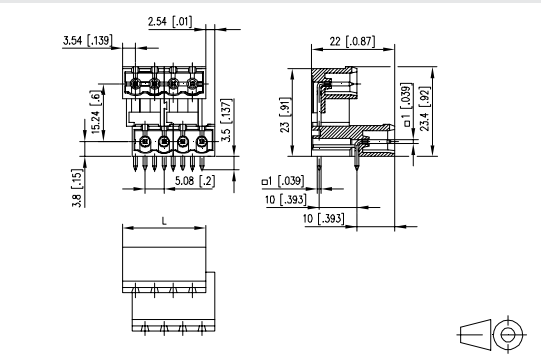

L = (Pole size - 1) * centerline + 7.08 mm (0.279 in.)

P/N

312881 □

Complete the part number by adding the pole size.

	04	06	08	10	12	14	16
18	20	22	24	26	28	30	32
34	36	38	40	42	44	46	48

(Information: page 143)

Standard pole sizes

SEV Reg 130002

Product family | Pole size | Color | Option

PR016xxVBHC *(Type 018)

Centerline | Design | Function | *old product name

- pin header, THR solderable
- centerline 5.08 mm, direction of connection vertical 0°
- fittable without loss of poles
- color black

Technical data

cULus V / A	300 / 15		
SEV Reg 130002 10 A / 250 V / 4 kV / 3 IEC 61984			
Overvoltage category	III	III	II
Pollution degree	3	2	2
Rated voltage	250 V	500 V	500 V
Rated test voltage	4.0 kV	4 kV	4.0 kV
Insulating material class	CTI 400		
Clearance and creepage distances	3.78 mm		
Solder pin dimension	1.0 mm		
Recommended pc board hole dia.	ø 1.3 mm		
Solder pin length	3.6 mm		
Protection category according to IEC 60529	IP 00		
Color	black		

Dimensional drawing

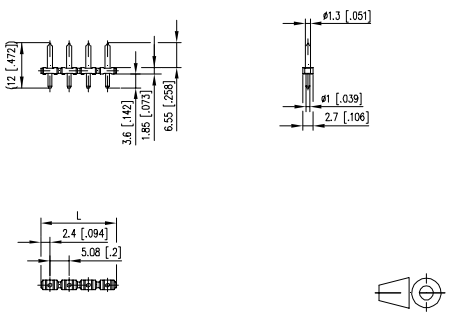

L = (Pole size - 1) * centerline + 4.8 mm (0.189 in.)

P/N

310181 □

Complete the part number by adding the pole size.

	02	03	04	05	06	07	08
09	10	11	12	13	14	15	16
17	18	19	20	21	22	23	24

(Information: page 143)

Standard pole sizes

Terminal blocks

for PR016xxVBVC — Page

RP026xxIBWU (Type 079) 118

Terminal blocks

for PM016xxVBHC — Page

RP026xxIBWU (Type 079) 118

THR 5.08 SEV Reg 130002

Product family	Pole size	Color	Option
PR016	xx	V	B V C

Centerline — Design — Function

*(Type 028) *old product name

- pin header, THR solderable
- centerline 5.08 mm, direction of connection vertical 0°
- fittable without loss of poles
- color black

Technical data

V / A	300 / 15		
SEV Reg 130002	10 A / 250 V / 4 kV / 3	IEC 61984	
Overvoltage category	III	III	II
Pollution degree	3	2	2
Rated voltage	250 V	500 V	500 V
Rated test voltage	4.0 kV	4 kV	4.0 kV
Insulating material class	CTI 400		
Clearance and creepage distances	3.78 mm		
Solder pin dimension	1.0 mm		
Recommended pc board hole dia.	ø 1.3 mm		
Solder pin length	3.4 mm		
Protection category according to IEC 60529	IP 00		
Color	black		

Dimensional drawing

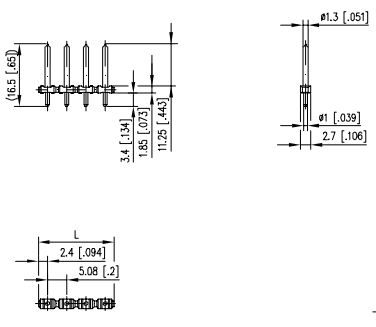

L = (Pole size - 1) * centerline + 4.8 mm (0.189 in.)

P/N

310281 ☐

Complete the part number by adding the pole size.

	02	03	04	05	06	07	08
09	10	11	12	13	14	15	16
17	18	19	20	21	22	23	24

(Information: page 143)

Standard pole sizes

* Approval pending

SMD 5.08

Product family	Pole size	Color	Option
PM016	xx	V	B H C

Centerline — Design — Function

- pin header, SMT solderable
- centerline 5.08 mm, direction of connection vertical 0°
- fittable without loss of poles
- color black
- Tape & Reel packaging

Technical data

V / A	130 / 10		
V / A	130 / 10		
Overvoltage category	III	III	II
Pollution degree	3	2	2
Rated voltage	160 V	320 V	320 V
Rated test voltage	2.5 kV	2.5 kV	2.5 kV
Insulating material class	CTI 400		
Clearance and creepage distances	2.5 mm		
Solder pin dimension	2.5 mm		
Protection category according to IEC 60529	IP 00		
Color	black		

Dimensional drawing

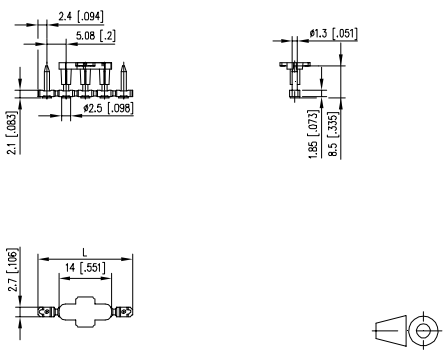

L = (Pole size - 1) * centerline + 4.8 mm (0.189 in.)

P/N

PM016 ☐ VBHC

Complete the part number by adding the pole size.

	02	03	04	05	06	07	08
09	10	11	12				

(Information: page 143)

Standard pole sizes

Terminal blocks

for PR066xxHBBF	Page
SP066xxVBNF	58
SP066xxVBPF	59
RP016xxVBLF (Type 251)	119

Accessories

for PR066xxHBBF	Page
700024	297

Terminal blocks

for PR066xxVBBF	Page
SP066xxVBNF	58

Accessories

for PR066xxVBBF	Page
700024	297

Product family | Pole size | Color | Option

PR066xxHBBF *(Type 398)

Centerline | Design | Function | *old product name

- pin header, THR solderable
- centerline 5.08 mm, direction of connection 90°
- closed ends
- color black, mounting flange
- Tape & Reel packaging
- codeable

Technical data

c UL us V / A	300 / 15		
SEV 13.5 A / 320 V / 4 kV / 3 IEC 61984			
Overvoltage category	III	III	II
Pollution degree	3	2	2
Rated voltage	320 V	800 V	800 V
Rated test voltage	4 kV	4.0 kV	4 kV
Insulating material class	CTI 600		
Clearance and creepage distances	4.08 mm		
Solder pin dimension	1.0 x 1.0 mm		
Recommended pc board hole dia.	ø 1.5 mm		
Solder pin length	3.45 mm		
Protection category according to IEC 60529	IP 00		
Color	black		

Dimensional drawing

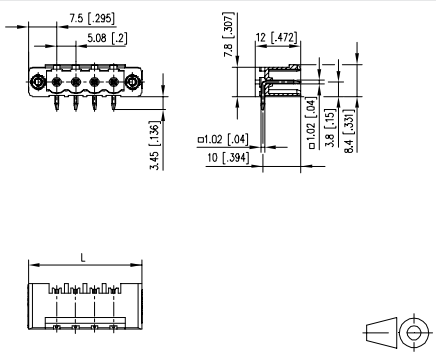

L = (Pole size - 1) * centerline + 7.08 mm (0.279 in.)

P/N
313981 ☐

Complete the part number by adding the pole size.

	02	03	04	05	06	07	08
09	10	11	12				

(Information: page 143)

Standard pole sizes

Product family | Pole size | Color | Option

PR066xxVBBF *(Type 399)

Centerline | Design | Function | *old product name

- pin header, THR solderable
- centerline 5.08 mm, direction of connection vertical 0°
- closed ends
- color black, mounting flange
- Tape & Reel packaging
- codeable

Technical data

c UL us V / A	300 / 15		
SEV 13.5 A / 320 V / 4 kV / 3 IEC 61984			
Overvoltage category	III	III	II
Pollution degree	3	2	2
Rated voltage	320 V	800 V	800 V
Rated test voltage	4 kV	4.0 kV	4 kV
Insulating material class	CTI 600		
Clearance and creepage distances	4.08 mm		
Solder pin dimension	1.0 x 1.0 mm		
Recommended pc board hole dia.	ø 1.5 mm		
Solder pin length	3.25 mm		
Protection category according to IEC 60529	IP 00		
Color	black		

Dimensional drawing

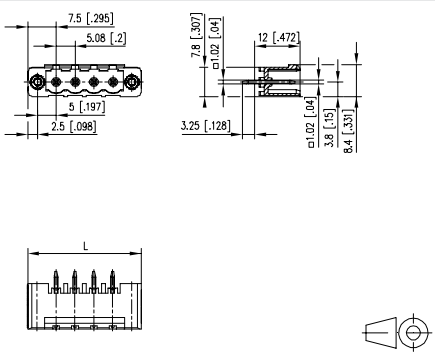

L = (Pole size - 1) * centerline + 7.08 mm (0.279 in.)

P/N
313991 ☐

Complete the part number by adding the pole size.

	02	03	04	05	06	07	08
09	10	11	12				

(Information: page 143)

Standard pole sizes

Terminal blocks

for PR066xxVBEC

Accessories

for **PR066xxVBEC**

Terminal blocks

for PR066xxVBBN

Accessories

for **PR066xxVBBN**

Product family	Pole size	Color	Option
PR066	xx	V	B E C
Centerline		Design	Function

PR066xxVBEC *(Type 479)

*old product name

- pin header, THR solderable
- centerline 5.08 mm, direction of connection vertical 0°
- open ends
- color black
- Tape & Reel packaging
- codeable

Technical data

cULus V / A	300 / 15		
SEV 13.5 A / 320 V / 4 kV / 3 IEC 61984			
Overvoltage category	III	III	II
Pollution degree	3	2	2
Rated voltage	320 V	800 V	800 V
Rated test voltage	4 kV	4.0 kV	4 kV
Insulating material class	CTI 600		
Clearance and creepage distances	4.08 mm		
Solder pin dimension	1.0 x 1.0 mm		
Recommended pc board hole dia.	ø 1.5 mm		
Solder pin length	3.25 mm		
Protection category according to IEC 60529	IP 00		
Color	black		

Dimensional drawing

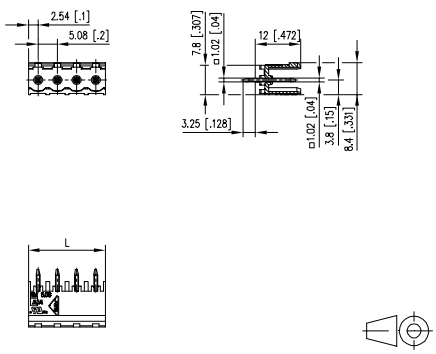

L = (Pole size - 1) * centerline + 5.08 mm (0.200 in.)

P/N

314791 □

Complete the part number by adding the pole size.

	02	03	04	05	06	07	08
09	10	11	12				

(Information: page 143)

Standard pole sizes

Product family	Pole size	Color	Option
PR066	xx	V	B B N
Centerline		Design	Function

PR066xxVBBN *(Type 179)

*old product name

- pin header, THR solderable
- centerline 5.08 mm, direction of connection vertical 0°
- closed ends
- color black
- Tape & Reel packaging
- codeable

Technical data

cULus V / A	300 / 15		
SEV 13.5 A / 320 V / 4 kV / 3 IEC 61984			
Overvoltage category	III	III	II
Pollution degree	3	2	2
Rated voltage	320 V	800 V	800 V
Rated test voltage	4 kV	4.0 kV	4 kV
Insulating material class	CTI 600		
Clearance and creepage distances	4.08 mm		
Solder pin dimension	1.0 x 1.0 mm		
Recommended pc board hole dia.	ø 1.5 mm		
Solder pin length	3.25 mm		
Protection category according to IEC 60529	IP 00		
Color	black		

Dimensional drawing

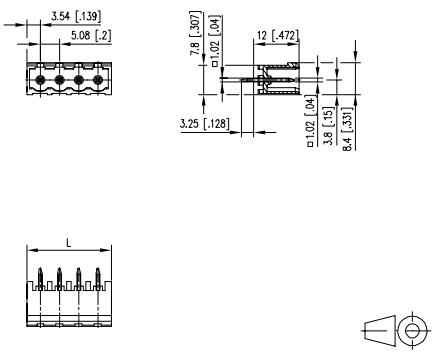

L = (Pole size - 1) * centerline + 7.08 mm (0.279 in.)

P/N

311791 □

Complete the part number by adding the pole size.

	02	03	04	05	06	07	08
09	10	11	12				

(Information: page 143)

Standard pole sizes

Terminal blocks

for PT106xxVGDN

Terminal blocks

for PT116xxVBEC

Accessories

for **PT116xxVBEC**

Product family	Pole size	Color	Option
PT10	6xx	V	GDN
Centerline		Design	Function

PT106xxVGDN *(Type 290)

*old product name

- pin header, solderable
- centerline 5.08 mm, direction of connection vertical 0°
- closed ends
- color green
- two rows, aligned

Technical data

c UL us V / A	300 / 15		
SEV 13.5 A / 320 V / 4 kV / 3 IEC 61984			
Overvoltage category	III	III	II
Pollution degree	3	2	2
Rated voltage	320 V	800 V	800 V
Rated test voltage	4 kV	4.0 kV	4 kV
Insulating material class	CTI 600		
Clearance and creepage distances	4.08 mm		
Solder pin dimension	1.0 x 1.0 mm		
Recommended pc board hole dia.	ø 1.5 mm		
Solder pin length	3.9 mm		
Protection category according to IEC 60529	IP 00		
Color	green		

Dimensional drawing

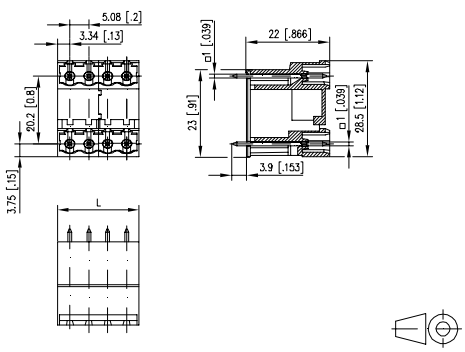

L = (Pole size - 1) * centerline + 6.68 mm (0.263 in.)

P/N

312901 ☐

Complete the part number by adding the pole size.

	04	06	08	10	12	14	16
18	20	22	24	26	28	30	32
34	36	38	40	42	44	46	48

(Information: page 143)

Standard pole sizes

Product family	Pole size	Color	Option
PT11	6xx	V	BEC
Centerline		Design	Function

PT116xxVBEC *(Type 219)

*old product name

- pin header, solderable
- centerline 5.08 mm, direction of connection vertical 0°
- open ends, fittable without loss of poles
- color black
- codeable

Technical data

c UL us V / A	300 / 15		
SEV 13.5 A / 320 V / 4 kV / 3 IEC 61984			
Overvoltage category	III	III	II
Pollution degree	3	2	2
Rated voltage	320 V	800 V	800 V
Rated test voltage	4 kV	4.0 kV	4 kV
Insulating material class	CTI 600		
Clearance and creepage distances	4.08 mm		
Solder pin dimension	1.0 x 1.0 mm		
Recommended pc board hole dia.	ø 1.5 mm		
Solder pin length	3.25 mm		
Protection category according to IEC 60529	IP 00		
Color	black		

Dimensional drawing

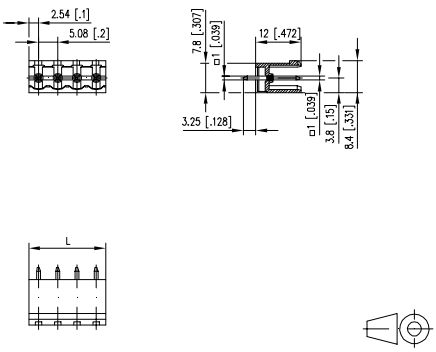

L = (Pole size - 1) * centerline + 4.98 mm (0.196 in.)

P/N

312191 ☐

Complete the part number by adding the pole size.

	02	03	04	05	06	07	08
09	10	11	12	13	14	15	16
17	18	19	20	21	22	23	24

(Information: page 143)

Standard pole sizes

Terminal blocks

Accessories

Terminal blocks

Accessories

Product family	Pole size	Color	Option	
PT11	6xx	V	B	B N *(Type 220)
Centerline		Design	Function	*old product name

- pin header, solderable
- centerline 5.08 mm, direction of connection vertical 0°
- closed ends
- color black
- codeable

Technical data

V / A	300 / 15		
13.5 A / 320 V / 4 kV / 3 IEC 61984			
Overvoltage category	III	III	II
Pollution degree	3	2	2
Rated voltage	320 V	800 V	800 V
Rated test voltage	4 kV	4.0 kV	4 kV
Insulating material class	CTI 600		
Clearance and creepage distances	4.08 mm		
Solder pin dimension	1.0 x 1.0 mm		
Recommended pc board hole dia.	ø 1.5 mm		
Solder pin length	3.25 mm		
Protection category according to IEC 60529	IP 00		
Color	black		

Dimensional drawing

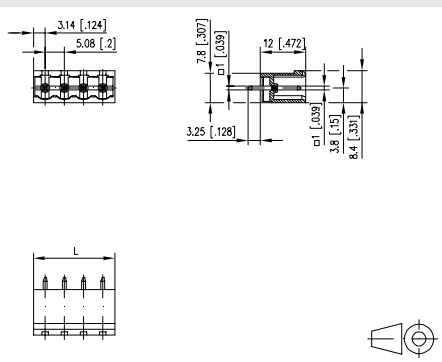

L = (Pole size - 1) * centerline + 6.28 mm (0.247 in.)

P/N

312201 □

Complete the part number by adding the pole size.

	02	03	04	05	06	07	08
09	10	11	12	13	14	15	16
17	18	19	20	21	22	23	24

(Information: page 143)

Standard pole sizes

Product family	Pole size	Color	Option	
PT11	6xx	V	B	B F *(Type 235)
Centerline		Design	Function	*old product name

- pin header, solderable
- centerline 5.08 mm, direction of connection vertical 0°
- closed ends
- color black, mounting flange
- codeable

Technical data

V / A	300 / 15		
13.5 A / 320 V / 4 kV / 3 IEC 61984			
Overvoltage category	III	III	II
Pollution degree	3	2	2
Rated voltage	320 V	800 V	800 V
Rated test voltage	4 kV	4.0 kV	4 kV
Insulating material class	CTI 600		
Clearance and creepage distances	4.08 mm		
Solder pin dimension	1.0 x 1.0 mm		
Recommended pc board hole dia.	ø 1.5 mm		
Solder pin length	3.25 mm		
Protection category according to IEC 60529	IP 00		
Color	black		

Dimensional drawing

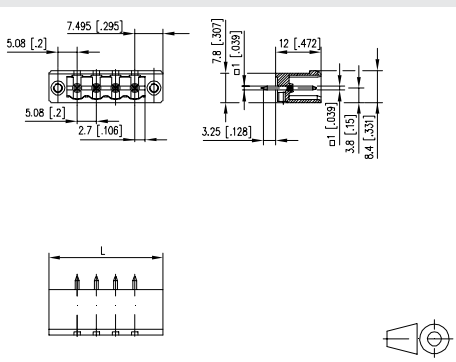

L = (Pole size - 1) * centerline + 14.99 mm (0.590 in.)

P/N

312351 □

Complete the part number by adding the pole size.

	02	03	04	05	06	07	08
09	10	11	12	13	14	15	16
17	18	19	20	21	22	23	24

(Information: page 143)

Standard pole sizes

Terminal blocks

Product family | Pole size | Color | Option

PT166xxVGDN *(Type 286)

Centerline | Design | Function | *old product name

- pin header, solderable
- centerline 5.08 mm, direction of connection vertical 0°
- closed ends
- color green
- staggered pins, double stacked

Technical data

cULus V / A	300 / 15		
SEV	13.5 A / 320 V / 4 kV / 3 IEC 61984		
Overvoltage category	III	III	II
Pollution degree	3	2	2
Rated voltage	320 V	800 V	800 V
Rated test voltage	4 kV	4.0 kV	4 kV
Insulating material class	CTI 600		
Clearance and creepage distances	4.08 mm		
Solder pin dimension	1.0 x 1.0 mm		
Recommended pc board hole dia.	ø 1.5 mm		
Solder pin length	3.9 mm		
Protection category according to IEC 60529	IP 00		
Color	green		

Dimensional drawing

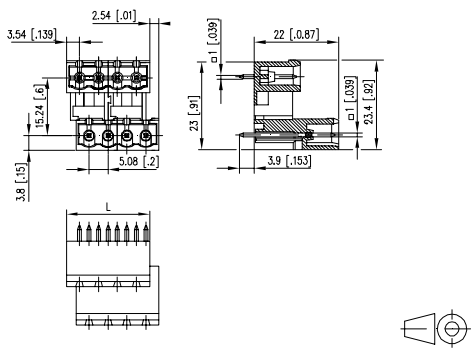

L = (Pole size - 1) * centerline + 7.08 mm (0.279 in.)

P/N

312861 ☐

Complete the part number by adding the pole size.

	04	06	08	10	12	14	16
18	20	22	24	26	28	30	32
34	36	38	40	42	44	46	48

(Information: page 143)

■ Standard pole sizes

Terminal blocks

for PT118xxHBEC — Page

RP018xxVBLC (Type 262) — 122

Accessories

Page

for **PT118xxHBEC**

700024 — 297

Terminal blocks

for PT118xxHBBC — Page

RP018xxVBLC (Type 262) — 122

Accessories

Page

for **PT118xxHBBC**

700024 — 297

Product family | Pole size | Color | Option

PT118xxHBEC *(Type 265)

Centerline | Design | Function | *old product name

- pin header, solderable
- centerline 7.62 mm, direction of connection 90°
- open ends, fittable without loss of poles
- color black
- codeable

Technical data

V / A / AWG	300 / 15 / 28 - 14		
13.5 A / 500 V / 6 kV / 3 IEC 61984			
Overvoltage category	III	III	II
Pollution degree	3	2	2
Rated voltage	500 V	1250 V	1250 V
Rated test voltage	6.0 kV	6.0 kV	6 kV
Insulating material class	CTI 600		
Clearance and creepage distances	6.6 mm		
Solder pin dimension	1.0 x 1.0 mm		
Recommended pc board hole dia.	ø 1.5 mm		
Solder pin length	3.45 mm		
Protection category according to IEC 60529	IP 00		
Color	black		

Dimensional drawing

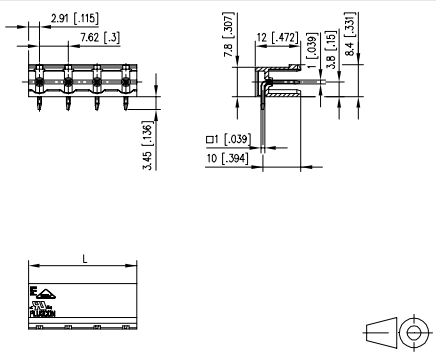

L = (Pole size - 1) * centerline + 5.82 mm (0.229 in.)

P/N

312651 ☐

Complete the part number by adding the pole size.

	02	03	04	05	06	07	08
09	10	11	12				

(Information: page 143)

Standard pole sizes

Product family | Pole size | Color | Option

PT118xxHBBC *(Type 266)

Centerline | Design | Function | *old product name

- pin header, solderable
- centerline 7.62 mm, direction of connection 90°
- closed ends
- color black
- codeable

Technical data

V / A / AWG	300 / 15 / 28 - 14		
13.5 A / 500 V / 6 kV / 3 IEC 61984			
Overvoltage category	III	III	II
Pollution degree	3	2	2
Rated voltage	500 V	1250 V	1250 V
Rated test voltage	6.0 kV	6.0 kV	6 kV
Insulating material class	CTI 600		
Clearance and creepage distances	6.6 mm		
Solder pin dimension	1.0 x 1.0 mm		
Recommended pc board hole dia.	ø 1.5 mm		
Solder pin length	3.45 mm		
Protection category according to IEC 60529	IP 00		
Color	black		

Dimensional drawing

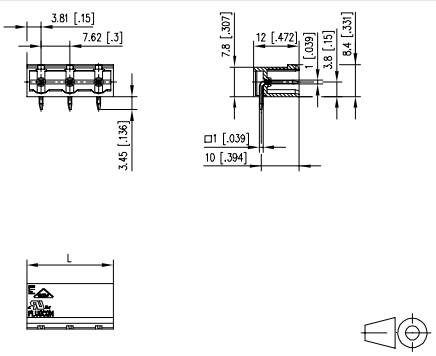

L = (Pole size - 1) * centerline + 7.62 mm (0.300 in.)

P/N

312661 ☐

Complete the part number by adding the pole size.

	02	03	04	05	06	07	08
09	10	11	12				

(Information: page 143)

Standard pole sizes

Terminal blocks

for PT118xxVBEC — Page

RP018xxVBLC (Type 262) 122

Accessories

Page

for **PT118xxVBEC**

700024 297

Terminal blocks

for PT118xxVBBC — Page

RP018xxVBLC (Type 262) 122

Accessories

Page

for **PT118xxVBBC**

700024 297

Product family | Pole size | Color | Option

PT118xxVBEC *(Type 263)

Centerline | Design | Function | *old product name

- pin header, solderable
- centerline 7.62 mm, direction of connection vertical 0°
- open ends, fittable without loss of poles
- color black
- codeable

Technical data

V / A / AWG	300 / 15 / 28 - 14		
13.5 A / 500 V / 6 kV / 3 IEC 61984			
Overvoltage category	III	III	II
Pollution degree	3	2	2
Rated voltage	500 V	1250 V	1250 V
Rated test voltage	6.0 kV	6.0 kV	6 kV
Insulating material class	CTI 600		
Clearance and creepage distances	6.6 mm		
Solder pin dimension	1.0 x 1.0 mm		
Recommended pc board hole dia.	ø 1.5 mm		
Solder pin length	3.25 mm		
Protection category according to IEC 60529	IP 00		
Color	black		

Dimensional drawing

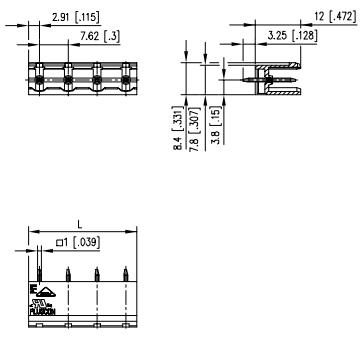

L = (Pole size - 1) * centerline + 5.82 mm (0.229 in.)

P/N

312631 □

Complete the part number by adding the pole size.

	02	03	04	05	06	07	08
09	10	11	12				

(Information: page 143)

Standard pole sizes

Product family | Pole size | Color | Option

PT118xxVBBC *(Type 264)

Centerline | Design | Function | *old product name

- pin header, solderable
- centerline 7.62 mm, direction of connection vertical 0°
- closed ends
- color black
- codeable

Technical data

V / A / AWG	300 / 15 / 28 - 14		
13.5 A / 500 V / 6 kV / 3 IEC 61984			
Overvoltage category	III	III	II
Pollution degree	3	2	2
Rated voltage	500 V	1250 V	1250 V
Rated test voltage	6.0 kV	6.0 kV	6 kV
Insulating material class	CTI 600		
Clearance and creepage distances	6.6 mm		
Solder pin dimension	1.0 x 1.0 mm		
Recommended pc board hole dia.	ø 1.5 mm		
Solder pin length	3.25 mm		
Protection category according to IEC 60529	IP 00		
Color	black		

Dimensional drawing

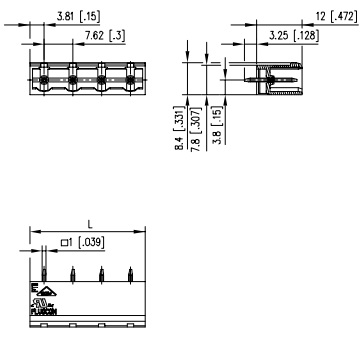

L = (Pole size - 1) * centerline + 7.62 mm (0.300 in.)

P/N

312641 □

Complete the part number by adding the pole size.

	02	03	04	05	06	07	08
09	10	11	12				

(Information: page 143)

Standard pole sizes

Terminal blocks

for PT049xxHBBN	Page
RP019xxWBLC (Type 049)	123

Product family | Pole size | Color | Option

PT049xxHBVC *(Type 031)

Centerline | Design | Function | *old product name

- pin header, solderable
- centerline 10.00 mm, direction of connection 90°
- open ends, fittable without loss of poles
- color black

Technical data

V / A 600 / 10

10 A / 630 V / 6 kV / 3 IEC 61984

Overvoltage category	III	III	II
Pollution degree	3	2	2
Rated voltage	630 V	1600 V	1600 V
Rated test voltage	8.0 kV	8 kV	8.0 kV
Insulating material class	CTI 600		
Clearance and creepage distances	8.7 mm		
Solder pin dimension	1.0 mm		
Recommended pc board hole dia.	ø 1.3 mm		
Solder pin length	2.9 mm		
Protection category according to IEC 60529	IP 00		
Color	black		

Dimensional drawing

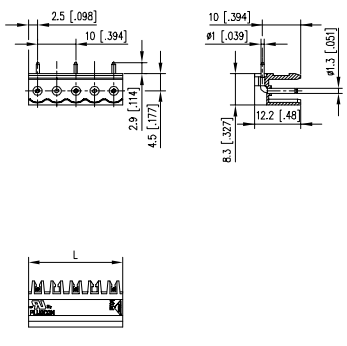

L = (Pole size - 1) * centerline + 5 mm (0.197 in.)

P/N

310312 ☐

Complete the part number by adding the pole size.

	02	03	04	05	06	07	08
09	10	11					

(Information: page 143)

Standard pole sizes

Product family | Pole size | Color | Option

PT049xxHBBN *(Type 030)

Centerline | Design | Function | *old product name

- pin header, solderable
- centerline 10.00 mm, direction of connection 90°
- closed ends
- color black

Technical data

V / A 600 / 15

10 A / 630 V / 6 kV / 3 IEC 61984

Overvoltage category	III	III	II
Pollution degree	3	2	2
Rated voltage	630 V	1600 V	1600 V
Rated test voltage	8.0 kV	8 kV	8.0 kV
Insulating material class	CTI 600		
Clearance and creepage distances	8.7 mm		
Solder pin dimension	1.0 mm		
Recommended pc board hole dia.	ø 1.3 mm		
Solder pin length	3.6 mm		
Protection category according to IEC 60529	IP 00		
Color	black		

Dimensional drawing

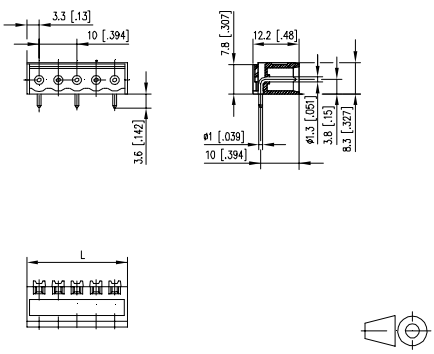

L = (Pole size - 1) * centerline + 6.6 mm (0.260 in.)

P/N

310302 ☐

Complete the part number by adding the pole size.

	02	03	04	05	06	07	08
09	10	11					

(Information: page 143)

Standard pole sizes

Terminal blocks

for PT119xxHBBF — Page

- SP129xxVBNF (ASP129) 60
- RP019xxVBLF (Type 351) 125

Accessories

Page

for **PT119xxHBBF**

700024 297

Terminal blocks

for PT069xxVBVN — Page

- RP029xxIBWC (Type 007) 123

Product family	Pole size	Color	Option
PT11	9xx	H	B B F
Centerline	Design	Function	

*(Type 336) *old product name

- pin header, solderable
- centerline 10.00 mm, direction of connection 90°
- closed ends
- color black, mounting flange

Technical data

cULus V / A	600 / 15		
SEV	13.5 A / 630 V / 6 kV / 3 IEC 61984		
Overvoltage category	III	III	II
Pollution degree	3	2	2
Rated voltage	630 V	1600 V	1600 V
Rated test voltage	8.0 kV	8 kV	8.0 kV
Insulating material class	CTI 600		
Clearance and creepage distances	9 mm		
Solder pin dimension	1.0 x 1.0 mm		
Recommended pc board hole dia.	ø 1.5 mm		
Solder pin length	3.45 mm		
Protection category according to IEC 60529	IP 00		
Color	black		

Dimensional drawing

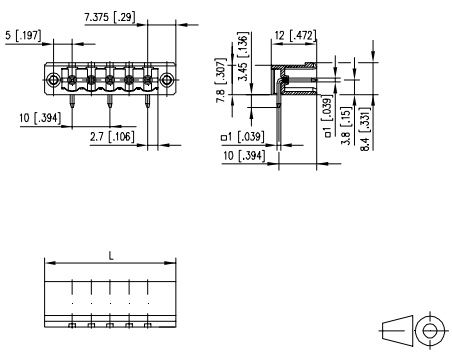

L = (Pole size - 1) * centerline + 14.75 mm (0.581 in.)

P/N **313362** □

Complete the part number by adding the pole size.

	02	03	04	05	06	07	08
09	10	11	12				

(Information: page 143)

Standard pole sizes

Product family	Pole size	Color	Option
PT06	9xx	V	B V N
Centerline	Design	Function	

*(Type 042) *old product name

- pin header, solderable
- centerline 10.00 mm, direction of connection vertical 0°
- open ends, guiding rips
- color black

Technical data

cULus V / A	600 / 15		
SEV	10 A / 630 V / 6 kV / 3 IEC 61984		
Overvoltage category	III	III	II
Pollution degree	3	2	2
Rated voltage	630 V	1600 V	1600 V
Rated test voltage	8.0 kV	8 kV	8.0 kV
Insulating material class	CTI 600		
Clearance and creepage distances	8.7 mm		
Solder pin dimension	1.0 mm		
Recommended pc board hole dia.	ø 1.3 mm		
Solder pin length	3.35 mm		
Protection category according to IEC 60529	IP 00		
Color	black		

Dimensional drawing

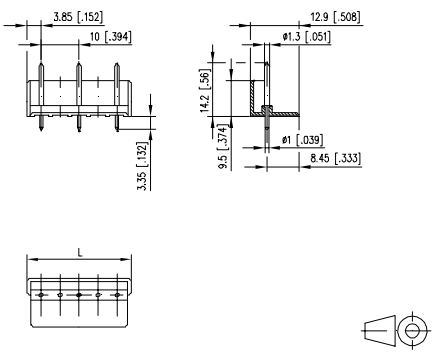

L = (Pole size - 1) * centerline + 7.7 mm (0.303 in.)

P/N **310422** □

Complete the part number by adding the pole size.

	02	03	04	05	06		

(Information: page 143)

Standard pole sizes

Terminal blocks

for PT049xxVBBN — Page

- RP019xxWBLC (Type 049) 123

Terminal blocks

for PT119xxVBBN — Page

- SP049xxVBNC (ASP049) 60
- RP039xxHBLC (Type 313) 124
- RP019xxVBLC (Type 349) 124

Accessories

Page

for **PT119xxVBBN**

700024 297

Product family | Pole size | Color | Option

PT049xxVBBN *(Type 020)

Centerline | Design | Function | *old product name

- pin header, solderable
- centerline 10.00 mm, direction of connection vertical 0°
- closed ends
- color black

Technical data

V / A	600 / 15		
10 A / 630 V / 6 kV / 3 IEC 61984			
Overvoltage category	III	III	II
Pollution degree	3	2	2
Rated voltage	630 V	1600 V	1600 V
Rated test voltage	8.0 kV	8 kV	8.0 kV
Insulating material class	CTI 600		
Clearance and creepage distances	8.7 mm		
Solder pin dimension	1.0 mm		
Recommended pc board hole dia.	ø 1.3 mm		
Solder pin length	5.2 mm		
Protection category according to IEC 60529	IP 00		
Color	black		

Dimensional drawing

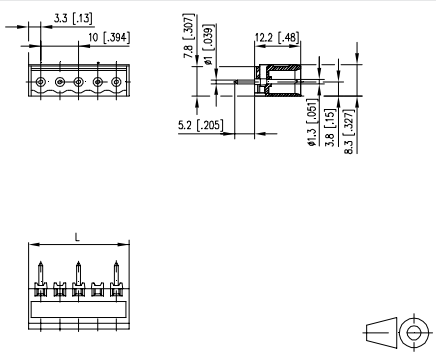

L = (Pole size - 1) * centerline + 6.6 mm (0.260 in.)

P/N

310202 ☐

Complete the part number by adding the pole size.

	02	03	04	05	06	07	08
09	10	11					

(Information: page 143)

Standard pole sizes

Product family | Pole size | Color | Option

PT119xxVBBN *(Type 320)

Centerline | Design | Function | *old product name

- pin header, solderable
- centerline 10.00 mm, direction of connection vertical 0°
- closed ends
- color black

Technical data

V / A	600 / 15		
13.5 A / 630 V / 6 kV / 3 IEC 61984			
Overvoltage category	III	III	II
Pollution degree	3	2	2
Rated voltage	630 V	1600 V	1600 V
Rated test voltage	8.0 kV	8 kV	8.0 kV
Insulating material class	CTI 600		
Clearance and creepage distances	9 mm		
Solder pin dimension	1.0 x 1.0 mm		
Recommended pc board hole dia.	ø 1.5 mm		
Solder pin length	3.25 mm		
Protection category according to IEC 60529	IP 00		
Color	black		

Dimensional drawing

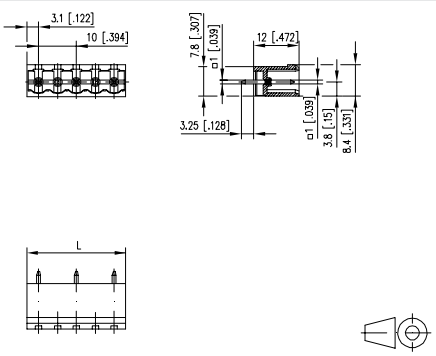

L = (Pole size - 1) * centerline + 6.2 mm (0.244 in.)

P/N

313202 ☐

Complete the part number by adding the pole size.

	02	03	04	05	06	07	08
09	10	11	12				

(Information: page 143)

Standard pole sizes

Terminal blocks

for PT119xxVBBF	Page
SP129xxVBNF (ASP129)	60
RP019xxVBLF (Type 351)	125

Accessories

for **PT119xxVBBF**	Page
700024	297

Product family	Pole size	Color	Option
PT119	xx	V	B B F
Centerline		Design	Function

***(Type 335)**

*old product name

- pin header, solderable
- centerline 10.00 mm, direction of connection vertical 0°
- closed ends
- color black, mounting flange

Technical data

c UL us V / A	600 / 15		
SEV 13.5 A / 630 V / 6 kV / 3 IEC 61984			
Overvoltage category	III	III	II
Pollution degree	3	2	2
Rated voltage	630 V	1600 V	1600 V
Rated test voltage	8.0 kV	8 kV	8.0 kV
Insulating material class	CTI 600		
Clearance and creepage distances	9 mm		
Solder pin dimension	1.0 x 1.0 mm		
Recommended pc board hole dia.	ø 1.5 mm		
Solder pin length	3.25 mm		
Protection category according to IEC 60529	IP 00		
Color	black		

Dimensional drawing

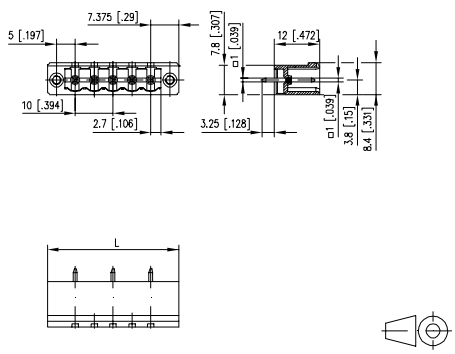

L = (Pole size - 1) * centerline + 14.75 mm (0.581 in.)

P/N

313352 ☐

Complete the part number by adding the pole size.

	02	03	04	05	06	07	08
09	10	11	12				

(Information: page 143)

Standard pole sizes

Terminal blocks

for PT11AxxHBEC	Page
SP04AxxVBNC (ASP04A)	61
RP01AxxVBLC (Type 249)	126
RP03AxxHBLC (Type 213)	127
RP03AxxHBLD (Type 214)	127

Accessories

for PT11AxxHBEC	Page
700024	297

Terminal blocks

for PT11AxxHBBN	Page
SP04AxxVBNC (ASP04A)	61
RP01AxxVBLC (Type 249)	126
RP03AxxHBLC (Type 213)	127
RP03AxxHBLD (Type 214)	127

Accessories

for PT11AxxHBBN	Page
700024	297

Product family	Pole size	Color	Option
PT11	AxxH	B	E C
Centerline	Design	Function	

PT11AxxHBEC *(Type 229)

*old product name

- pin header, solderable
- centerline 10.16 mm, direction of connection 90°
- open ends, fittable without loss of poles
- color black

Technical data

V / A	600 / 15		
13.5 A / 630 V / 6 kV / 3 IEC 61984			
Overvoltage category	III	III	II
Pollution degree	3	2	2
Rated voltage	630 V	1600 V	1600 V
Rated test voltage	8.0 kV	8 kV	8.0 kV
Insulating material class	CTI 600		
Clearance and creepage distances	9.18 mm		
Solder pin dimension	1.0 x 1.0 mm		
Recommended pc board hole dia.	ø 1.5 mm		
Solder pin length	3.45 mm		
Protection category according to IEC 60529	IP 00		
Color	black		

Dimensional drawing

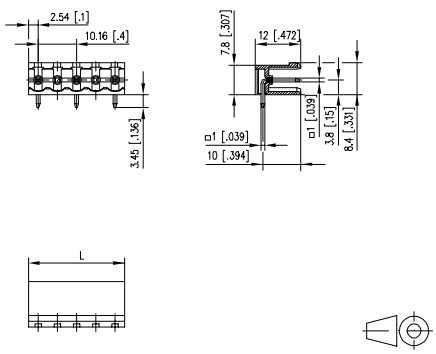

L = (Pole size - 1) * centerline + 5.08 mm (0.200 in.)

P/N

312292 ☐

Complete the part number by adding the pole size.

	02	03	04	05	06	07	08
09	10	11	12				

(Information: page 143)

Standard pole sizes

Product family	Pole size	Color	Option
PT11	AxxH	B	B N
Centerline	Design	Function	

PT11AxxHBBN *(Type 230)

*old product name

- pin header, solderable
- centerline 10.16 mm, direction of connection 90°
- closed ends
- color black

Technical data

V / A	600 / 15		
16 A / 630 V / 6 kV / 3 IEC 61984			
Overvoltage category	III	III	II
Pollution degree	3	2	2
Rated voltage	630 V	1600 V	1600 V
Rated test voltage	8.0 kV	8 kV	8.0 kV
Insulating material class	CTI 600		
Clearance and creepage distances	9.18 mm		
Solder pin dimension	1.0 x 1.0 mm		
Recommended pc board hole dia.	ø 1.5 mm		
Solder pin length	3.45 mm		
Protection category according to IEC 60529	IP 00		
Color	black		

Dimensional drawing

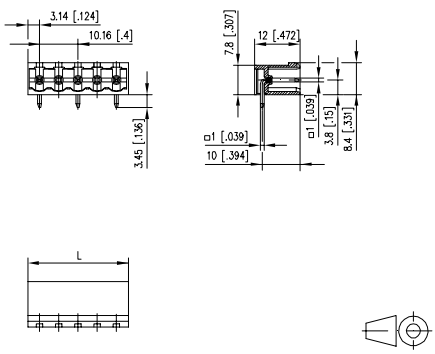

L = (Pole size - 1) * centerline + 6.28 mm (0.247 in.)

P/N

312302 ☐

Complete the part number by adding the pole size.

	02	03	04	05	06	07	08
09	10	11	12				

(Information: page 143)

Standard pole sizes

Terminal blocks

for PT11AxxHBBF — Page

Terminal blocks

for PT11AxxVBEC — Page

Accessories

for **PT11AxxVBEC** — Page

Product family | Pole size | Color | Option

PT11AxxHBBF *(Type 236)

Centerline | Design | Function | *old product name

- pin header, solderable
- centerline 10.16 mm, direction of connection 90°
- closed ends
- color black, mounting flange

Technical data

V / A	600 / 15		
13.5 A / 630 V / 6 kV / 3 IEC 61984			
Overvoltage category	III	III	II
Pollution degree	3	2	2
Rated voltage	630 V	1600 V	1600 V
Rated test voltage	8.0 kV	8 kV	8.0 kV
Insulating material class	CTI 600		
Clearance and creepage distances	9.18 mm		
Solder pin dimension	1.0 x 1.0 mm		
Recommended pc board hole dia.	ø 1.5 mm		
Solder pin length	3.45 mm		
Protection category according to IEC 60529	IP 00		
Color	black		

Dimensional drawing

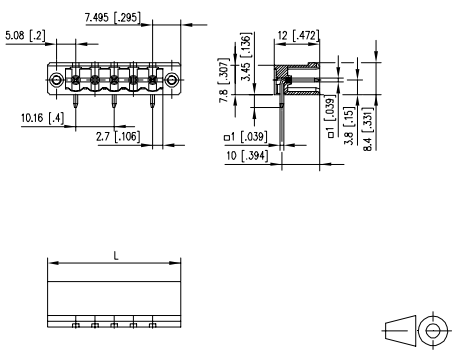

L = (Pole size - 1) * centerline + 14.99 mm (0.590 in.)

P/N
312362 ☐

Complete the part number by adding the pole size.

	02	03	04	05	06	07	08
09	10	11	12				

(Information: page 143)

Standard pole sizes

Product family | Pole size | Color | Option

PT11AxxVBEC *(Type 219)

Centerline | Design | Function | *old product name

- pin header, solderable
- centerline 10.16 mm, direction of connection vertical 0°
- open ends, fittable without loss of poles
- color black

Technical data

V / A	600 / 15		
13.5 A / 630 V / 6 kV / 3 IEC 61984			
Overvoltage category	III	III	II
Pollution degree	3	2	2
Rated voltage	630 V	1600 V	1600 V
Rated test voltage	8.0 kV	8 kV	8.0 kV
Insulating material class	CTI 600		
Clearance and creepage distances	9.18 mm		
Solder pin dimension	1.0 x 1.0 mm		
Recommended pc board hole dia.	ø 1.5 mm		
Solder pin length	3.25 mm		
Protection category according to IEC 60529	IP 00		
Color	black		

Dimensional drawing

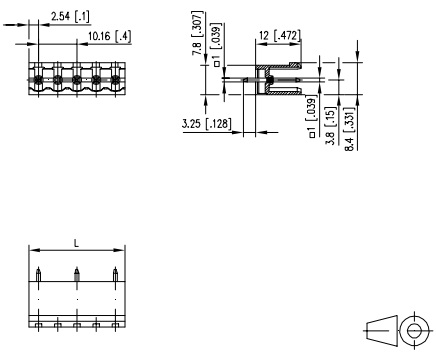

L = (Pole size - 1) * centerline + 5.08 mm (0.200 in.)

P/N
312192 ☐

Complete the part number by adding the pole size.

	02	03	04	05	06	07	08
09	10	11	12				

(Information: page 143)

Standard pole sizes

Terminal blocks

for PT11AxxVBBN	Page
SP04AxxVBNC (ASP04A)	61
RP03AxxHBLC (Type 213)	127
RP03AxxHBLD (Type 214)	127

Accessories

for PT11AxxVBBN	Page
700024	297

Terminal blocks

for PT11AxxVBBF	Page
RP01AxxVBLF (Type 251)	126
RP03AxxHBLF (Type 217)	128
RP03AxxHBLS (Type 218)	128

Accessories

for PT11AxxVBBF	Page
700024	297

Product family	Pole size	Color	Option
PT11	AxxV	B	B N
Centerline	Design	Function	

*(Type 220) *old product name

- pin header, solderable
- centerline 10.16 mm, direction of connection vertical 0°
- closed ends
- color black

Technical data

c UL us V / A	600 / 15		
SEV 13.5 A / 630 V / 6 kV / 3 IEC 61984			
Overvoltage category	III	III	II
Pollution degree	3	2	2
Rated voltage	630 V	1600 V	1600 V
Rated test voltage	8.0 kV	8 kV	8.0 kV
Insulating material class	CTI 600		
Clearance and creepage distances	9.18 mm		
Solder pin dimension	1.0 x 1.0 mm		
Recommended pc board hole dia.	ø 1.5 mm		
Solder pin length	3.25 mm		
Protection category according to IEC 60529	IP 00		
Color	black		

Dimensional drawing

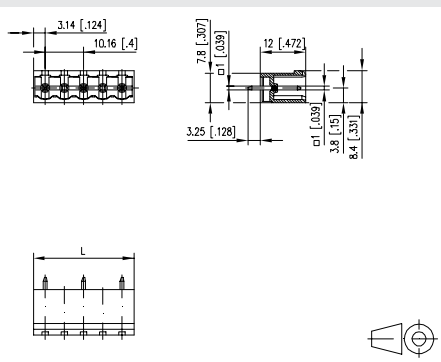

L = (Pole size - 1) * centerline + 6.28 mm (0.247 in.)

P/N

312202 ☐

Complete the part number by adding the pole size.

	02	03	04	05	06	07	08
09	10	11	12				

(Information: page 143)

Standard pole sizes

Product family	Pole size	Color	Option
PT11	AxxV	B	B F
Centerline	Design	Function	

*(Type 235) *old product name

- pin header, solderable
- centerline 10.16 mm, direction of connection vertical 0°
- closed ends
- color black, mounting flange

Technical data

c UL us V / A	600 / 15		
SEV 13.5 A / 630 V / 6 kV / 3 IEC 61984			
Overvoltage category	III	III	II
Pollution degree	3	2	2
Rated voltage	630 V	1600 V	1600 V
Rated test voltage	8.0 kV	8 kV	8.0 kV
Insulating material class	CTI 600		
Clearance and creepage distances	9.18 mm		
Solder pin dimension	1.0 x 1.0 mm		
Recommended pc board hole dia.	ø 1.5 mm		
Solder pin length	3.25 mm		
Protection category according to IEC 60529	IP 00		
Color	black		

Dimensional drawing

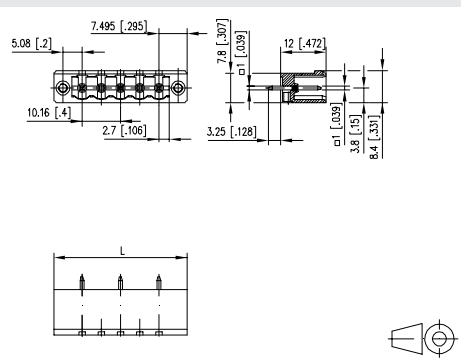

L = (Pole size - 1) * centerline + 14.99 mm (0.590 in.)

P/N

312352 ☐

Complete the part number by adding the pole size.

	02	03	04	05	06	07	08
09	10	11	12				

(Information: page 143)

Standard pole sizes

Notes

Symbol Definition

Guiding icons

- Spring clamp terminal block
- IDC terminal block
- Screw type terminal block
- Pin header
- Female connector
- Ethernet M12
- solderable
- pluggable
- Centerline
- Wire entry 90°
- Diagonal wire entry
- Wire entry 0°
- Lift system
- Wire protector
- modular
- Pin header for vertical mounting
- Shrouded pin header for vertical mounting
- Pin header with open ends for vertical mounting
- Pin header with closed ends for vertical mounting
- Pin header for horizontal mounting
- Shrouded pin header for horizontal mounting
- Pin header with open ends for horizontal mounting
- Pin header with closed ends for horizontal mounting
- designed for THR
- designed for SMT
- Tape & Reel possible

Pin Headers

for **FW143xxVBFC** — **Page**

Pin Headers

for **FT143xxVBFC** — **Page**

Product family | Pole size | Color | Option

FW143xxVBFC

Centerline | Design | Function

- female connector, solderable
- centerline 3.50 mm, direction of connection vertical 0°
- fittable without loss of poles
- color black

Technical data

V / A 300 / 10

10 A / 130 V / 2.5 kV / 3 IEC 61984

Overvoltage category	III	III	II
Pollution degree	3	2	2
Rated voltage	200 V	500 V	500 V
Rated test voltage	2.5 kV	2.5 kV	2.5 kV
Insulating material class	CTI 600		
Clearance and creepage distances	2.5 mm		
Solder pin dimension	0.4 x 1.0 mm		
Recommended pc board hole dia.	ø 1.2 mm		
Solder pin length	3.2 mm		
Protection category according to IEC 60529	IP 20		
Color	black		

Dimensional drawing

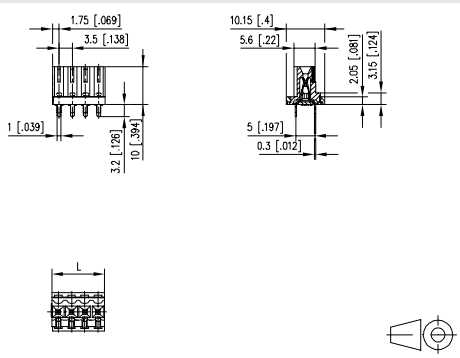

L = (Pole size - 1) * centerline + 3.5 mm (0.138 in.)

P/N

FW143 ☐ VBFC

Complete the part number by adding the pole size.

	02	03	04	05	06	07	08
09	10	11	12	13	14	15	16
17	18	19	20	21			

(Information: page 143)

Standard pole sizes

Product family | Pole size | Color | Option

FT143xxVBFC *(Type 089)

Centerline | Design | Function

*old product name

- female connector, solderable, double solder pins
- centerline 3.50 mm, direction of connection vertical 0°
- fittable without loss of poles
- color black
- board-to-board connection with headers centerline 3.50 mm / 0.138 inches possible

Technical data

V / A 300 / 10

10 A / 130 V / 2.5 kV / 3 IEC 61984

Overvoltage category	III	III	II
Pollution degree	3	2	2
Rated voltage	200 V	500 V	500 V
Rated test voltage	2.5 kV	2.5 kV	2.5 kV
Insulating material class	CTI 600		
Clearance and creepage distances	2.5 mm		
Solder pin dimension	2 x 0.4 x 1.0 mm		
Recommended pc board hole dia.	ø 1.2 mm		
Solder pin length	3.2 mm		
Protection category according to IEC 60529	IP 20		
Color	black		

Dimensional drawing

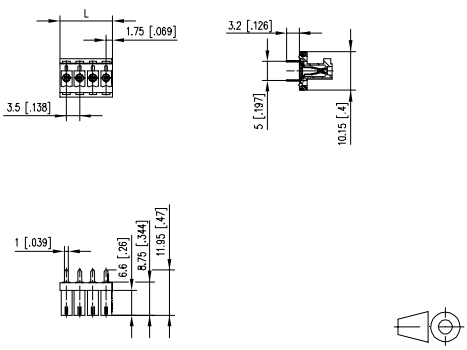

L = (Pole size - 1) * centerline + 3.5 mm (0.138 in.)

P/N

310891 ☐

Complete the part number by adding the pole size.

	02	03	04				

(Information: page 143)

Standard pole sizes

Pin Headers

Product family	Pole size	Color	Option
FT08	5xx	V B	F C
	Centerline	Design	Function

***(Type 026)**

*old product name

- female connector, solderable, double solder pins
- centerline 5.00 mm, direction of connection vertical 0°
- fittable without loss of poles
- color black
- board-to-board connection with headers centerline 5.00 mm / 0.197 inches possible

Technical data

6 A / 250 V / 4 kV / 3 IEC 61984

Overvoltage category	III	III	II
Pollution degree	3	2	2
Rated voltage	320 V	800 V	800 V
Rated test voltage	4 kV	4.0 kV	4 kV
Insulating material class	CTI 600		
Clearance and creepage distances	4 mm		
Solder pin dimension	2 x 0.4 x 1.0 mm		
Recommended pc board hole dia.	ø 1.4 mm		
Solder pin length	3.2 mm		
Protection category according to IEC 60529	IP 20		
Min. insul. strip length	12 mm		
Color	black		

Dimensional drawing

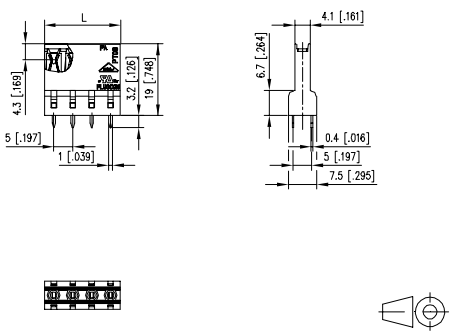

L = (Pole size - 1) * centerline + 5 mm (0.197 in.)

P/N

310261 □

Complete the part number by adding the pole size.

	02	03	04	05	06	07	08
09	10	11	12	13	14	15	16

(Information: page 143)

Standard pole sizes

Board-to-board connectors

Board-to-board connectors

U | Contact

Board-to-board connectors

The integration of numerous applications into one single device along with the miniaturization of the devices themselves lead to entirely new challenges for PC board connectivity. As competent partner and specialist for connection components and cabling systems, METZ CONNECT has taken these challenges.

In order to integrate several applications into one single device, the PCBs must not only be arranged on top and next to each other but also be connected to each other. This is made possible by so called board-to-board connectors that are available in a multitude of variants.

The new product range of board-to-board connectors from METZ CONNECT offers exactly that connection system which is indispensable for compact, flexible and safe connections of PCBs; in the same time its components will compensate for important displacement tolerances and PCB distances. Especially in building services engineering, data and communication techniques as well as in industrial electronics efficient, space saving, and yet powerful connections of the individual applications integrated into one single device are a must.

The components presented here are geared to power transmission and ideally suited for modular devices. We will continue to extend this product family in line with the next applications.

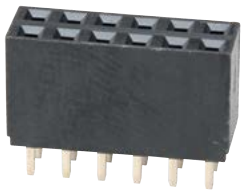

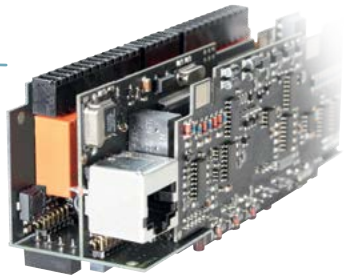

Product key board-to-board connectors

Product range
- **P** = Pin headers
- **F** = Female connectors

Type

Number of poles

Color
- **B** = black
- **G** = green

Option
- **C** = fittable*
- **F** = flange
- **N** = normal
- **L** = connection left-hand side
- **R** = connection right-hand side

P R 20 2 xx V B B N XXXX

Fixation
- **M** = SMD/SMT (reflow soldering) according to JEDEC 20
- **R** = THR solderable (pin in paste) according to JEDEC 20
- **T** = THT solderable (wave soldering)

Centerline (mm)
- **2** = 2.54
- **B** = 1.27
- **C** = 2.00

Structure
- **H** = horizontal = 90°
- **V** = vertical = 0° = 180°

Function
- **B** = shrouded, closed ends
- **D** = two-tier 2-row
- **E** = shrouded, open ends
- **F** = spring contact
- **H** = non-shrouded
- **N** = standard
- **V** = variant

Variants/ Taping
- **G1** = tape 16 mm
- **G2** = tape 32 mm
- **G3** = tape 44 mm
- **G4** = tape 56 mm
- **G5** = tape 72 mm
- **G6** = tape 88 mm
- **G7** = tape 24 mm
- **G8** = tape 104 mm
- **T1** = tube

* Fittable stands for a loose sequencing without loss of poles (without dovetails).

Symbol Definition

Guiding icons

- Spring clamp terminal block
- IDC terminal block
- Screw type terminal block
- Pin header
- Female connector
- Ethernet M12
- solderable
- pluggable
- Centerline
- Wire entry 90°
- Diagonal wire entry
- Wire entry 0°
- Lift system
- Wire protector
- modular
- Pin header for vertical mounting
- Shrouded pin header for vertical mounting
- Pin header with open ends for vertical mounting
- Pin header with closed ends for vertical mounting
- Pin header for horizontal mounting
- Shrouded pin header for horizontal mounting
- Pin header with open ends for horizontal mounting
- Pin header with closed ends for horizontal mounting
- designed for THR
- designed for SMT
- Tape & Reel possible

Product family | Pole size | Color | Option

PR20BxxHBNN

Centerline | Design | Function

- pin header, THR solderable
- centerline 1.27 mm, direction of connection 90°
- color black
- single row

Rated current	1 A
Solder pin dimension	0.4 x 0.4 mm
Recommended pc board hole dia.	ø 0.65 mm
Protection category according to IEC 60529	IP 00
Color	black

Dimensional drawing

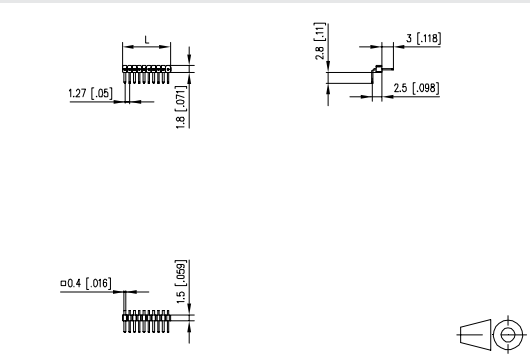

L = (Pole size - 1) * centerline + 1.27 mm (0.050 in.)

P/N

PR20B ☐ HBNN

Complete the part number by adding the pole size.

	02	03	04	05	06	07	08
09	10	11	12	13	14	15	16
17	18	19	...	40			

(Information: page 201)

Standard pole sizes

Product family | Pole size | Color | Option

PR20BxxHBDN

Centerline | Design | Function

- pin header, THR solderable
- centerline 1.27 mm, direction of connection 90°
- color black
- dual rows

Rated current	1 A
Solder pin dimension	0.4 x 0.4 mm
Recommended pc board hole dia.	ø 0.65 mm
Protection category according to IEC 60529	IP 00
Color	black

Dimensional drawing

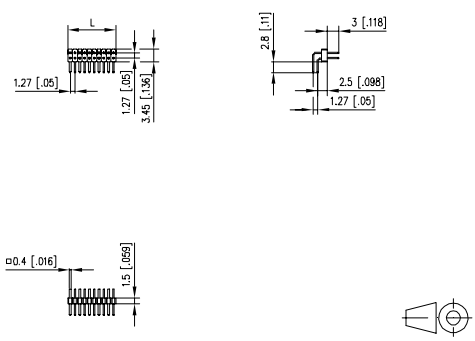

L = (Pole size - 1) * centerline + 1.27 mm (0.050 in.)

P/N

PR20B ☐ HBDN

Complete the part number by adding the pole size.

	02	03	04	05	06	07	08
09	10	11	12	13	14	15	16
17	18	19	...	40			

(Information: page 201)

Standard pole sizes

Product family	Pole size	Color	Option
PR20B	xx	V	B	N	N
Centerline	Design	Function	

- pin header, THR solderable
- centerline 1.27 mm, direction of connection vertical 0°
- color black
- single row

Rated current	1 A
Solder pin dimension	0.4 x 0.4 mm
Recommended pc board hole dia.	ø 0.65 mm
Protection category according to IEC 60529	IP 00
Color	black

Dimensional drawing

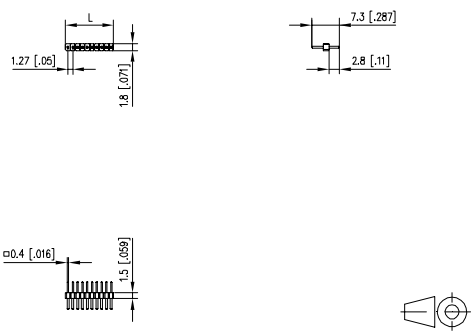

L = (Pole size - 1) * centerline + 1.27 mm (0.050 in.)

P/N

PR20B ☐ VBNN

Complete the part number by adding the pole size.

	02	03	04	05	06	07	08
09	10	11	12	13	14	15	16
17	18	19	...	40			

(Information: page 201)

Standard pole sizes

Product family	Pole size	Color	Option
PR20B	xx	V	B	D	N
Centerline	Design	Function	

- pin header, THR solderable
- centerline 1.27 mm, direction of connection vertical 0°
- color black
- dual rows

Rated current	1 A
Solder pin dimension	0.4 x 0.4 mm
Recommended pc board hole dia.	ø 0.65 mm
Protection category according to IEC 60529	IP 00
Color	black

Dimensional drawing

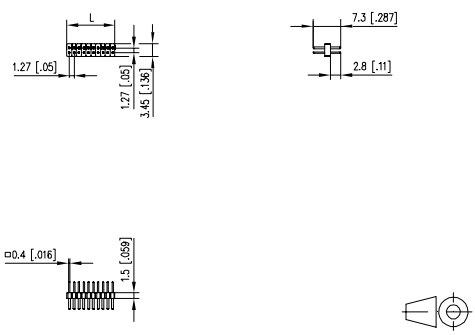

L = (Pole size - 1) * centerline + 1.27 mm (0.050 in.)

P/N

PR20B ☐ VBDN

Complete the part number by adding the pole size.

	02	03	04	05	06	07	08
09	10	11	12	13	14	15	16
17	18	19	...	40			

(Information: page 201)

Standard pole sizes

Product family | Pole size | Color | Option

PM20BxxVBNN

Centerline | Design | Function

- pin header, SMT solderable
- centerline 1.27 mm, direction of connection vertical 0°
- color black
- single row

Rated current	1 A
Solder pin dimension	0.4 x 0.4 mm
Protection category according to IEC 60529	IP 00
Color	black

Dimensional drawing

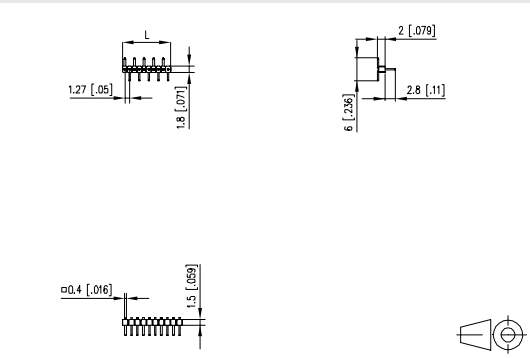

L = (Pole size - 1) * centerline + 1.27 mm (0.050 in.)

P/N

PM20B ☐ VBNN

Complete the part number by adding the pole size.

	02	03	04	05	06	07	08
09	10	11	12	13	14	15	16
17	18	19	...	40			

(Information: page 201)

Standard pole sizes

Product family | Pole size | Color | Option

PM20BxxVBDN

Centerline | Design | Function

- pin header, SMT solderable
- centerline 1.27 mm, direction of connection vertical 0°
- color black
- dual rows

Rated current	1 A
Solder pin dimension	0.4 x 0.4 mm
Protection category according to IEC 60529	IP 00
Color	black

Dimensional drawing

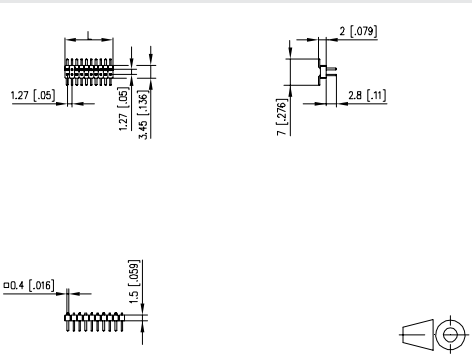

L = (Pole size - 1) * centerline + 1.27 mm (0.050 in.)

P/N

PM20B ☐ VBDN

Complete the part number by adding the pole size.

	02	03	04	05	06	07	08
09	10	11	12	13	14	15	16
17	18	19	...	40			

(Information: page 201)

Standard pole sizes

Product family	Pole size	Color	Option
PR20	Cxx	H	BNN
Centerline		Design	Function

- pin header, THR solderable
- centerline 2.00 mm, direction of connection 90°
- color black
- Tape & Reel packaging
- single row

Rated current	1 A
Solder pin dimension	0.5 x 0.5 mm
Recommended pc board hole dia.	ø 0.80 mm
Protection category according to IEC 60529	IP 00
Color	black

Dimensional drawing

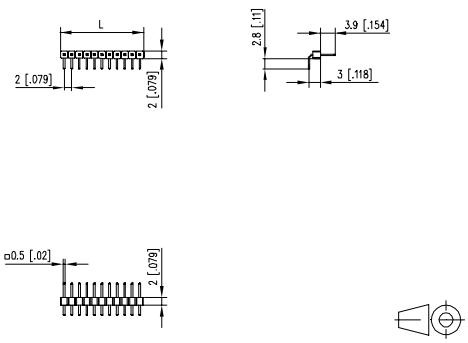

L = (Pole size - 1) * centerline + 2.0 mm (0.079 in.)

P/N

PR20C ☐ HBNN

Complete the part number by adding the pole size.

	02	03	04	05	06	07	08
09	10	11	12	13	14	15	16
17	18	19	...	40			

(Information: page 201)

Standard pole sizes

Product family	Pole size	Color	Option
PR20	Cxx	H	BDN
Centerline		Design	Function

- pin header, THR solderable
- centerline 2.00 mm, direction of connection 90°
- color black
- Tape & Reel packaging
- dual rows

Rated current	1 A
Solder pin dimension	0.5 x 0.5 mm
Recommended pc board hole dia.	ø 0.80 mm
Protection category according to IEC 60529	IP 00
Color	black

Dimensional drawing

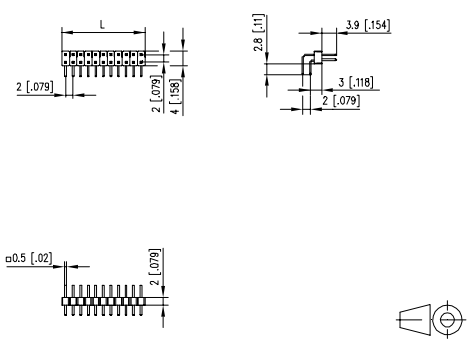

L = (Pole size - 1) * centerline + 2.0 mm (0.079 in.)

P/N

PR20C ☐ HBDN

Complete the part number by adding the pole size.

	02	03	04	05	06	07	08
09	10	11	12	13	14	15	16
17	18	19	...	40			

(Information: page 201)

Standard pole sizes

Product family | Pole size | Color | Option

PM20CxxHBNN

Centerline | Design | Function

- pin header, SMT solderable
- centerline 2.00 mm, direction of connection 90°
- color black
- single row

Rated current	1 A
Solder pin dimension	0.5 x 0.5 mm
Protection category according to IEC 60529	IP 00
Color	black

Dimensional drawing

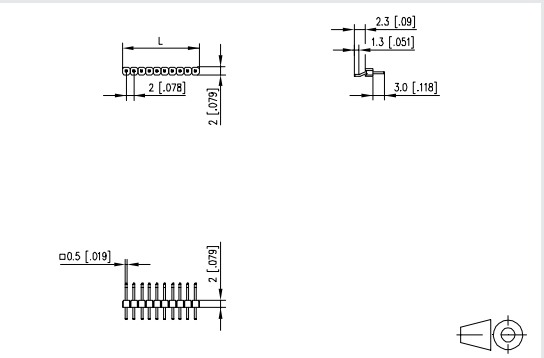

L = (Pole size - 1) * centerline + 2.0 mm (0.079 in.)

P/N

PM20C ☐ HBNN

Complete the part number by adding the pole size.

	02	03	04	05	06	07	08
09	10	11	12	13	14	15	16
17	18	19	...	40			

(Information: page 201)

Standard pole sizes

Product family | Pole size | Color | Option

PM20CxxHBDN

Centerline | Design | Function

- pin header, SMT solderable
- centerline 2.00 mm, direction of connection 90°
- color black
- dual rows

Rated current	1 A
Solder pin dimension	0.5 x 0.5 mm
Protection category according to IEC 60529	IP 00
Color	black

Dimensional drawing

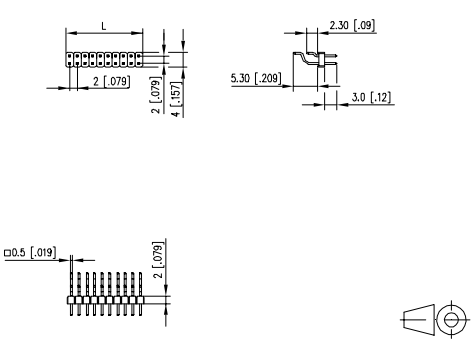

L = (Pole size - 1) * centerline + 2.0 mm (0.079 in.)

P/N

PM20C ☐ HBDN

Complete the part number by adding the pole size.

	02	03	04	05	06	07	08
09	10	11	12	13	14	15	16
17	18	19	...	40			

(Information: page 201)

Standard pole sizes

Product family | Pole size | Color | Option

PR20CxxVBNN

Centerline | Design | Function

- pin header, THR solderable
- centerline 2.00 mm, direction of connection vertical 0°
- color black
- Tape & Reel packaging
- single row

Rated current	1 A
Solder pin dimension	0.5 x 0.5 mm
Recommended pc board hole dia.	ø 0.80 mm
Protection category according to IEC 60529	IP 00
Color	black

Dimensional drawing

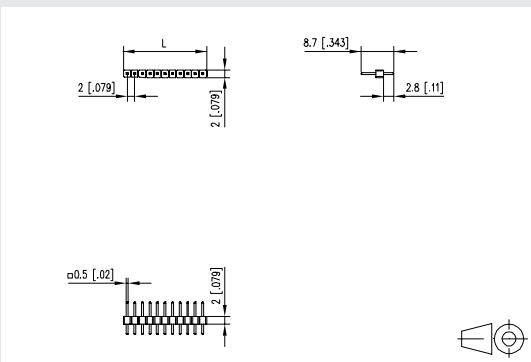

L = (Pole size - 1) * centerline + 2.0 mm (0.079 in.)

P/N

PR20C ☐ VBNN

Complete the part number by adding the pole size.

	02	03	04	05	06	07	08
09	10	11	12	13	14	15	16
17	18	19	...	40			

(Information: page 201)

Standard pole sizes

Product family | Pole size | Color | Option

PR20CxxVBDN

Centerline | Design | Function

- pin header, THR solderable
- centerline 2.00 mm, direction of connection vertical 0°
- color black
- Tape & Reel packaging
- dual rows

Rated current	1 A
Solder pin dimension	0.5 x 0.5 mm
Recommended pc board hole dia.	ø 0.80 mm
Protection category according to IEC 60529	IP 00
Color	black

Dimensional drawing

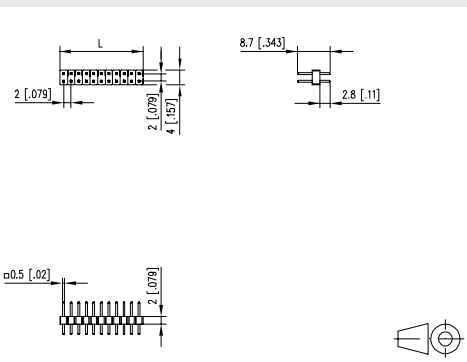

L = (Pole size - 1) * centerline + 2.0 mm (0.079 in.)

P/N

PR20C ☐ VBDN

Complete the part number by adding the pole size.

	02	03	04	05	06	07	08
09	10	11	12	13	14	15	16
17	18	19	...	40			

(Information: page 201)

Standard pole sizes

Product family | Pole size | Color | Option

PM20CxxVBNN

Centerline | Design | Function

- pin header, SMT solderable
- centerline 2.00 mm, direction of connection vertical 0°
- color black
- Tape & Reel packaging
- single row

Rated current	1 A
Solder pin dimension	0.5 x 0.5 mm
Color	black

Dimensional drawing

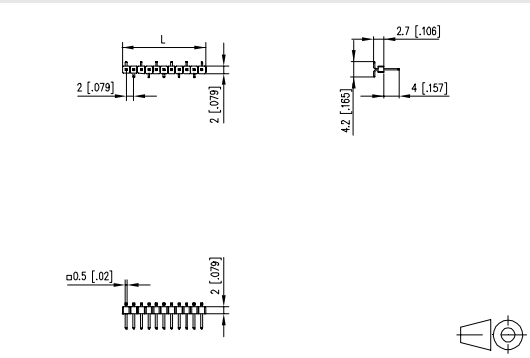

L = (Pole size - 1) * centerline + 2.0 mm (0.079 in.)

P/N

PM20C ☐ VBNN

Complete the part number by adding the pole size.

	02	03	04	05	06	07	08
09	10	11	12	13	14	15	16
17	18	19	...	40			

(Information: page 201)

Standard pole sizes

Product family | Pole size | Color | Option

PM20CxxVBDN

Centerline | Design | Function

- pin header, SMT solderable
- centerline 2.00 mm, direction of connection vertical 0°
- color black
- Tape & Reel packaging
- dual rows

Rated current	1 A
Solder pin dimension	0.5 x 0.5 mm
Color	black

Dimensional drawing

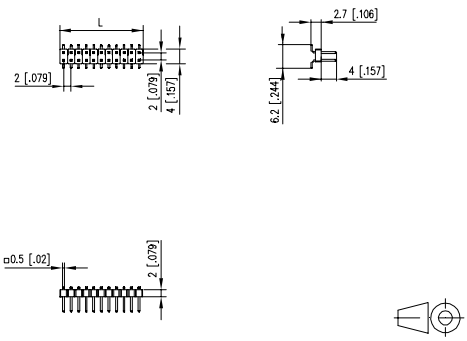

L = (Pole size - 1) * centerline + 2.0 mm (0.079 in.)

P/N

PM20C ☐ VBDN

Complete the part number by adding the pole size.

	02	03	04	05	06	07	08
09	10	11	12	13	14	15	16
17	18	19	...	40			

(Information: page 201)

Standard pole sizes

Product family	Pole size	Color	Option
PR202	xx	H	BNN
Centerline		Design	Function

- pin header, THR solderable
- centerline 2.54 mm, direction of connection 90°
- color black
- single row

Rated current	3 A
Solder pin dimension	0.64 x 0.64 mm
Recommended pc board hole dia.	ø 1.02 mm
Solder pin length	3.00 mm
Protection category according to IEC 60529	IP 00
Color	black

Dimensional drawing

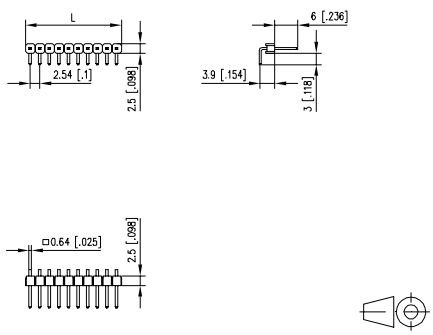

L = (Pole size - 1) * centerline + 2.19 mm (0.086 in.)

P/N

PR202 ☐ HBNN

Complete the part number by adding the pole size.

	02	03	04	05	06	07	08
09	10	11	12	13	14	15	16
17	18	19	...	40			

(Information: page 201)

Standard pole sizes

Product family	Pole size	Color	Option
PR202	xx	H	BDN
Centerline		Design	Function

- pin header, THR solderable
- centerline 2.54 mm, direction of connection 90°
- color black
- dual rows

Rated current	3 A
Solder pin dimension	0.64 x 0.64 mm
Recommended pc board hole dia.	ø 1.02 mm
Solder pin length	3.00 mm
Protection category according to IEC 60529	IP 00
Color	black

Dimensional drawing

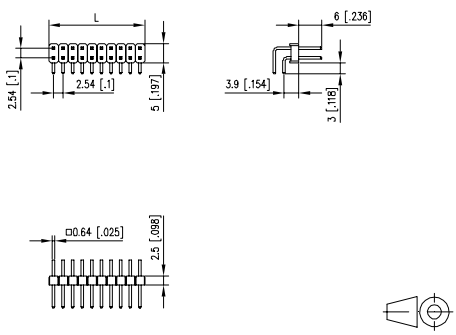

L = (Pole size - 1) * centerline + 2.54 mm (0.100 in.)

P/N

PR202 ☐ HBDN

Complete the part number by adding the pole size.

	02	03	04	05	06	07	08
09	10	11	12	13	14	15	16
17	18	19	...	40			

(Information: page 201)

Standard pole sizes

Product family	Pole size	Color	Option
PM202	xx	H	B	N	N
Centerline	Design	Function	

- pin header, SMT solderable
- centerline 2.54 mm, direction of connection 90°
- color black
- Tape & Reel packaging
- single row

Rated current	3 A
Solder pin dimension	0.64 x 0.64 mm
Color	black

Dimensional drawing

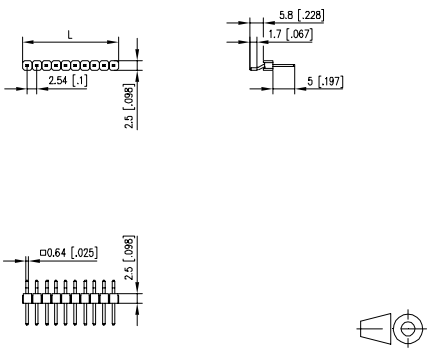

L = (Pole size - 1) * centerline + 2.54 mm (0.100 in.)

P/N

PM202 ☐ HBNN

Complete the part number by adding the pole size.

	02	03	04	05	06	07	08
09	10	11	12	13	14	15	16
17	18	19	...	40			

(Information: page 201)

Standard pole sizes

Product family	Pole size	Color	Option
PM202	xx	H	B	D	N
Centerline	Design	Function	

- pin header, SMT solderable
- centerline 2.54 mm, direction of connection 90°
- color black
- Tape & Reel packaging
- dual rows

Rated current	3 A
Solder pin dimension	0.64 x 0.64 mm
Color	black

Dimensional drawing

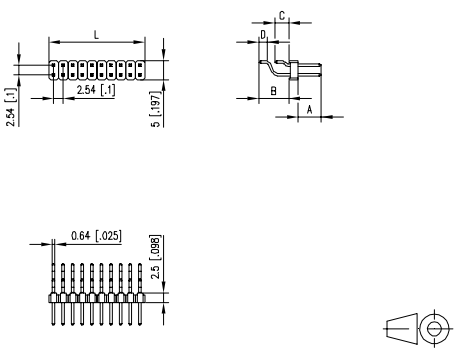

L = (Pole size - 1) * centerline + 2.54 mm (0.100 in.)

P/N

PM202 ☐ HBDN

Complete the part number by adding the pole size.

	02	03	04	05	06	07	08
09	10	11	12	13	14	15	16
17	18	19	...	40			

(Information: page 201)

Standard pole sizes

Product family	Pole size	Color	Option
PR202	xx	V	BNN
Centerline		Design	Function

- pin header, THR solderable
- centerline 2.54 mm, direction of connection vertical 0°
- color black
- single row

Rated current	3 A
Solder pin dimension	0.64 x 0.64 mm
Recommended pc board hole dia.	ø 1.02 mm
Solder pin length	3.0 mm
Protection category according to IEC 60529	IP 00
Color	black

Dimensional drawing

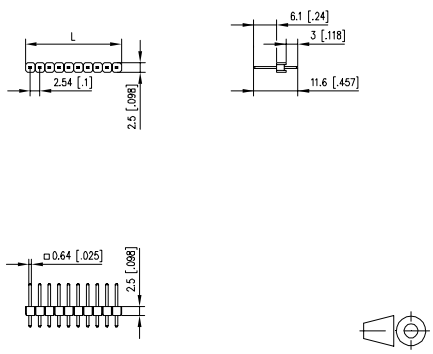

L = (Pole size - 1) * centerline + 2.54 mm (0.100 in.)

P/N

PR202 ☐ VBNN

Complete the part number by adding the pole size.

	02	03	04	05	06	07	08
09	10	11	12	13	14	15	16
17	18	19	...	40			

(Information: page 201)

Standard pole sizes

Product family	Pole size	Color	Option
PR202	xx	V	BDN
Centerline		Design	Function

- pin header, THR solderable
- centerline 2.54 mm, direction of connection vertical 0°
- color black
- dual rows

Rated current	3 A
Solder pin dimension	0.64 x 0.64 mm
Recommended pc board hole dia.	ø 1.02 mm
Solder pin length	3.00 mm
Protection category according to IEC 60529	IP 00
Color	black

Dimensional drawing

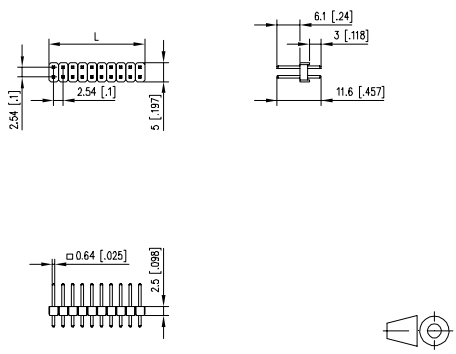

L = (Pole size - 1) * centerline + 2.54 mm (0.100 in.)

P/N

PR202 ☐ VBDN

Complete the part number by adding the pole size.

	02	03	04	05	06	07	08
09	10	11	12	13	14	15	16
17	18	19	...	40			

(Information: page 201)

Standard pole sizes

Product family | Pole size | Color | Option

PM202xxVBNN

Centerline | Design | Function

- pin header, SMT solderable
- centerline 2.54 mm, direction of connection vertical 0°
- color black
- Tape & Reel packaging
- single row

Rated current	3 A
Solder pin dimension	0.64 x 0.64 mm
Color	black

Dimensional drawing

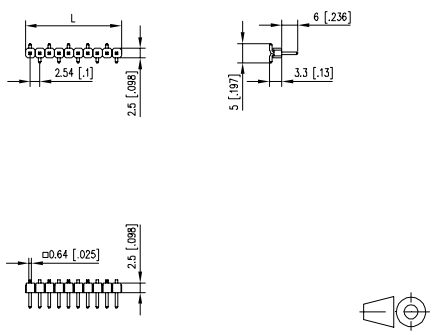

L = (Pole size - 1) * centerline + 2.54 mm (0.100 in.)

P/N

PM202 ☐ VBNN

Complete the part number by adding the pole size.

	02	03	04	05	06	07	08
09	10	11	12	13	14	15	16
17	18	19	...	40			

(Information: page 201)

Standard pole sizes

Product family | Pole size | Color | Option

PM202xxVBDN

Centerline | Design | Function

- pin header, SMT solderable
- centerline 2.54 mm, direction of connection vertical 0°
- color black
- Tape & Reel packaging
- dual rows

Rated current	3 A
Solder pin dimension	0.64 x 0.64 mm
Color	black

Dimensional drawing

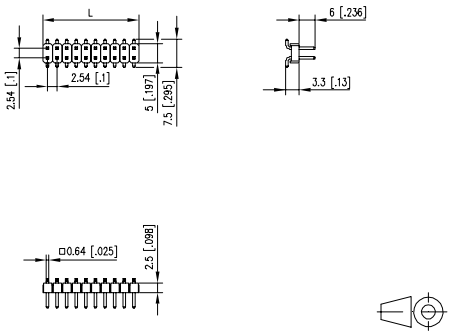

L = (Pole size - 1) * centerline + 2.54 mm (0.100 in.)

P/N

PM202 ☐ VBDN

Complete the part number by adding the pole size.

	02	03	04	05	06	07	08
09	10	11	12	13	14	15	16
17	18	19	...	40			

(Information: page 201)

Standard pole sizes

Symbol Definition

Guiding icons

- Spring clamp terminal block
- IDC terminal block
- Screw type terminal block
- Pin header
- Female connector
- Ethernet M12
- solderable
- pluggable
- Centerline
- Wire entry 90°
- Diagonal wire entry
- Wire entry 0°
- Lift system
- Wire protector
- modular
- Pin header for vertical mounting
- Shrouded pin header for vertical mounting
- Pin header with open ends for vertical mounting
- Pin header with closed ends for vertical mounting
- Pin header for horizontal mounting
- Shrouded pin header for horizontal mounting
- Pin header with open ends for horizontal mounting
- Pin header with closed ends for horizontal mounting
- designed for THR
- designed for SMT
- Tape & Reel possible

Product family	Pole size	Color	Option
FR20	Bxx	V	BNN
Centerline		Design	Function

- female connector, THR solderable
- centerline 1.27 mm, direction of connection vertical 0°
- closed ends
- color black
- Tape & Reel packaging
- single row

Rated current	1 A
Solder pin dimension	0.5 x 0.15 mm
Recommended pc board hole dia.	ø 0.6 mm
Solder pin length	1.75 mm
Protection category according to IEC 60529	IP 00
Color	black

Dimensional drawing

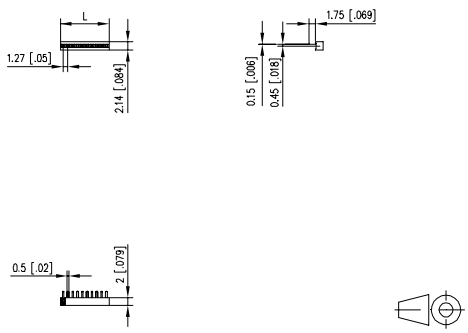

L = (Pole size - 1) * centerline + 1.65 mm (0.065 in.)

P/N

FR20B ☐ VBNN

Complete the part number by adding the pole size.

	02	03	04	05	06	07	08
09	10	11	12	13	14	15	16
17	18	19	..	40			

(Information: page 201)

Standard pole sizes

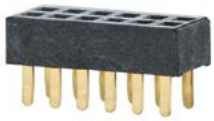

Product family	Pole size	Color	Option
FR20	Bxx	V	BDN
Centerline		Design	Function

- female connector, THR solderable
- centerline 1.27 mm, direction of connection vertical 0°
- closed ends
- color black
- Tape & Reel packaging
- dual rows

Rated current	1 A
Solder pin dimension	0.5 x 0.15 mm
Recommended pc board hole dia.	ø 0.7 mm
Solder pin length	1.75 mm
Protection category according to IEC 60529	IP 00
Color	black

Dimensional drawing

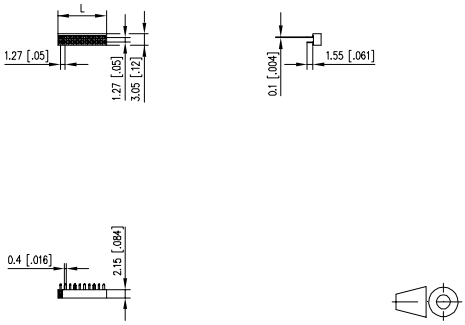

L = (Pole size - 1) * centerline + 1.27 mm (0.050 in.)

P/N

FR20B ☐ VBDN

Complete the part number by adding the pole size.

	02	03	04	05	06	07	08
09	10	11	12	13	14	15	16
17	18	19	..	40			

(Information: page 201)

Standard pole sizes

Product family	Pole size	Color	Option
FM20	Bxx	VB	DN
Centerline		Design	Function

- female connector, SMT solderable
- centerline 1.27 mm, direction of connection vertical 0°
- closed ends
- color black
- Tape & Reel packaging
- dual rows

Rated current	1 A
Solder pin dimension	0.32 x 0.1 mm
Protection category according to IEC 60529	IP 00
Color	black

Dimensional drawing

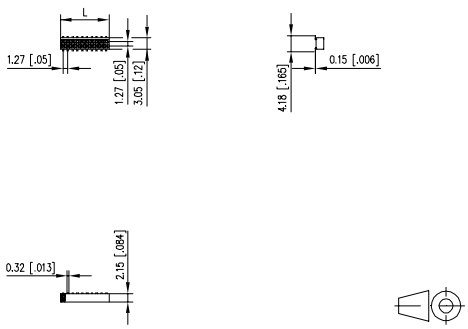

L = (Pole size - 1) * centerline + 1.73 mm (0.068 in.)

P/N

FM20B ☐ VBDN

Complete the part number by adding the pole size.

	02	03	04	05	06	07	08
09	10	11	12	13	14	15	16
17	18	19	..	40			

(Information: page 201)

Standard pole sizes

Product family	Pole size	Color	Option
FR20	Cxx	H	BNN
Centerline		Design	Function

- female connector, THR solderable
- centerline 2.00 mm, direction of connection 90°
- closed ends
- color black
- Tape & Reel packaging
- single row

Rated current	1 A
Solder pin dimension	0.5 x 0.2 mm
Recommended pc board hole dia.	ø 0.70 mm
Solder pin length	3.0 mm
Protection category according to IEC 60529	IP 00
Color	black

Dimensional drawing

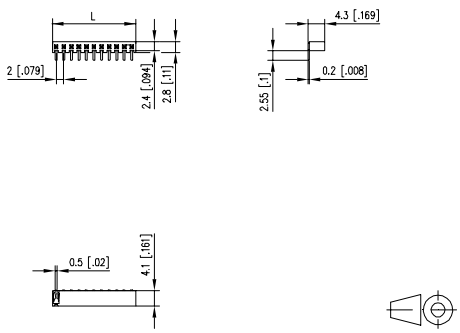

L = (Pole size - 1) * centerline + 2.0 mm (0.079 in.)

P/N

FR20C ☐ HBNN

Complete the part number by adding the pole size.

	02	03	04	05	06	07	08
09	10	11	12	13	14	15	16
17	18	19	..	40			

(Information: page 201)

Standard pole sizes

Product family	Pole size	Color	Option
FR20	Cxx	H	BDN
Centerline		Design	Function

- female connector, THR solderable
- centerline 2.00 mm, direction of connection 90°
- closed ends
- color black
- Tape & Reel packaging
- single row

Rated current	1 A
Solder pin dimension	0.5 x 0.2 mm
Recommended pc board hole dia.	ø 0.70 mm
Solder pin length	3.0 mm
Protection category according to IEC 60529	IP 00
Color	black

Dimensional drawing

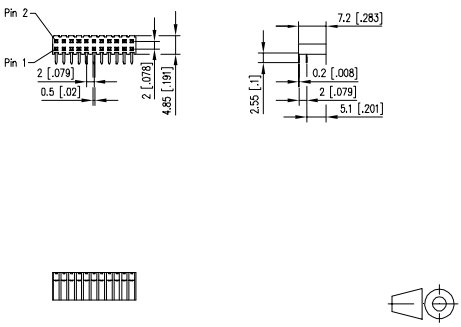

L = (Pole size - 1) * centerline + 2.0 mm (0.079 in.)

P/N

FR20C ☐ HBDN

Complete the part number by adding the pole size.

	02	03	04	05	06	07	08
09	10	11	12	13	14	15	16
17	18	19	..	40			

(Information: page 201)

Standard pole sizes

Product family | Pole size | Color | Option

FR20CxxVBNN

Centerline | Design | Function

- female connector, THR solderable
- centerline 2.00 mm, direction of connection vertical 0°
- closed ends
- color black
- Tape & Reel packaging
- single row

Rated current	1 A
Solder pin dimension	0.5 x 0.2 mm
Recommended pc board hole dia.	ø 0.7 mm
Solder pin length	2.20 mm
Protection category according to IEC 60529	IP 00
Color	black

Dimensional drawing

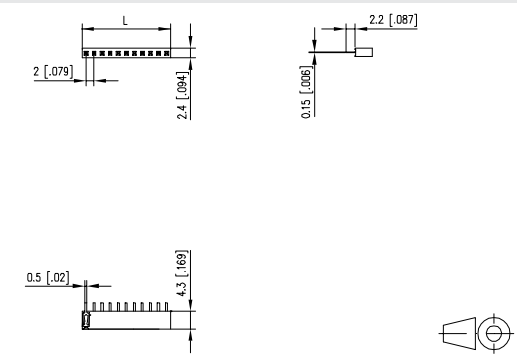

L = (Pole size - 1) * centerline + 2.0 mm (0.079 in.)

P/N

FR20C ☐ VBNN

Complete the part number by adding the pole size.

	02	03	04	05	06	07	08
09	10	11	12	13	14	15	16
17	18	19	..	40			

(Information: page 201)

Standard pole sizes

Product family | Pole size | Color | Option

FR20CxxVBDN

Centerline | Design | Function

- female connector, THR solderable
- centerline 2.00 mm, direction of connection vertical 0°
- closed ends
- color black
- Tape & Reel packaging
- dual rows

Rated current	1 A
Solder pin dimension	0.5 x 0.2 mm
Recommended pc board hole dia.	ø 0.7 mm
Solder pin length	2.20 mm
Protection category according to IEC 60529	IP 00
Color	black

Dimensional drawing

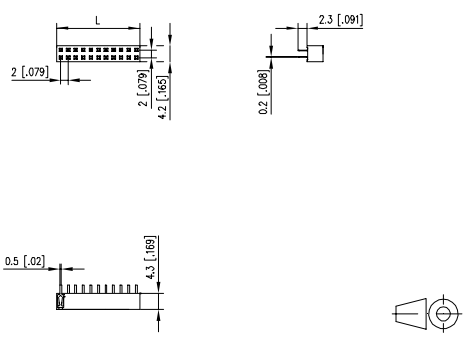

L = (Pole size - 1) * centerline + 2.0 mm (0.079 in.)

P/N

FR20C ☐ VBDN

Complete the part number by adding the pole size.

	02	03	04	05	06	07	08
09	10	11	12	13	14	15	16
17	18	19	..	40			

(Information: page 201)

Standard pole sizes

Product family	Pole size	Color	Option
FM20	CxxV	B	N N
Centerline	Design	Function	

- female connector, SMT solderable
- centerline 2.00 mm, direction of connection vertical 0°
- closed ends
- color black
- Tape & Reel packaging
- single row

Rated current	1 A
Solder pin dimension	0.5 x 0.2 mm
Protection category according to IEC 60529	IP 00
Color	black

Dimensional drawing

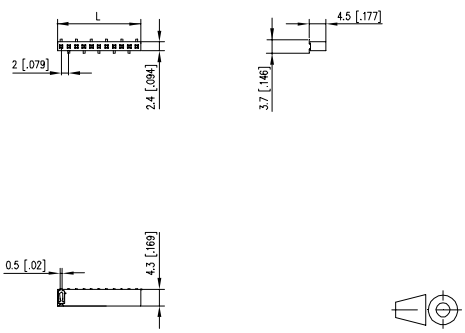

L = (Pole size - 1) * centerline + 2.0 mm (0.079 in.)

P/N

FM20C ☐ VBNN

Complete the part number by adding the pole size.

	02	03	04	05	06	07	08
09	10	11	12	13	14	15	16
17	18	19	..	40			

(Information: page 201)

Standard pole sizes

Product family	Pole size	Color	Option
FM20	CxxV	B	D N
Centerline	Design	Function	

- female connector, SMT solderable
- centerline 2.00 mm, direction of connection vertical 0°
- closed ends
- color black
- Tape & Reel packaging
- dual rows

Rated current	1 A
Solder pin dimension	0.5 x 0.2 mm
Protection category according to IEC 60529	IP 00
Color	black

Dimensional drawing

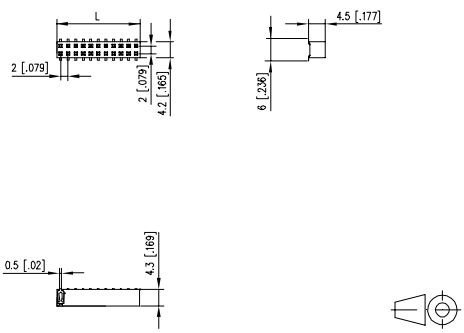

L = (Pole size - 1) * centerline + 2.0 mm (0.079 in.)

P/N

FM20C ☐ VBDN

Complete the part number by adding the pole size.

	02	03	04	05	06	07	08
09	10	11	12	13	14	15	16
17	18	19	..	40			

(Information: page 201)

Standard pole sizes

Product family	Pole size	Color	Option
FR20	2xx	H	BNN
Centerline		Design	Function

- female connector, THR solderable
- centerline 2.54 mm, direction of connection 90°
- closed ends
- color black
- single row

Rated current	3 A
Solder pin dimension	0.6 x 0.4 mm
Recommended pc board hole dia.	ø 1.02 mm
Solder pin length	3.00 mm
Protection category according to IEC 60529	IP 00
Color	black

Dimensional drawing

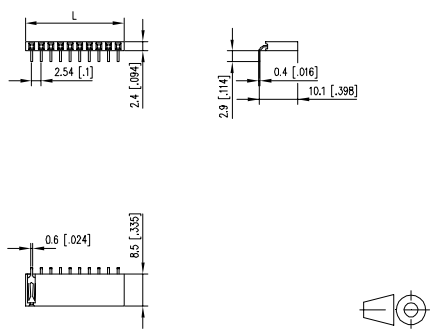

L = (Pole size - 1) * centerline + 3.04 mm (0.120 in.)

P/N

FR202 ☐ HBNN

Complete the part number by adding the pole size.

	02	03	04	05	06	07	08
09	10	11	12	13	14	15	16
17	18	19	...	40			

(Information: page 201)

Standard pole sizes

Product family	Pole size	Color	Option
FR20	2xx	H	BDN
Centerline		Design	Function

- female connector, THR solderable
- centerline 2.54 mm, direction of connection 90°
- closed ends
- color black
- dual rows

Rated current	3 A
Solder pin dimension	0.6 x 0.4 mm
Recommended pc board hole dia.	ø 1.02 mm
Solder pin length	3.00 mm
Protection category according to IEC 60529	IP 00
Color	black

Dimensional drawing

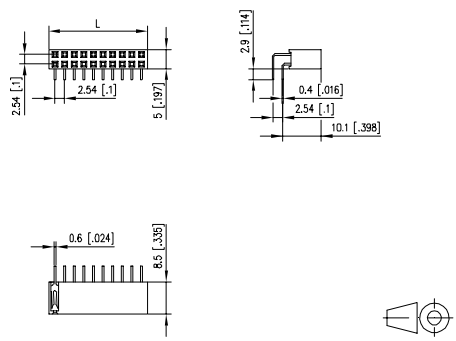

L = (Pole size - 1) * centerline + 3.04 mm (0.120 in.)

P/N

FR202 ☐ HBDN

Complete the part number by adding the pole size.

	02	03	04	05	06	07	08
09	10	11	12	13	14	15	16
17	18	19	...	40			

(Information: page 201)

Standard pole sizes

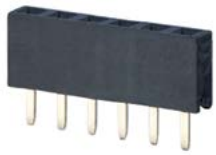

Product family	Pole size	Color	Option
FR202	xx	V	BNN0002
Centerline		Design	Function

- female connector, THR solderable
- centerline 2.54 mm, direction of connection vertical 0°
- closed ends
- color black
- single row

Rated current	3 A
Solder pin dimension	0.7 x 0.25 mm
Recommended pc board hole dia.	ø 1.02 mm
Solder pin length	2.80 mm
Protection category according to IEC 60529	IP 00
Color	black

Dimensional drawing

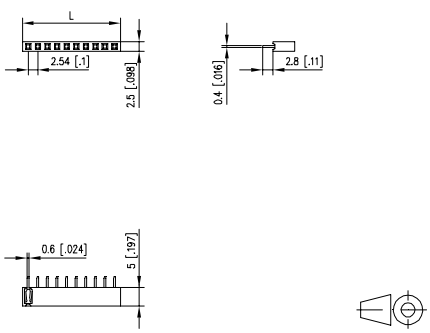

L = (Pole size - 1) * centerline + 2.94 mm (0.116 in.)

P/N

FR202 ☐ VBNN0002

Complete the part number by adding the pole size.

	02	03	04	05	06	07	08
09	10	11	12	13	14	15	16
17	18	19	...	40			

(Information: page 201)

Standard pole sizes

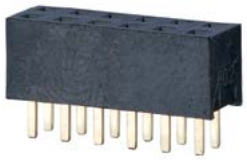

Product family	Pole size	Color	Option
FR202	xx	V	BDN0002
Centerline		Design	Function

- female connector, THR solderable
- centerline 2.54 mm, direction of connection vertical 0°
- closed ends
- color black
- dual rows

Rated current	3 A
Solder pin dimension	0.6 x 0.4 mm
Recommended pc board hole dia.	ø 1.02 mm
Solder pin length	2.80 mm
Protection category according to IEC 60529	IP 00
Color	black

Dimensional drawing

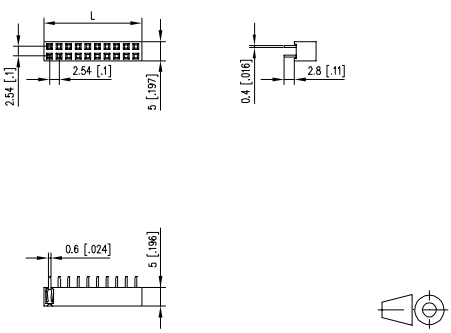

L = (Pole size - 1) * centerline + 3.04 mm (0.120 in.)

P/N

FR202 ☐ VBDN0002

Complete the part number by adding the pole size.

	02	03	04	05	06	07	08
09	10	11	12	13	14	15	16
17	18	19	...	40			

(Information: page 201)

Standard pole sizes

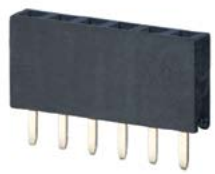

Product family | Pole size | Color | Option

FR202xxVBNN

Centerline | Design | Function

- female connector, THR solderable
- centerline 2.54 mm, direction of connection vertical 0°
- closed ends
- color black
- single row

Rated current	3 A
Solder pin dimension	0.7 x 0.25 mm
Recommended pc board hole dia.	ø 1.02 mm
Solder pin length	3.00 mm
Protection category according to IEC 60529	IP 00
Color	black

Dimensional drawing

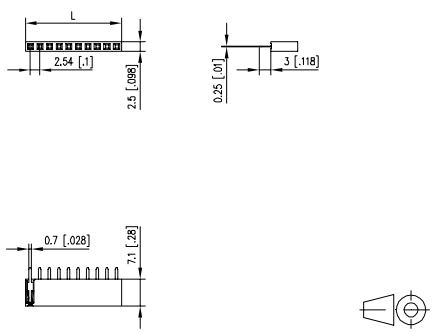

L = (Pole size - 1) * centerline + 3.04 mm (0.120 in.)

P/N

FR202 ☐ VBNN

Complete the part number by adding the pole size.

	02	03	04	05	06	07	08
09	10	11	12	13	14	15	16
17	18	19	...	40			

(Information: page 201)

Standard pole sizes

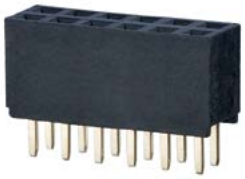

Product family | Pole size | Color | Option

FR202xxVBDN

Centerline | Design | Function

- female connector, THR solderable
- centerline 2.54 mm, direction of connection vertical 0°
- closed ends
- color black
- dual rows

Rated current	3 A
Solder pin dimension	0.7 x 0.25 mm
Recommended pc board hole dia.	ø 1.02 mm
Solder pin length	3.00 mm
Protection category according to IEC 60529	IP 00
Color	black

Dimensional drawing

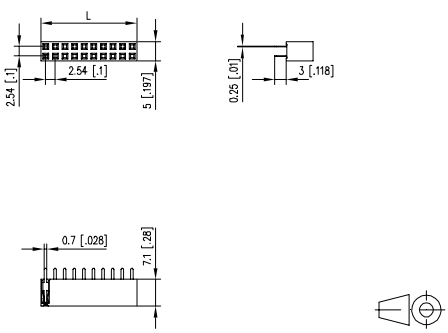

L = (Pole size - 1) * centerline + 3.04 mm (0.120 in.)

P/N

FR202 ☐ VBDN

Complete the part number by adding the pole size.

	02	03	04	05	06	07	08
09	10	11	12	13	14	15	16
17	18	19	...	40			

(Information: page 201)

Standard pole sizes

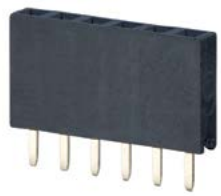

Product family	Pole size	Color	Option
FR202	xx	V	BNN0001
Centerline		Design	Function

- female connector, THR solderable
- centerline 2.54 mm, direction of connection vertical 0°
- closed ends
- color black
- single row

Rated current	3 A
Solder pin dimension	0.6 x 0.4 mm
Recommended pc board hole dia.	ø 1.02 mm
Solder pin length	3.00 mm
Protection category according to IEC 60529	IP 00
Color	black

Dimensional drawing

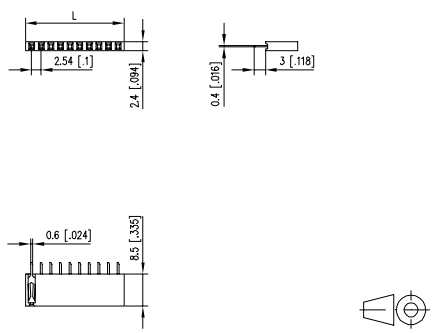

L = (Pole size - 1) * centerline + 3.04 mm (0.120 in.)

P/N

FR202 ☐ VBNN0001

Complete the part number by adding the pole size.

	02	03	04	05	06	07	08
09	10	11	12	13	14	15	16
17	18	19	...	40			

(Information: page 201)

Standard pole sizes

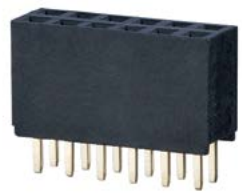

Product family	Pole size	Color	Option
FR202	xx	V	BDN0001
Centerline		Design	Function

- female connector, THR solderable
- centerline 2.54 mm, direction of connection vertical 0°
- closed ends
- color black
- dual rows

Rated current	3 A
Solder pin dimension	0.6 x 0.4 mm
Recommended pc board hole dia.	ø 1.02 mm
Solder pin length	3.00 mm
Protection category according to IEC 60529	IP 00
Color	black

Dimensional drawing

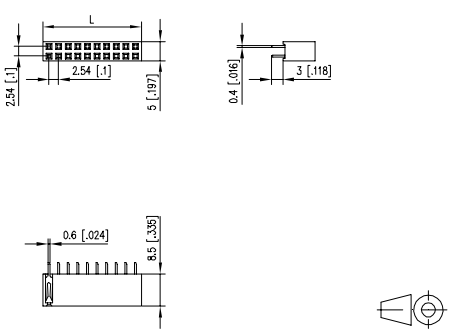

L = (Pole size - 1) * centerline + 3.04 mm (0.120 in.)

P/N

FR202 ☐ VBDN0001

Complete the part number by adding the pole size.

	02	03	04	05	06	07	08
09	10	11	12	13	14	15	16
17	18	19	...	40			

(Information: page 201)

Standard pole sizes

Product family | Pole size | Color | Option

FM202 2 xx V B N N

Centerline | Design | Function

- female connector, SMT solderable
- centerline 2.54 mm, direction of connection vertical 0°
- closed ends
- color black
- single row

Rated current	3 A
Solder pin dimension	0.65 x 0.25 mm
Protection category according to IEC 60529	IP 00
Color	black

Dimensional drawing

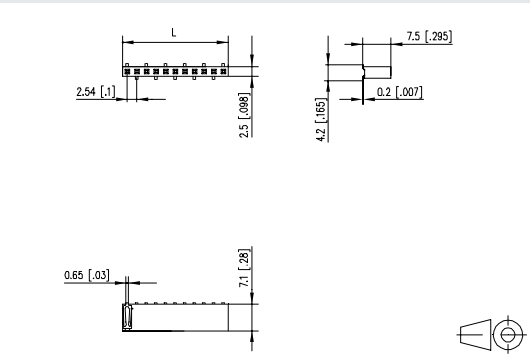

L = (Pole size - 1) * centerline + 2.54 mm (0.100 in.)

P/N

FM202 ☐ VBNN

Complete the part number by adding the pole size.

	02	03	04	05	06	07	08
09	10	11	12	13	14	15	16
17	18	19	...	40			

(Information: page 201)

Standard pole sizes

Product family | Pole size | Color | Option

FM202 2 xx V B D N

Centerline | Design | Function

- female connector, SMT solderable
- centerline 2.54 mm, direction of connection vertical 0°
- closed ends
- color black
- Tape & Reel packaging
- dual rows

Rated current	3 A
Solder pin dimension	0.5 x 0.25 mm
Protection category according to IEC 60529	IP 00
Color	black

Dimensional drawing

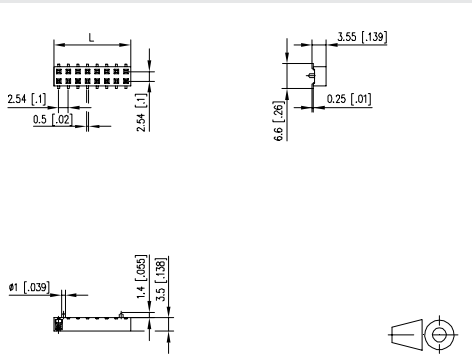

L = (Pole size - 1) * centerline + 2.94 mm (0.116 in.)

P/N

FM202 ☐ VBDN

Complete the part number by adding the pole size.

	02	03	04	05	06	07	08
09	10	11	12	13	14	15	16
17	18	19	...	40			

(Information: page 201)

Standard pole sizes

PC board jacks RJ/USB

PC board jacks/plugs

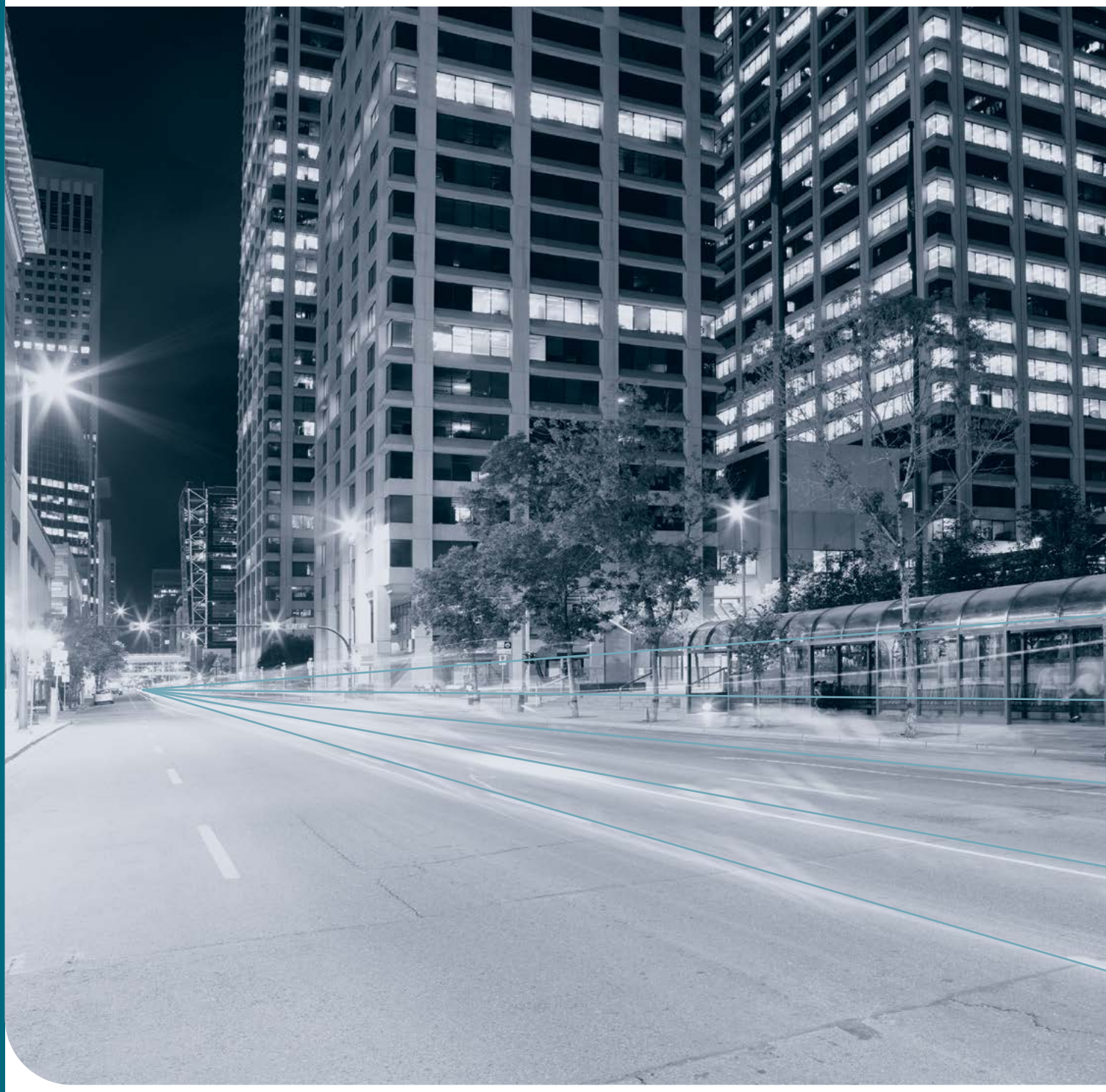

PC board jacks/plugs

Reliable, simple, quick and solution-oriented – this range of products of PCB jacks and plugs does not only offer decisive advantages for your industrial applications but also for their planning, assembly and their daily use. You benefit from a consistently high-quality transmission section from the PC board of a device via the cabling of the system, to the IT landscape and this irrespective of whether M12, RJ45, RJ12, USB or other products are used.

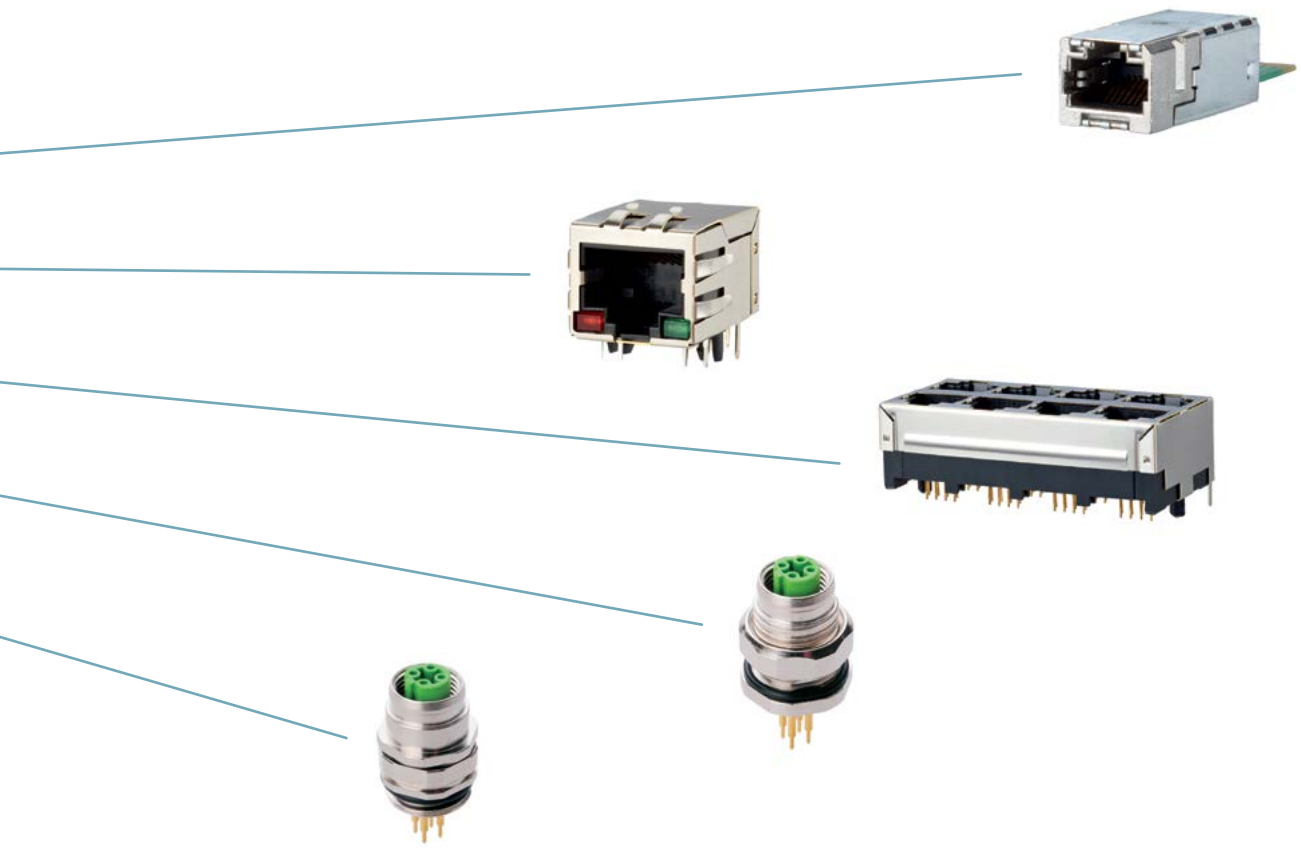

PC board RJ/USB

Description

After its start in the telephone technology of the 1980s, the RJ45 gradually took over data technology and today is an established part of data centers, building technology and wiring, as well as everyday devices. Billionfold approved it is used for most of the data communication interfaces – independent of the application and particular manufacturers or interest groups.
We offer you the ideal solution for a whole range of requirements and applications.

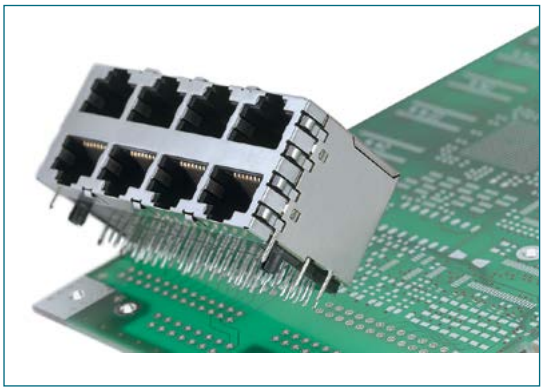

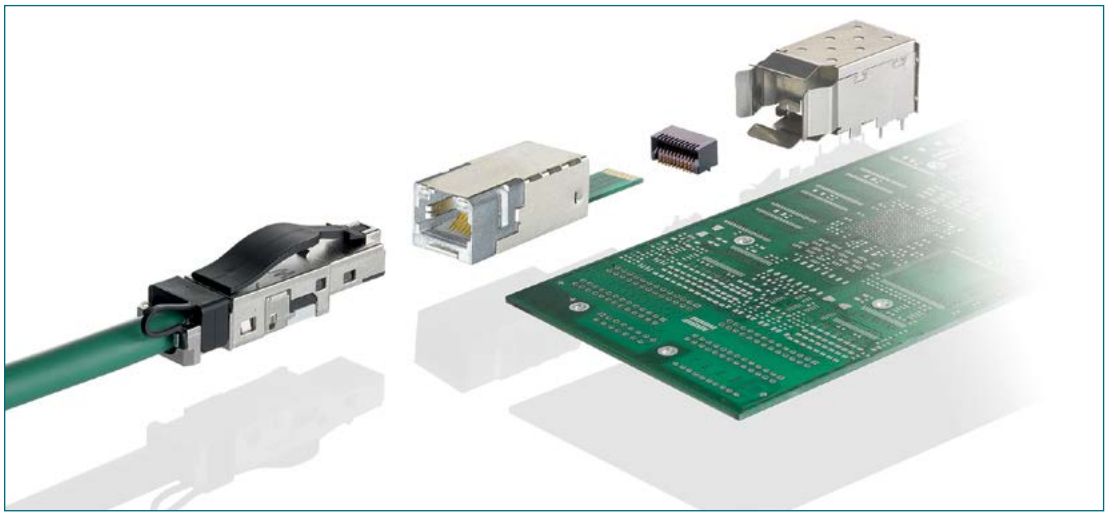

Direct PC board connection
For direct PCB connections we offer a system consisting of RJ45 modules with integrated magnetics, PCB edge connector and metal shield. This combination makes it possible for the device designer to position the PCB edge connectors on the circuit board and thus no longer send the device jacks through the soldering process but to locate them in the assembly process. Through vertical and horizontal versions of the edge connector, the device can be connected as required.
In combination with a fixing flange in the housing, there is no longer any mechanical load on the fine fixations of the circuit board. For the fixation to the housing and the IP67 protection we offer various flanges.
Through the integrated magnetics in the RJ45 module, it is no longer necessary to place them discreetly on the circuit board, thus remaining flexible in the use of the circuit board. Only the RJ45 module is exchanged for other transfer rates.

PC board jacks with magnetics
Through the integrated magnetics in the RJ45 jack, a separate structure of the transformers is no longer necessary, thus saving construction space for additional components.
The RJ45 jacks with magnetics are available in the variants 10/100 Mbit or 1 Gbit and thus meet the most common applications at the present time.

U | Contact

PCB jacks/plugs

In addition to connection solutions with integrated magnetics, we offer you a number of special RJ45 PCB jacks in different designs and for various processing options – developed in order to guarantee contact reliability in operation without any special housing. This resulted in a product program that offers ideal solutions to all those seeking a reliable and flexible connection technology for their device design. And when a RJ45 plug is required on the circuit board, we have a solution ready for you.

Product key PCB jacks/plugs RJ45/USB

A = Connection technique

T = through hole
S = surface mount
P = plug

A = unshielded
B = shielded
C = unshielded, multiport
D = shielded, multiport
G = USB
L = LED

Ports

LED:
0 = no LED
1 = yellow/green
2 = green/green
3 = green/yellow
4 = green/orange
5 = green/red
6 = red/green
7 = yellow/yellow
8 = green-yellow/green-yellow
9 = red-green/red-green

For USB:
1 = black
2 = white

For LED:
0 = no shielding
1 = no tabs
2 = tabs on top
3 = tabs on the sides
4 = tabs on the sides and on top

For SMT:
0 = tray
2 = Tape & Reel
3 = Tape & Reel with mylar tape

Connection technique → **A**
Fixation → **T**
Version → **X**
Ports → **X**
LED/color/variants/taping (**) → **XXXX**

A J T YY X X:X X X - XXXX

Product range → **J**
Type → **YY**
Connections/used contacts → **X:X**
Surface (*) → **X**

J = PCB jacks/plugs

01 – 99

2
4
5
6
8
9
A = 10
C = 12
E = 14
G = 16

1 = 6 µinch Au
2 = 15 µinch Au
3 = 30 µinch Au
4 = 50 µinch Au
5 = Flash Au

* As an option also a surface with 50 µinch Au is available for some variants.
** Information only required when one of the listed options is demanded.

Modul RJ45 Magnetics 10/100 MBit

- RJ45 module with integrated magnetics
- 10/100 Mbit
- shielded
- IP67 protection by using flanges V1, V4
- direct connection to pc board by using the Metal Shield and PCB Edge Connector
- not suitable for PoE / PoE plus

Circuit diagram

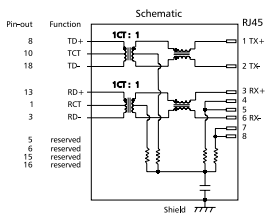

Dimensional drawing

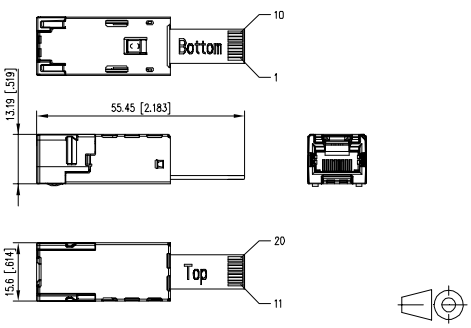

P/N	Color	Feature 1	Feature 2	EAN
MJT5213111	metallike	neutral	10/100 MBit	4250184125150

Modul RJ45 Magnetics 1 GBit

- RJ45 module with integrated magnetics
- 1 GBit
- shielded
- IP67 protection by using flanges V1, V4
- direct connection to pc board by using the Metal Shield and PCB Edge Connector

Variants:	Power over Ethernet (PoE)
MJT5214111	not suitable for PoE / PoE plus
MJT5214211	suitable for PoE / PoE plus

Circuit diagram

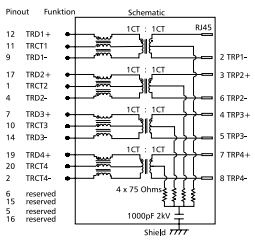

Dimensional drawing

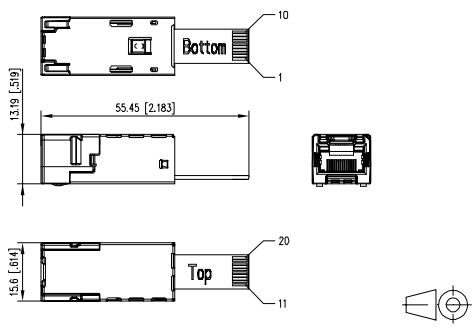

P/N	Color	Feature 1	Feature 2	EAN
MJT5214111	metallike	neutral	1 GBit	4250184125136
MJT5214211	metallike	neutral	1 GBit PoE	4250184125129

PCB Edge Connector vertical

- PCB edge connector
- direct connection to Module RJ45 Magnetics & Module SFP Tranceiver LC-D
- vertical mounting
- SMT solderable
- packing tape & reel

Drill pattern

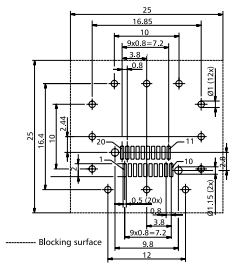

Dimensional drawing

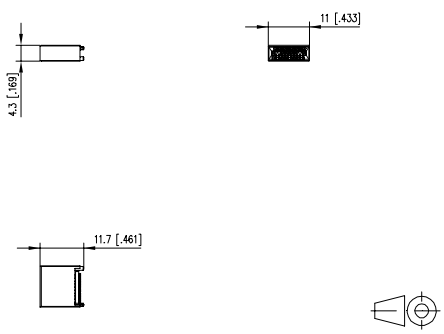

P/N	Color	Feature 1	Feature 2	EAN
MRS1100011-0G24	metallike	vertical		4250184125105

PCB Edge Connector horizontal

- PCB edge connector
- direct connection to Module RJ45 Magnetics
- horizontal mounting
- SMT solderable
- packing tape & reel

Drill pattern

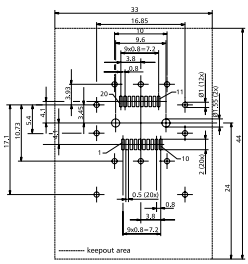

Dimensional drawing

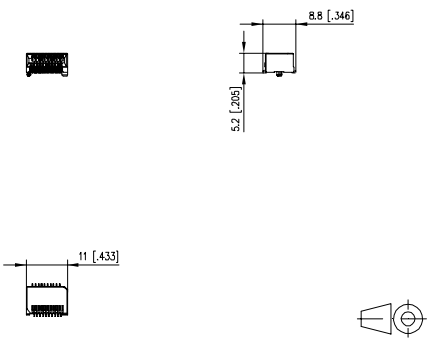

P/N	Color	Feature 1	Feature 2	EAN
MRS2100011-0G24	black	horizontal		4250184125372

PCB Edge Connector horizontal for SFP

- PCB edge connector
- direct connection to Module SFP Tranceiver LC-D
- horizontal mounting
- SMT solderable
- packing tape & reel

Drill pattern

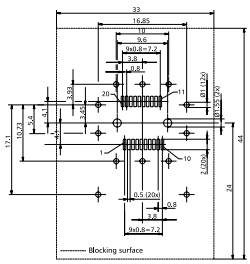

Dimensional drawing

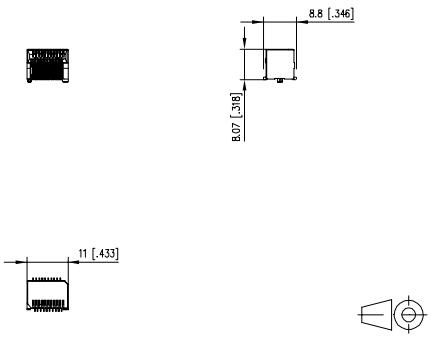

P/N	Color	Feature 1	Feature 2	EAN
MRS2000011-0G24	black	horizontal		4250184125082

Metal Shield vertical

- metal shield
- shield for RJ45 Module Magnetics and SFP Tranceiver LC-D
- vertical mounting
- solderable
- packing in tray

Drill pattern

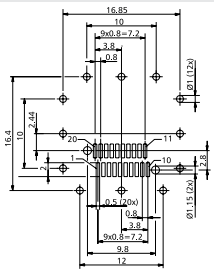

Dimensional drawing

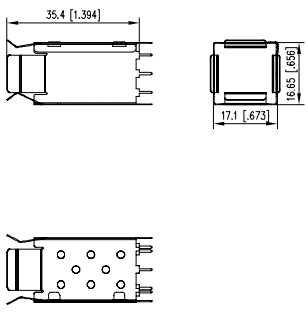

P/N	Color	Feature 1	Feature 2	EAN
MZT1110014	metallike	vertical		4250184125341

Metal Shield horizontal

- metal shield
- shield for RJ45 Module Magnetics and SFP Tranceiver LC-D
- horizontal mounting
- solderable
- packing in tray

Drill pattern

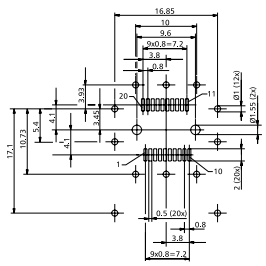

Dimensional drawing

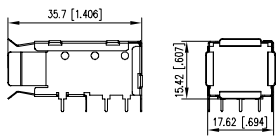

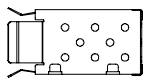

P/N	Color	Feature 1	Feature 2	EAN
MZT2110014	metallike	horizontal		4250184125402

AJS59L

- PC board jack, RJ45, unshielded
- single port, side entry, with 8 contacts
- solderable (SMT), color black
- L x W x H 14.99 mm x 15.75 mm x 12.76 mm
- LED, green/yellow, top latch
- Varianten: 6µ" Au, 30 µ" Au, Tape & Reel

Drill pattern

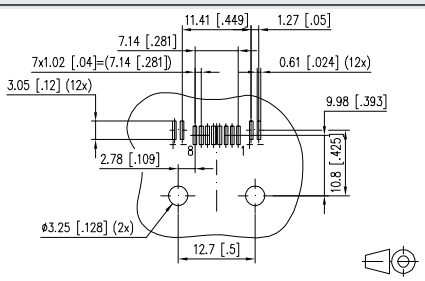

Dimensional drawing

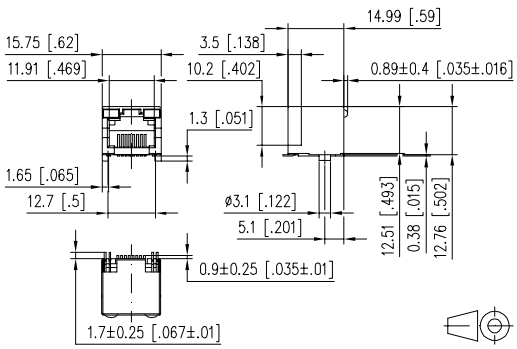

P/N	Color	Feature 1	Feature 2	EAN
AJS59L8811-0302	black	Tape & Reel	6 µ" Au	4250184172116
AJS59L8813-0302	black	Tape & Reel	30 µ" Au	4250184172123

AJT60A

- PC board jack, RJ45, unshielded
- single port, side entry, with 8 contacts
- solderable (THR), color black
- L x W x H 15.1 mm x 15.2 mm x 19.3 mm
- top latch

Drill pattern

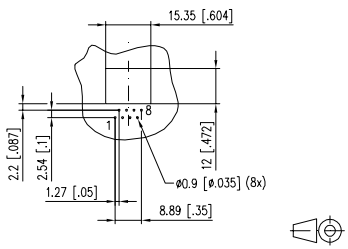

Dimensional drawing

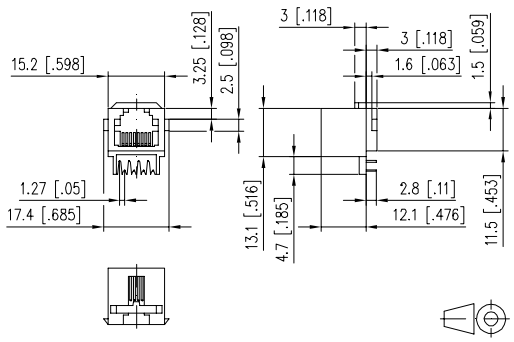

P/N	Color	Feature 1	Feature 2	EAN
AJT60A8815	black			4250184179757

AJT65A

- PC board jack, RJ45, unshielded
- single port, side entry, with 8 contacts
- solderable (THR), color black
- L x W x H 15 mm x 15.8 mm x 12.85 mm
- top latch

Drill pattern

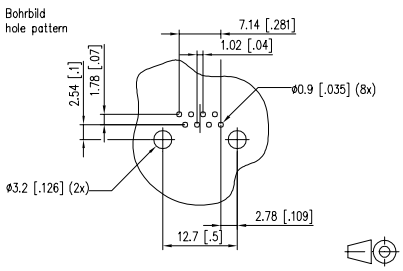

Dimensional drawing

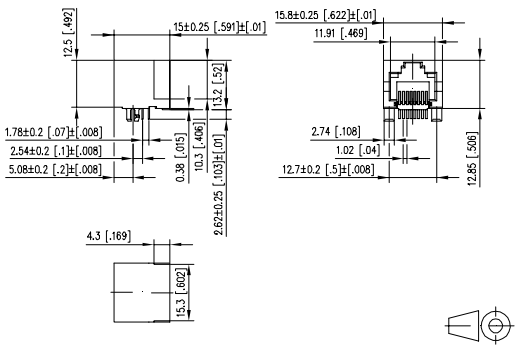

P/N	Color	Feature 1	Feature 2	EAN
AJT65A8812-0002	black	15 µ" Au	13 Zoll reel	4250184162292

AJT84A

- PC board jack, RJ45, unshielded
- single port, top entry, with 8 contacts
- solderable, color black
- L x W x H 16.10 mm x 15.34 mm x 16.20 mm
- top latch
- Variants: 30 µ" Au, 50 µ" Au

Dimensional drawing

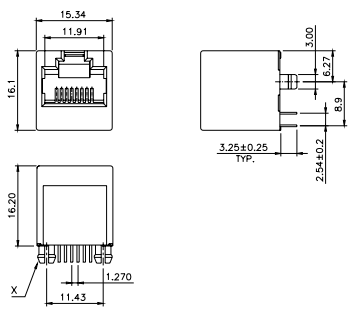

P/N	Color	Feature 1	Feature 2	EAN
AJT84A8813	black	30 µ" Au		4250184162964

AJS56A

- PC board jack, RJ45, unshielded
- single port, top entry, with 8 contacts
- solderable (SMT), color black
- L x W x H 14 mm x 14.6 mm x 12.8 mm
- bottom latch

Dimensional drawing

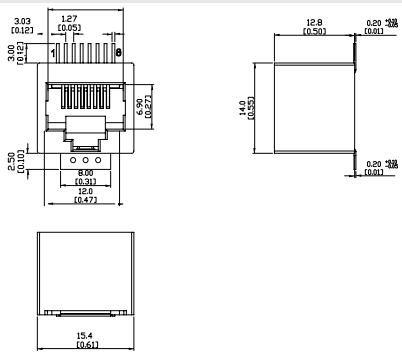

P/N	Color	Feature 1	Feature 2	EAN
AJS56A8811	black	6 µ" Au		4250184163039

AJT42C

- PC board jack, RJ45, unshielded
- multi port 2x4, side entry, with 8 contacts
- solderable, color black
- L x W x H 27.70 mm x 58.55 mm x 28.65 mm

Dimensional drawing

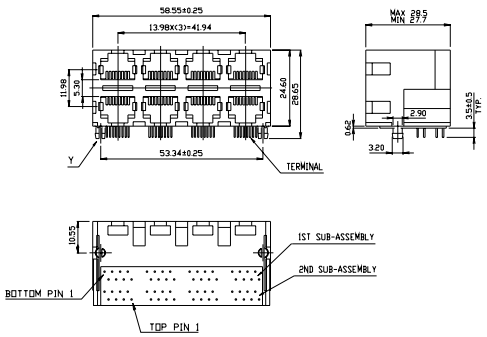

P/N	Color	Feature 1	Feature 2	EAN
AJT42C8883	black	30 µ" Au	2x4 port	4250184163084
AJT42C8821	black	6 µ" Au	2x1 port	4250184173052

AJT47C

- PC board jack, RJ45, unshielded
- multi port 1x4, top entry, with 8 contacts
- solderable, color metal
- L x W x H 16.2 mm x 55.4 mm x 16.2 mm
- bottom latch

Dimensional drawing

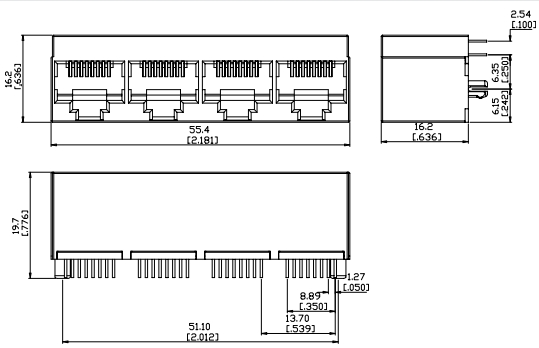

P/N	Color	Feature 1	Feature 2	EAN
AJT47C8841	metallike	6 µ" Au		4250184163091

AJT92B8813 | Magnetics 10/100 MBit

- PC board jack, RJ45, shielded
- single port, side entry, with 8 contacts
- solderable
- L x W x H 25.4 mm x 16.13 mm x 13.79 mm
- top latch
- 50 μ" Au

Drill pattern

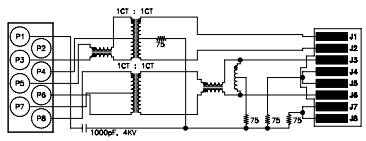

Drill pattern

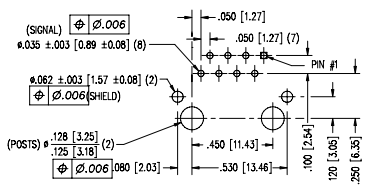

Dimensional drawing

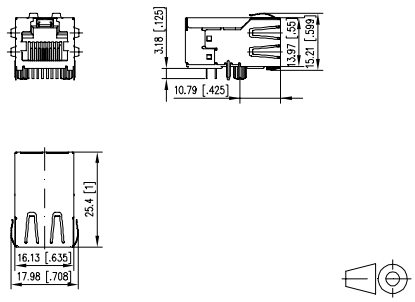

P/N	Color	Feature 1	Feature 2	
AJT92B8813		horizontal	10/100 MBit	

AJT92BC813 | Magnetics 1 GBit

- PC board jack, RJ45, shielded
- single port, side entry, with 8 contacts
- solderable
- L x W x H 30.48 mm x 16.79 mm x 13.61 mm
- top latch
- 50 μ" Au

Drill pattern

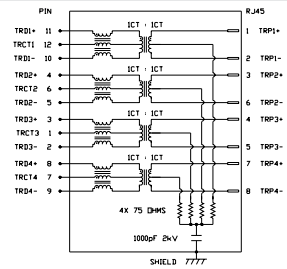

Drill pattern

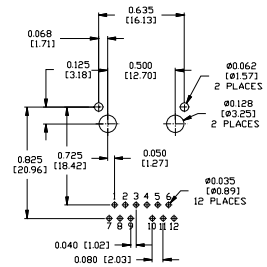

Dimensional drawing

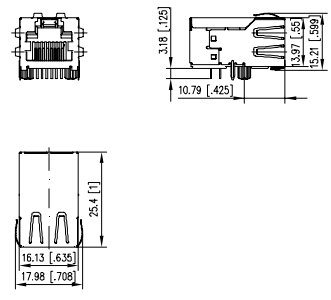

P/N	Color	Feature 1	Feature 2	
AJT92BC813		horizontal	1 GBit	

AJT65B

- PC board jack, RJ45, shielded
- single port, side entry, with 8 contacts
- solderable, color metal
- L x W x H 21.2 mm x 15.9 mm x 13.6 mm
- bottom latch
- Variants: 30 µ" Au, 50 µ" Au

Dimensional drawing

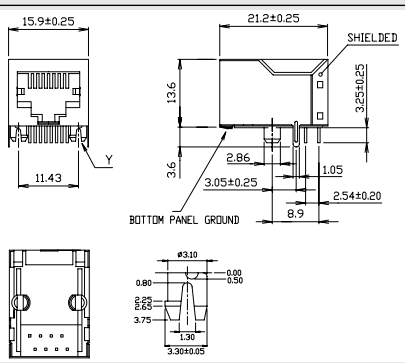

P/N	Color	Feature 1	Feature 2	EAN
AJT65B8813	metallike	30 µ" Au		4250184163114
AJT65B8814	metallike	50 µ" Au		4250184163121

AJT94B

- PC board jack, RJ45, shielded
- single port, side entry, with 8 contacts
- solderable, color metal
- L x W x H 13.4 mm x 15.9 mm x 14.8 mm
- top latch
- 30 µ" Au

Drill pattern

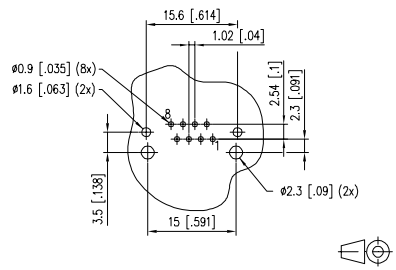

Dimensional drawing

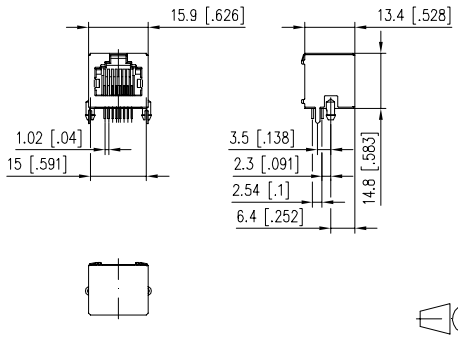

P/N	Color	Feature 1	Feature 2	EAN
AJT94B8813	metallike	30 µ" Au		4250184174592

AJT75B, 10P/8C

- PC board jack, RJ45, shielded
- single port, side entry, with 8 contacts
- solderable, color metal
- L x W x H 18.80 mm x 15.90 mm x 12.25 mm
- bottom latch

Dimensional drawing

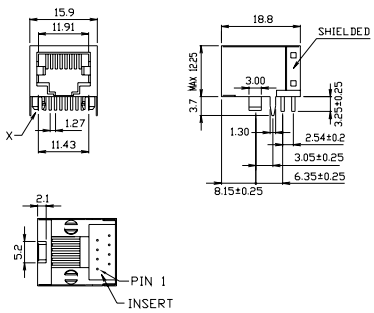

P/N	Color	Feature 1	Feature 2	EAN
AJT75BA813	metallike	10P/8C	30 µ" Au	4250184163138

AJT75B, 10P/10C

- PC board jack, RJ45, shielded
- single port, side entry, with 10 contacts
- solderable, color metal
- L x W x H 18.80 mm x 15.70 mm x 12.25 mm
- bottom latch

Dimensional drawing

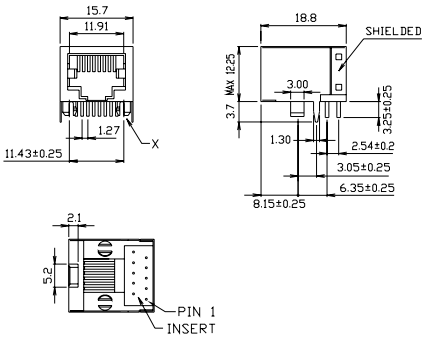

P/N	Color	Feature 1	Feature 2	EAN
AJT75BAA13	metallike	10P/10C	30 µ" Au	4250184163152

AJS58B

- PC board jack, RJ45, shielded
- single port, side entry, with 8 contacts
- solderable (SMT), color metal
- L x W x H 18.60 mm x 15.60 mm x 11.80 mm
- bottom latch

Drill pattern

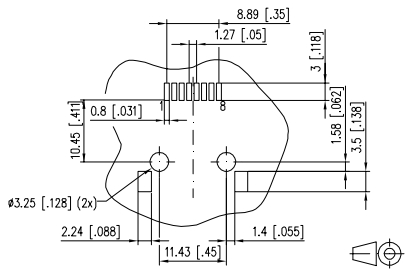

Dimensional drawing

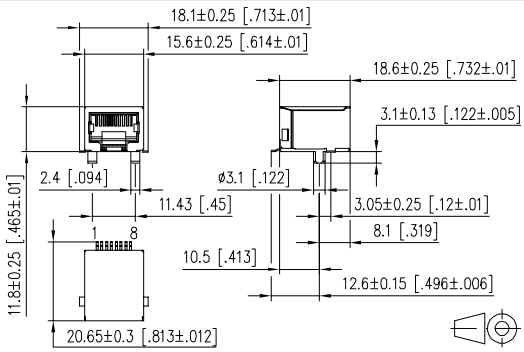

P/N	Color	Feature 1	Feature 2	EAN
AJS58BA811	metallike	6 µ" Au		4250184163169

AJS59L

- PC board jack, RJ45, shielded
- single port, side entry, with 8 contacts
- solderable (SMT), color black
- L x W x H 14.99 mm x 15.75 mm x 12.76 mm
- LED, green/yellow, top latch
- Varianten: 6µ" Au, 30 µ" Au, Tape & Reel

Drill pattern

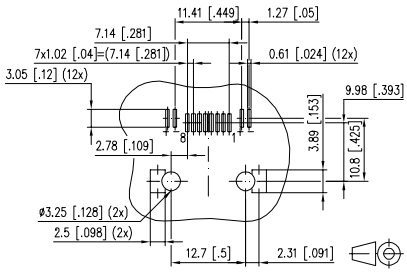

Dimensional drawing

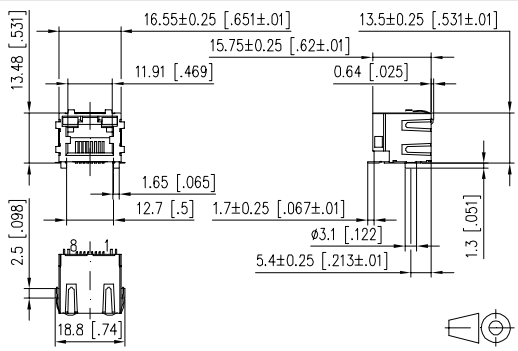

P/N	Color	Feature 1	Feature 2	EAN
AJS59L8811-0312	black	Tape & Reel	6 µ" Au	4250184172093
AJS59L8813-0312	black	Tape & Reel	30 µ" Au	4250184172109

AJT93B

- PC board jack, RJ45, shielded
- single port, top entry, with 8 contacts
- solderable (THR), color metal
- L x W x H 16.7 mm x 16.2 mm x 16.4 mm
- bottom latch

Drill pattern

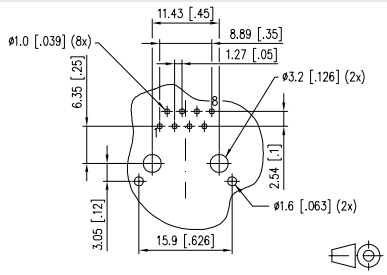

Dimensional drawing

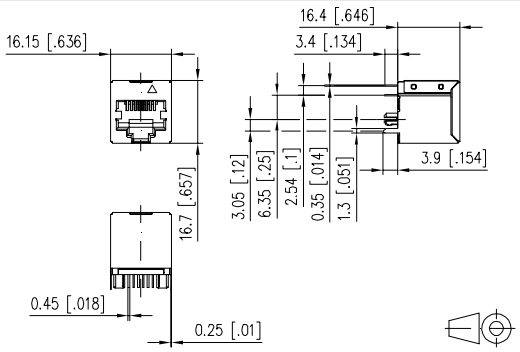

P/N	Color	Feature 1	Feature 2	EAN
AJT93B8813	metallike	30 µ Au		4250184169437

AJT74B

- PC board jack, RJ45, shielded
- single port, top entry, with 8 contacts
- solderable, color metal
- L x W x H 16.70 mm x 16.15 mm x 16.50 mm
- top latch
- Variants: 30 µ" Au, 50 µ" Au

Dimensional drawing

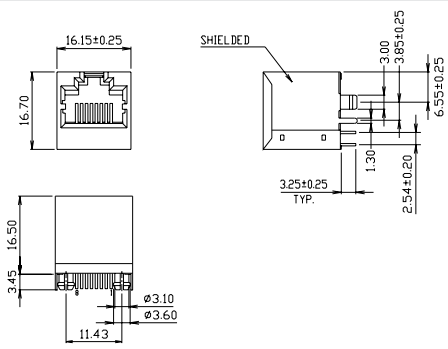

P/N	Color	Feature 1	Feature 2	EAN
AJT74B8813	metallike	30 µ" Au		4250184163176
AJT74B8814	metallike	50 µ" Au		4250184163183

AJT01B

- PC board jack, RJ45, shielded
- single port, top entry, with 8 contacts
- solderable (THR), color metal
- L x W x H 16.70 mm x 16.15 mm x 16.50 mm
- top latch
- Variants: 30 µ" Au, 50 µ" Au

Drill pattern

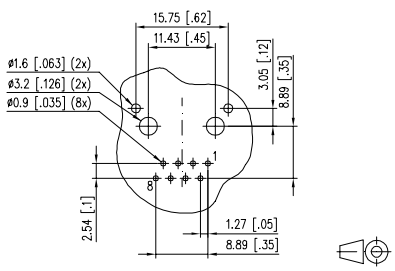

Dimensional drawing

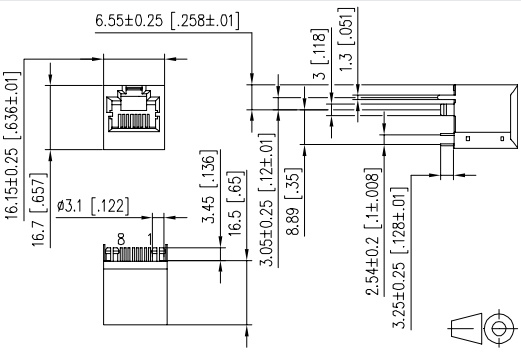

P/N	Color	Feature 1	Feature 2	EAN
AJT01B8813	metallike	30 µ" Au		4250184174080

AJT47D

- PC board jack, RJ45, shielded
- multi port 1x4, side entry, with 8 contacts
- solderable, color metal
- L x W x H 59.10 mm x 21.35 mm x 13.80 mm
- bottom latch

Drill pattern

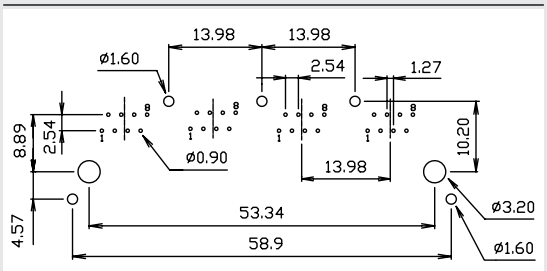

Dimensional drawing

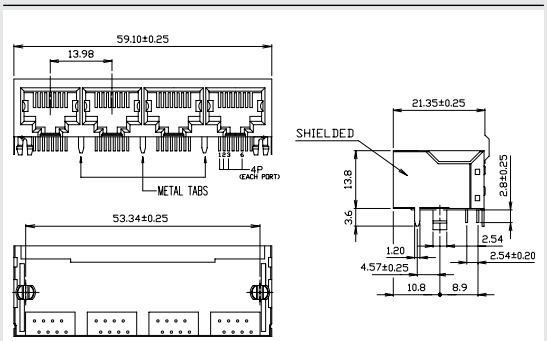

P/N	Color	Feature 1	Feature 2	EAN
AJT47D8843-003	metallike	30 µ" Au		4250184163190

AJT93D

- PC board jack, RJ45, shielded
- multi port 1x2, side entry, with 8 contacts
- solderable, color metal
- L x W x H 31.1 mm x 21.2 mm x 13.5 mm
- bottom latch
- 30 µ" Au

Drill pattern

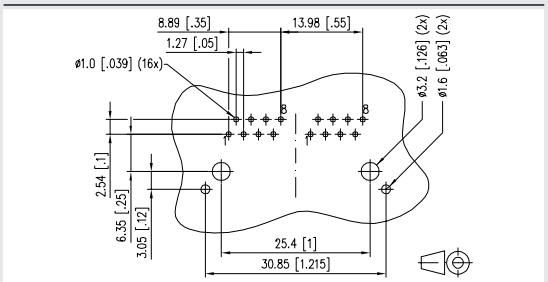

Dimensional drawing

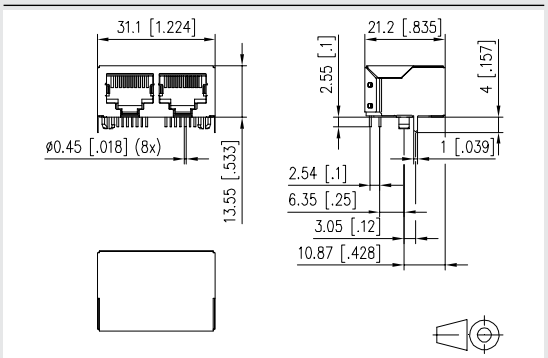

P/N	Color	Feature 1	Feature 2	EAN
AJT93DA823	metallike	30 µ" Au		4250184169444

AJT48D

- PC board jack, RJ45, shielded
- multi port 2x1, side entry, with 8 contacts
- solderable, color metal
- L x W x H 28.60 mm x 17.25 mm x 25.30 mm

Dimensional drawing

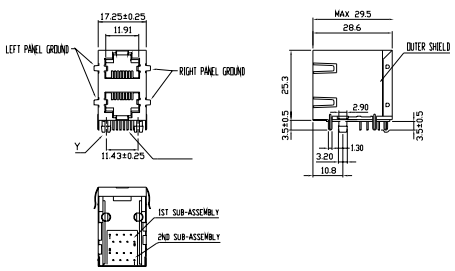

P/N	Color	Feature 1	Feature 2	EAN
AJT48D8824	metallike			4250184163206

AJT49D

- PC board jack, RJ45, shielded
- multi port 2x2, side entry, with 8 contacts
- solderable, color metal
- L x W x H 28.60 mm x 31.25 mm x 25.30 mm
- Variants: 4 port 30 μ" Au, 8 port 30 μ" Au, 8 port 50 μ" Au, 16 port 30 μ" Au

Dimensional drawing

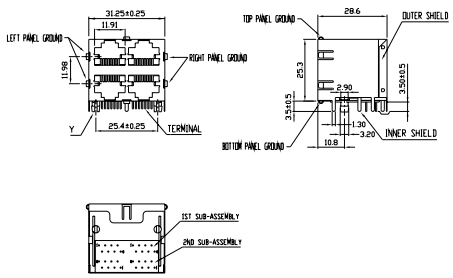

P/N	Color	Feature 1	Feature 2	EAN
AJT49D8843	metallike	4 port	30 μ" Au	4250184163213
AJT49D8883	metallike	8 port	30 μ" Au	4250184163220
AJT49D8884	metallike	8 port	50 μ" Au	4250184163237
AJT49D88G3	metallike	16 port	30 μ" Au	4250184163244

AJT46D

- PC board jack, RJ45, shielded
- multi port 2x4, top entry, with 8 contacts
- solderable, color metal
- L x W x H 27.4 mm x 57.2 mm x 16.5 mm

AJT52D

- PC board jack, RJ45, shielded
- multi port 1x4, top entry, with 8 contacts
- solderable, color metal
- L x W x H 16.70 mm x 55.90 mm x 16.40 mm
- bottom latch

Drill pattern

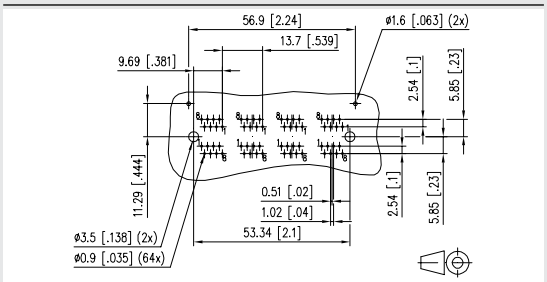

Dimensional drawing

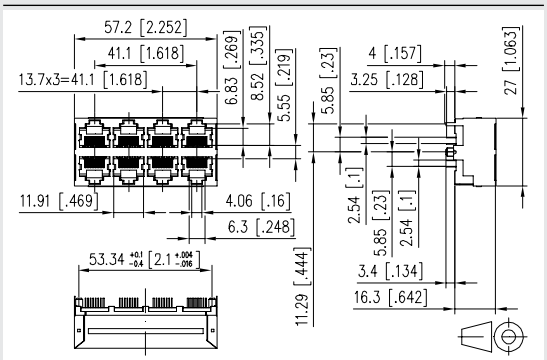

Dimensional drawing

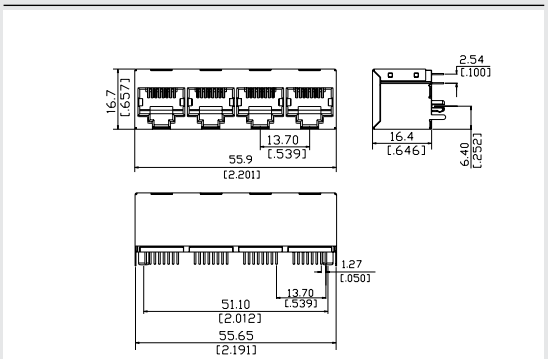

P/N	Color	Feature 1	Feature 2	EAN
AJT46D8883	metallike	30 µ" Au		4250184163251

P/N	Color	Feature 1	Feature 2	EAN
AJT52D8843	metallike	30 µ" Au		4250184163268

AJT18L

- PC board jack, RJ45, unshielded
- single port, side entry, with 8 contacts
- solderable, color black
- L x W x H 15.00 mm x 15.80 mm x 13.21 mm
- LED, yellow/green, top latch
- Variants: LED yellow/green, green/green, green/yellow

Dimensional drawing

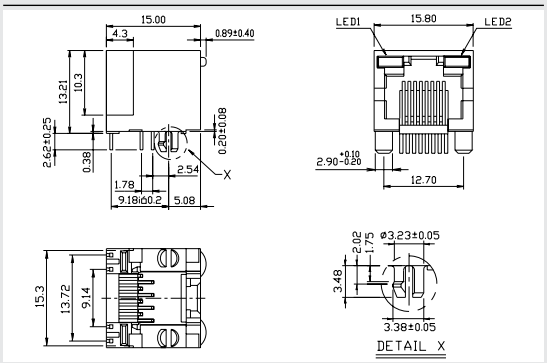

P/N	Color	Feature 1	Feature 2	EAN
AJT18L8813-010	black	LED yellow/ green	30 µ" Au	4250184163275
AJT18L8813-020	black	LED green/ green	30 µ" Au	4250184163282
AJT18L8813-030	black	LED green/ yellow	30 µ" Au	4250184163299

AJT31L

- PC board jack, RJ45, unshielded
- single port, side entry, with 8 contacts
- solderable, color black
- L x W x H 20.65 mm x 15.24 mm x 13 mm
- LED, yellow/green, bottom latch

Dimensional drawing

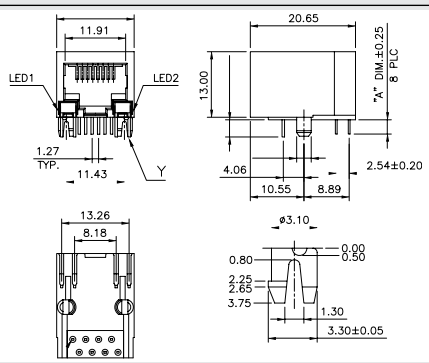

P/N	Color	Feature 1	Feature 2	EAN
AJT31L8811-01	black	6 µ" Au		4250184163305

AJT40L

- PC board jack, RJ45, unshielded
- single port, top entry, with 8 contacts
- solderable, color black
- L x W x H 16.10 mm x 15.00 mm x 16.20 mm
- LED, green/yellow, bottom latch

Dimensional drawing

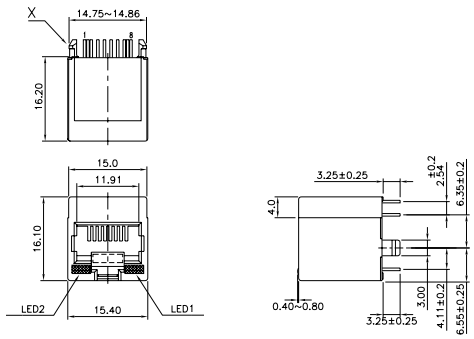

P/N	Color	Feature 1	Feature 2	EAN
AJT40L8813-030	black	30 µ" Au		4250184163312

AJT36L

- PC board jack, RJ45, unshielded
- multi port 2x4, side entry, with 8 contacts
- solderable, color black
- L x W x H 27.38 mm x 63.00 mm x 25.15 mm
- LED, red/green

Dimensional drawing

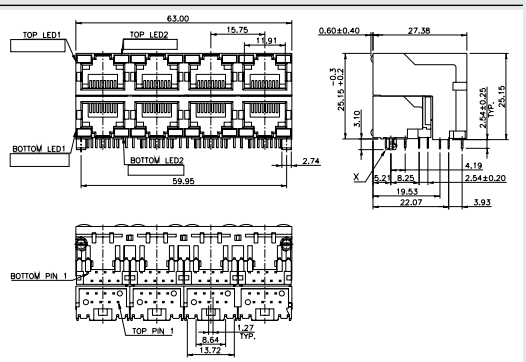

P/N	Color	Feature 1	Feature 2	EAN
AJT36L8883-090	black	30 µ" Au		4250184163329

AJT32L

- PC board jack, RJ45, unshielded
- multi port 1x4, top entry, with 8 contacts
- solderable, color black
- L x W x H 12.57 mm x 62.99 mm x 15.57 mm
- LED, yellow/green, top latch

Dimensional drawing

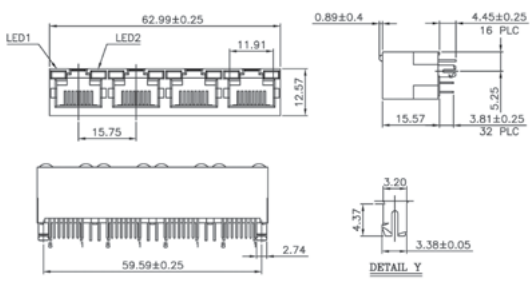

P/N	Color	Feature 1	Feature 2	EAN
AJT32L8841-010	black	6 µ" Au		4250184163350

AJT33L

- PC board jack, RJ45, shielded
- single port, side entry, with 8 contacts
- solderable, color metal
- L x W x H 21.20 mm x 15.90 mm x 13.60 mm
- LED, red/green, bottom latch
- Variants: LED yellow/green, red/green

Dimensional drawing

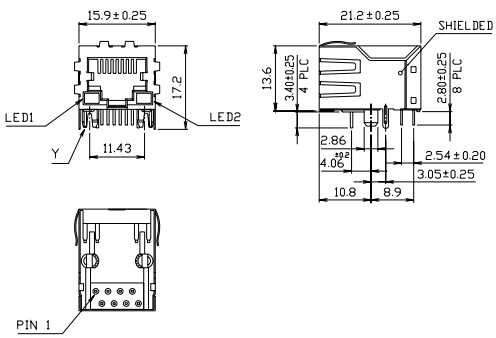

P/N	Color	Feature 1	Feature 2	EAN
AJT33L8813-014	metallike	LED yellow/ green	30 µ" Au	4250184163374
AJT33L8813-064	metallike	LED red/green	30 µ" Au	4250184163381

AJT34L

- PC board jack, RJ45, shielded
- single port, side entry, with 8 contacts
- solderable, color metal
- L x W x H 15.75 mm x 16.51 mm x 13.55 mm
- LED, yellow/green, top latch
- Variants: LED yellow/green, green/yellow - each top & side tabs and no tabs and 30 µ" Au

Dimensional drawing

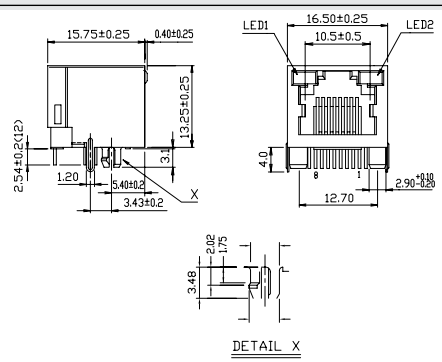

P/N	Color	Feature 1	Feature 2	EAN
AJT34L8813-011	metallike	LED yellow/ green	no tabs	4250184163404
AJT34L8813-014	metallike	LED yellow/ green	top & side tabs	4250184163411
AJT34L8813-034	metallike	LED green/ yellow	top & side tabs	4250184163428
AJT34L8814-031	metallike	LED green/ yellow	no tabs	4250184163435

AJT38L

- PC board jack, RJ45, shielded
- single port, top entry, with 8 contacts
- solderable, color metal
- L x W x H 13.5 mm x 16.5 mm x 15.8 mm
- LED, yellow/green, top latch

Dimensional drawing

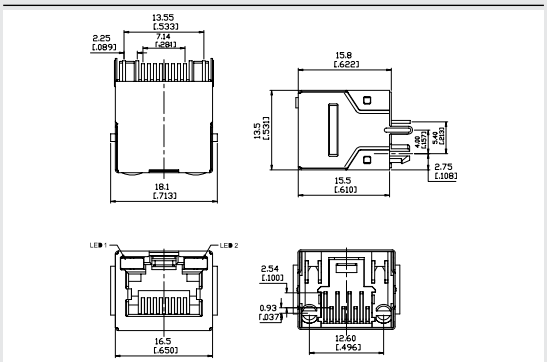

P/N	Color	Feature 1	Feature 2	EAN
AJT38L8813-011	metallike	30 µ" Au		4250184163466

AJT39L

- PC board jack, RJ45, shielded
- single port, top entry, with 8 contacts
- solderable, color metal
- L x W x H 16.70 mm x 16.15 mm x 16.50 mm
- LED, yellow/green, bottom latch
- Variants: LED yellow/green, green/green, green/yellow - each 30 µ" Au

Dimensional drawing

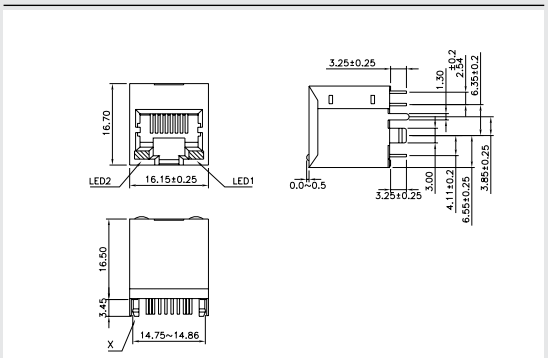

P/N	Color	Feature 1	Feature 2	EAN
AJT39L8813-021	metallike	LED green/ green	top & side tabs	4250184163473
AJT39L8813-031	metallike	LED green/ yellow	top & side tabs	4250184163480

AJT35L

- PC board jack, RJ45, shielded
- multi port 1x2, side entry, with 8 contacts
- solderable, color metal
- L x W x H 15.75 mm x 32.26 mm x 13.30 mm
- LED, green/yellow, top latch

Dimensional drawing

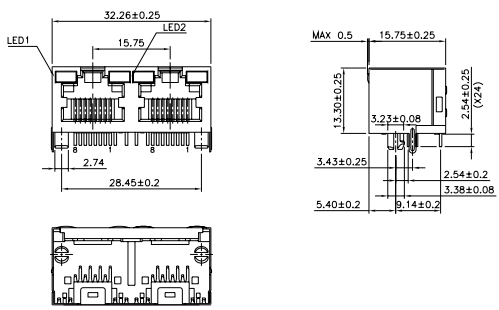

P/N	Color	Feature 1	Feature 2	EAN
AJT35L8824-031	metallike	50 µ" Au		4250184163497

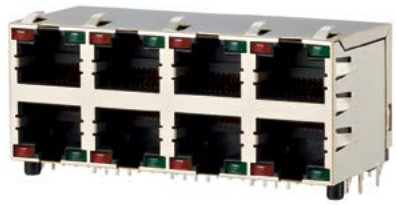

AJT37L

- PC board jack, RJ45, shielded
- multi port 2x4, side entry, with 8 contacts
- solderable, color metal
- L x W x H 28.15 mm x 63.65 mm x 25.40 mm
- LED, red/green, top and bottom

Drill pattern

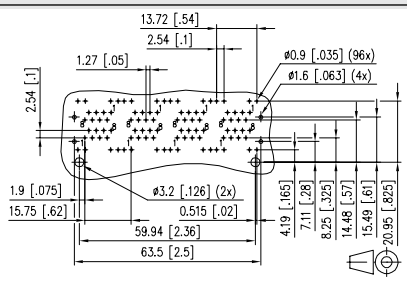

Dimensional drawing

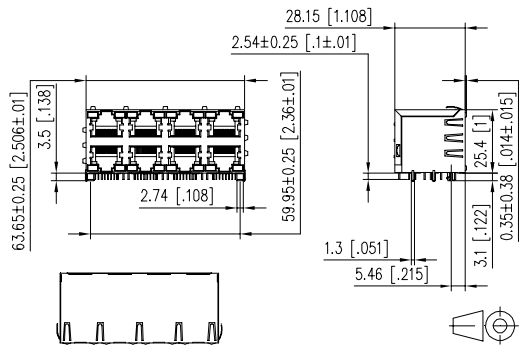

P/N	Color	Feature 1	Feature 2	EAN
AJT37L8884-094	metallike	50 µ" Au		4250184163503

AJT41L

- PC board jack, RJ45, shielded
- multi port 1x4, side entry, with 8 contacts
- solderable, color metal
- L x W x H 15.75 mm x 63.76 mm x 13.3 mm
- LED, yellow/green, top latch

Dimensional drawing

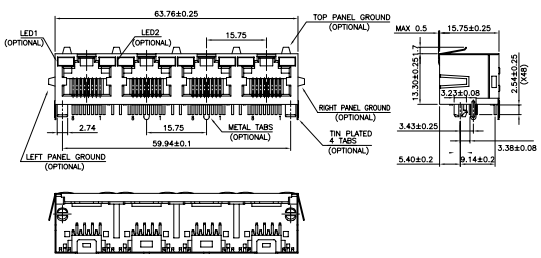

P/N	Color	Feature 1	Feature 2	EAN
AJT41L8841-011	metallike	6 µ" Au		4250184163510

AJT43L

- PC board jack, RJ45, shielded
- multi port 1x8, side entry, with 8 contacts
- solderable, color metal
- L x W x H 15.75 mm x 126.7 mm x 13.3 mm
- LED, yellow/green, top latch

Dimensional drawing

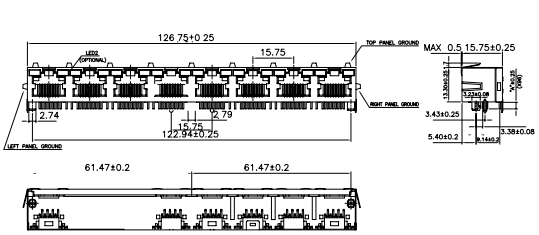

P/N	Color	Feature 1	Feature 2	EAN
AJT43L8881-011	metallike	6 µ" Au		4250184163527

AJT44L

- PC board jack, RJ45, shielded
- multi port 2x1, side entry, with 8 contacts
- solderable, color metal
- L x W x H 28.15 mm x 16.51 mm x 25.4 mm
- LED, yellow/green

Dimensional drawing

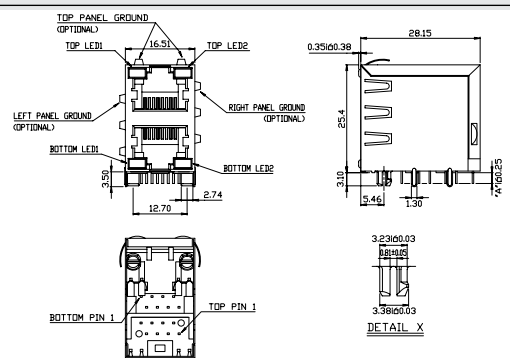

P/N	Color	Feature 1	Feature 2	EAN
AJT44L8821-014	metallike	6 µ" Au		4250184163534

AJP92A

- PC board plug, RJ45, unshielded
- single port, top entry, with 8 contacts
- solderable
- L x W x H 6.6 mm x 11.7 mm x 11 mm

Drill pattern

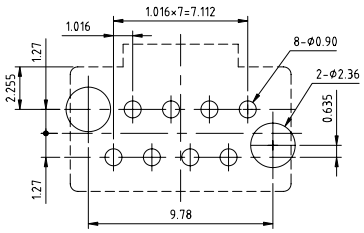

Dimensional drawing

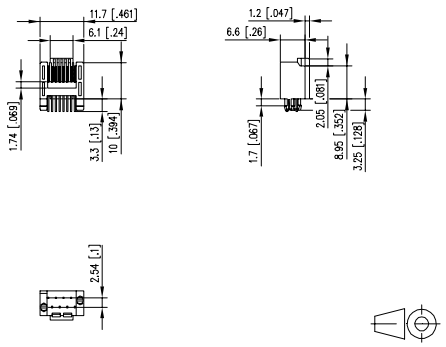

P/N	Color	Feature 1	Feature 2	
AJP92A8813				

AJT85A

- PC board jack, RJ12, unshielded
- single port, side entry, with 6 contacts
- solderable, color black
- L x W x H 18.00 mm x 13.20 mm x 11.50 mm
- bottom latch
- Variants: 30 µ" Au, 50 µ" Au

Dimensional drawing

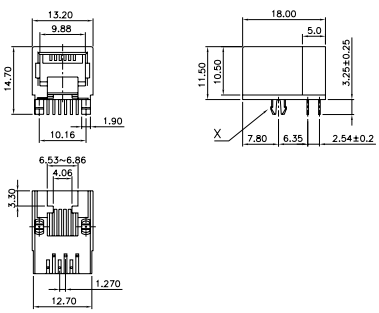

P/N	Color	Feature 1	Feature 2	EAN
AJT85A6613	black	30 µ" Au		4250184163541

AJT87A

- PC board jack, RJ12, unshielded
- single port, side entry, with 6 contacts
- solderable, color black
- L x W x H 15 mm x 14.2 mm x 14.35 mm
- top latch
- Variants: black inlay, gray inlay

Dimensional drawing

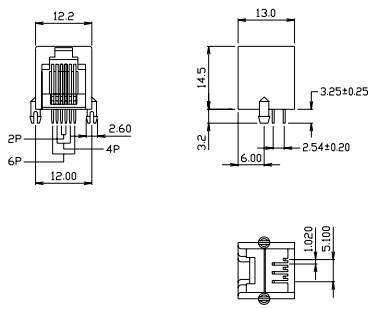

P/N	Color	Feature 1	Feature 2	EAN
AJT87A6612	black	inlay black		4250184163565
AJT87A6611-041	black	inlay gray	6 µ" Au	4250184163572

AJS57A

- PC board jack, RJ12, unshielded
- single port, side entry, with 6 contacts
- solderable (SMT), color black
- L x W x H 18 mm x 13.2 mm x 11.5 mm
- bottom latch

Dimensional drawing

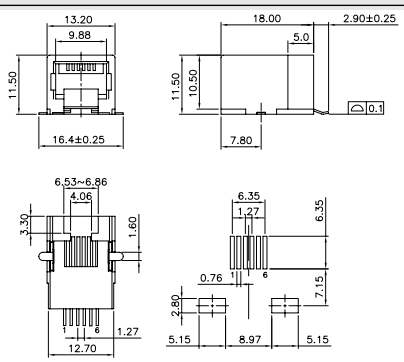

P/N	Color	Feature 1	Feature 2	EAN
AJS57A6613	black	30 µ" Au		4250184163602

AJT84A

- PC board jack, RJ12, unshielded
- single port, top entry, with 6 contacts
- solderable, color black
- L x W x H 16.10 mm x 15.34 mm x 16.20 mm
- top latch

Dimensional drawing

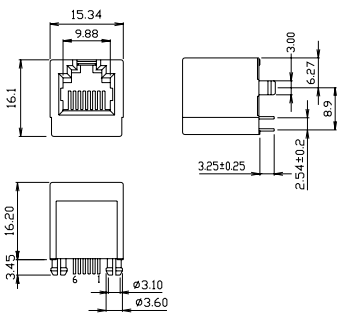

P/N	Color	Feature 1	Feature 2	EAN
AJT84A6613	black	30 µ" Au		4250184163558

AJS55A

- PC board jack, RJ12, unshielded
- single port, top entry, with 6 contacts
- solderable (SMT), color black
- L x W x H 11.90 mm x 13.21 mm x 14.00 mm
- top latch
- Variants: 6 µ" Au, 30 µ" Au

Dimensional drawing

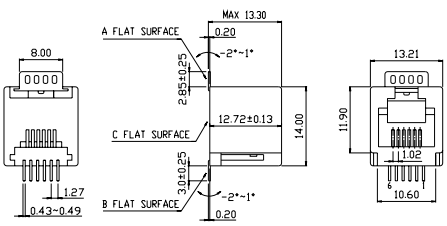

P/N	Color	Feature 1	Feature 2	EAN
AJS55A6611	black	6 µ" Au		4250184163619
AJS55A6613	black	30 µ" Au		4250184163626

AJT46C

- PC board jack, RJ12, unshielded
- multi port 1x2, side entry, with 6 contacts
- solderable, color black
- L x W x H 16.70 mm x 25.00 mm x 12.70 mm
- top latch

Dimensional drawing

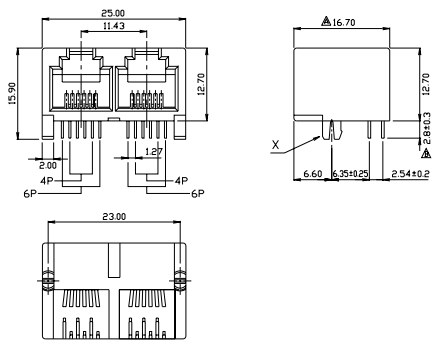

P/N	Color	Feature 1	Feature 2	EAN
AJT46C6623	black	30 µ" Au		4250184163633

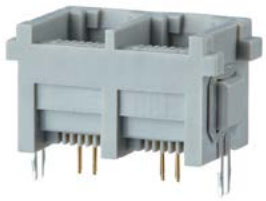

AJT43C 1x2 Port

- PC board jack, RJ12, unshielded
- multi port 1x2, top entry, with 4 contacts
- solderable, color black
- L x W x H 16.00 mm x 28.00 mm x 15.40 mm
- top latch

Dimensional drawing

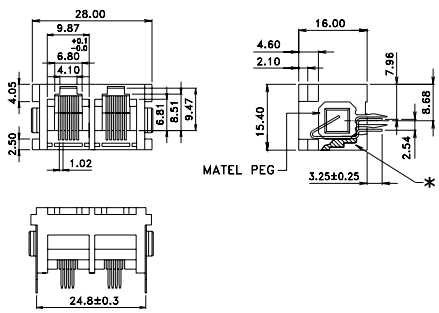

P/N	Color	Feature 1	Feature 2	EAN
AJT43C6421	black	2 port	6P/4C	4250184163657

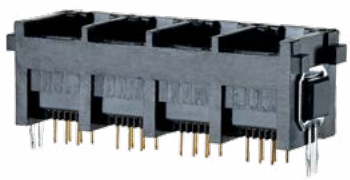

AJT43C 1x4 Port

- PC board jack, RJ12, unshielded
- multi port 1x4, top entry, with 6 contacts
- solderable, color black
- L x W x H 16.00 mm x 50.00 mm x 15.40 mm
- top latch

Drill pattern

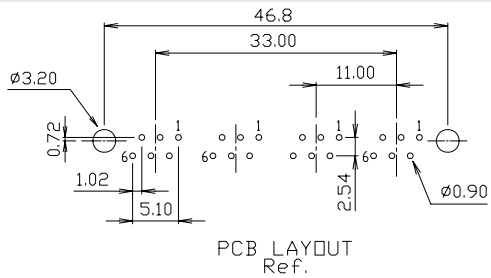

Dimensional drawing

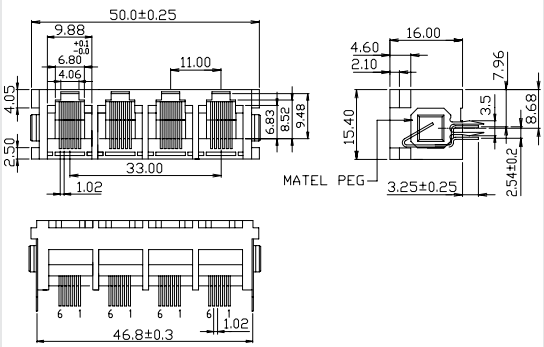

P/N	Color	Feature 1	Feature 2	EAN
AJT43C6642-001	black	4 port	6P/6C	4250184163688

AJS55A

- PC board jack, RJ11, unshielded
- single port, top entry, with 4 contacts
- solderable (SMT), color black
- L x W x H 14.00 mm x 11.10 mm x 12.72 mm
- top latch

Dimensional drawing

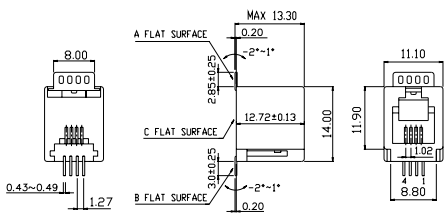

P/N	Color	Feature 1	Feature 2	EAN
AJS55A4411	black	6 µ" Au		4250184163695

AJT87A

- PC board jack, RJ11, unshielded
- single port, side entry, with 4 contacts
- solderable, color black
- L x W x H 13.00 mm x 10.00 mm x 14.50 mm
- top latch

Dimensional drawing

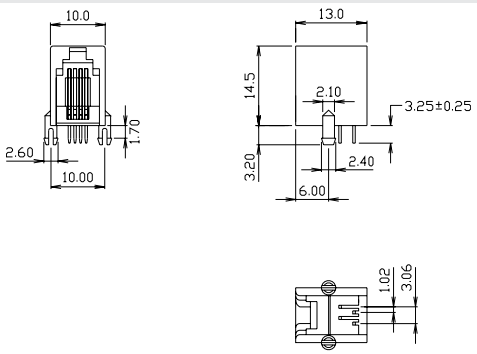

P/N	Color	Feature 1	Feature 2	EAN
AJT87A4411	black	6 µ" Au		4250184163718

AJT21G

- PC board jack, USB A, shielded
- single port, side entry, with 4 contacts
- solderable, color metal
- L x W x H 14.50 mm x 14.30 mm x 7.00 mm

Dimensional drawing

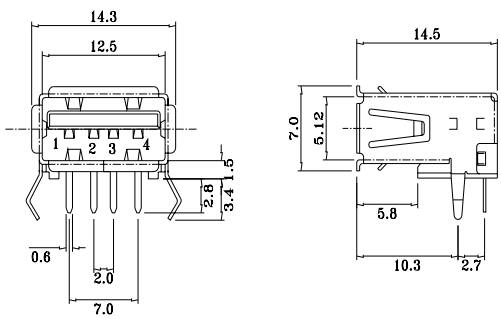

P/N	Color	Feature 1	Feature 2	EAN
AJT21G4413-001	metallike	30 µ" Au		4250184163756

AJT24G

- PC board jack, USB A, shielded
- single port, side entry, with 4 contacts
- solderable, color metal
- L x W x H 19.30 mm x 7.00 mm x 13.30 mm

Dimensional drawing

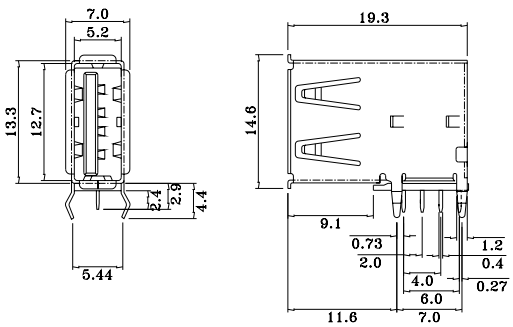

P/N	Color	Feature 1	Feature 2	EAN
AJT24G4413-001	metallike	30 µ" Au		4250184163817

AJT25G

- PC board jack, USB A, shielded
- multi port 2x1, side entry, with 4 contacts
- solderable, color metal
- L x W x H 17.00 mm x 15.10 mm x 13.80 mm

Dimensional drawing

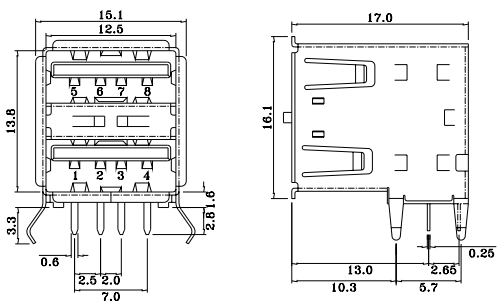

P/N	Color	Feature 1	Feature 2	EAN
AJT25G4423-001	metallike	30 µ" Au		4250184163824

AJT33G

- PC board jack, USB A, shielded
- single port, side entry, 9
- solderable, color metal
- L x W x H 16.5 mm x 13.9 mm x 7.12 mm

Dimensional drawing

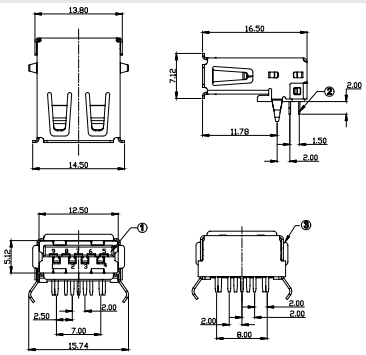

P/N	Color	Feature 1	Feature 2	EAN
AJT33G9913-001	metallike	30 µ" Au		4250184163831

AJS05G

- PC board jack, USB A, shielded
- single port, side entry, with 4 contacts
- solderable (SMT), color metal
- L x W x H 14.4 mm x 14.3 mm x 7.0 mm

Dimensional drawing

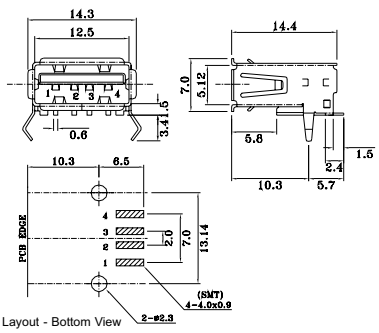

PC Board Layout - Bottom View

P/N	Color	Feature 1	Feature 2	EAN
AJS05G4413-001	metallike			4250184163848
AJS05G4413-005	metallike			4250184163855

AJT20G

- PC board jack, USB A, shielded
- single port, top entry, with 4 contacts
- solderable, color metal
- L x W x H 15.00 mm x 14.40 mm x 7.00 mm

Dimensional drawing

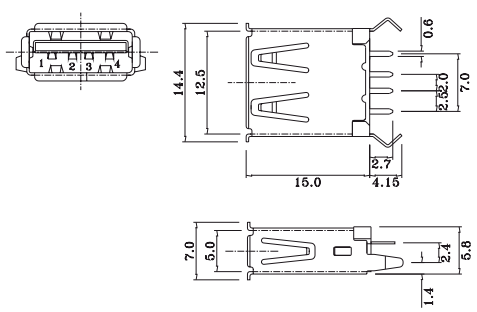

P/N	Color	Feature 1	Feature 2	EAN
AJT20G4413-001	metallike	30 µ" Au		4250184163886

AJT27G

- PC board jack, USB A, shielded
- multi port 2x1, top entry, with 4 contacts
- solderable, color metal
- L x W x H 13.80 mm x 14.80 mm x 16.30 mm

Dimensional drawing

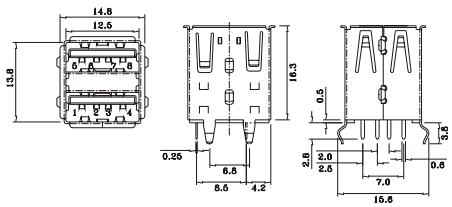

P/N	Color	Feature 1	Feature 2	EAN
AJT27G4423-001	metallike	30 µ" Au		4250184163893

AJT29G

- PC board jack, Mini USB B, shielded
- single port, side entry, with 5 contacts
- solderable, color metal
- L x W x H 9.60 mm x 7.70 mm x 3.90 mm

Dimensional drawing

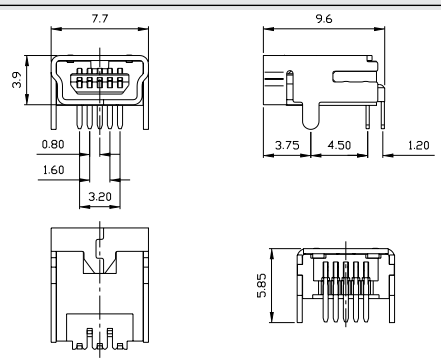

P/N	Color	Feature 1	Feature 2	EAN
AJT29G5513-001	metallike	30 µ" Au		4250184163909

AJT30G

- PC board jack, USB B, shielded
- single port, side entry, with 4 contacts
- solderable, color metal
- L x W x H 16.10 mm x 12.04 mm x 10.60 mm

Dimensional drawing

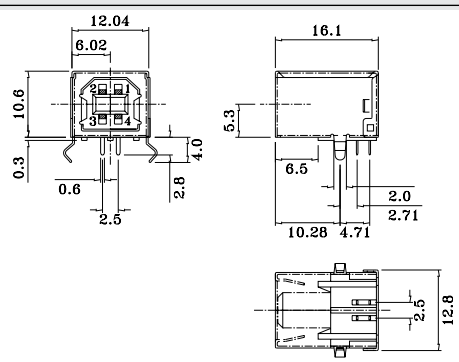

P/N	Color	Feature 1	Feature 2	EAN
AJT30G4413-001	metallike	30 µ" Au		4250184163916
AJT30G4413-002	metallike	30 µ" Au		4250184163923

AJS08G

- PC board jack, Mini USB B, shielded
- single port, side entry, with 5 contacts
- solderable (SMT), color metal
- L x W x H 9.20 mm x 7.70 mm x 3.90 mm

Dimensional drawing

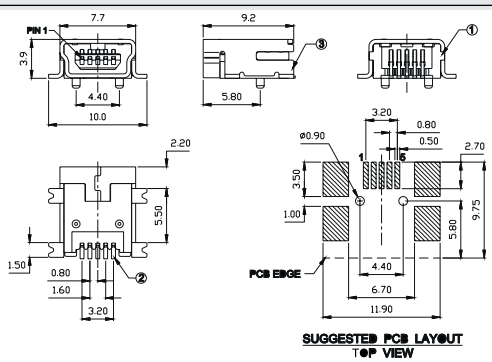

P/N	Color	Feature 1	Feature 2	EAN
AJS08G5513-001	metallike	30 µ" Au		4250184163947

AJS09G

- PC board jack, Mini USB B, shielded
- single port, side entry, with 4 contacts
- solderable (SMT)
- L x W x H 16.00 mm x 12 mm x 10.6 mm

Dimensional drawing

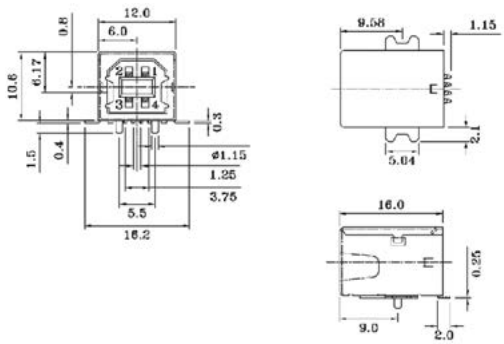

P/N	Color	Feature 1	Feature 2	EAN
AJS09G4413-001		30 µ" Au		4250184163985

AJS10G

- PC board jack, USB B, shielded
- single port, top entry, with 4 contacts
- solderable (SMT), color metal
- L x W x H 14.60 mm x 12.00 mm x 10.80 mm
- Variants: 30 μ" Au Tray Packing, 30 μ" Au Tape & Reel with Mylar Tape

Dimensional drawing

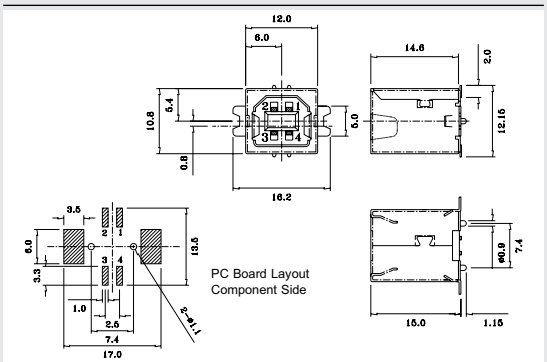

P/N	Color	Feature 1	Feature 2	EAN
AJS10G4413-001	metallike	Tray Packing		4250184164005
AJS10G4413-301	metallike	Tape & Reel	Mylar Tape	4250184164012

AJT14G

- PC board jack, USB B, shielded
- single port, top entry, with 4 contacts
- solderable, color metal
- L x W x H 11.15 mm x 12.00 mm x 15.55 mm

Dimensional drawing

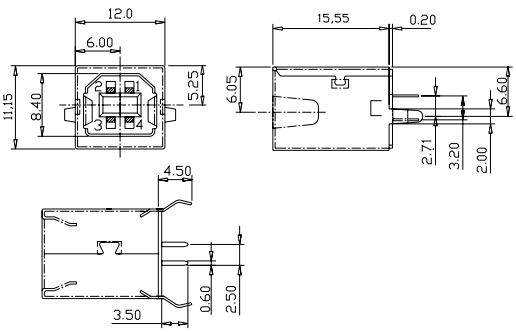

P/N	Color	Feature 1	Feature 2	EAN
AJT14G4413-001	metallike	30 μ" Au		4250184164029

Ethernet M12 PC board jacks

Description

The Ethernet M12 plug is an industrial plug that is used for the field level and for industrial Ethernet. It is a round plug connection with metric thread that has been developed in several versions and codings for different protection classes.
For applications in the electrically sensitive environment, fully shielded EMV-compliant versions are available. Here, the contact carrier is surrounded by a metallic shield sleeve that is connected firstly to the cable screen and secondly to the locking screw. This ensures that the shield connection is guided to the device housing via the plug connector. In addition, another feature is the high mechanical rigidity and resistance to mechanical influences and vibrations.

Ethernet M12 D-coded
PCB jack through hole mounting

Ethernet M12 X-coded
PCB jack frontside mounting

U | Contact

The plug connectors of this product series with a metric 12 mm thread are used today around the world in the area of automation and sensor technology. They are used for the transmission of data and signals.

Please note the new, structured and user-friendly product key for plug connectors. The new system describes the products according to their characteristics and thus creates transparency in the ordering and logistics processes.

Product key Ethernet M12 PC board jacks

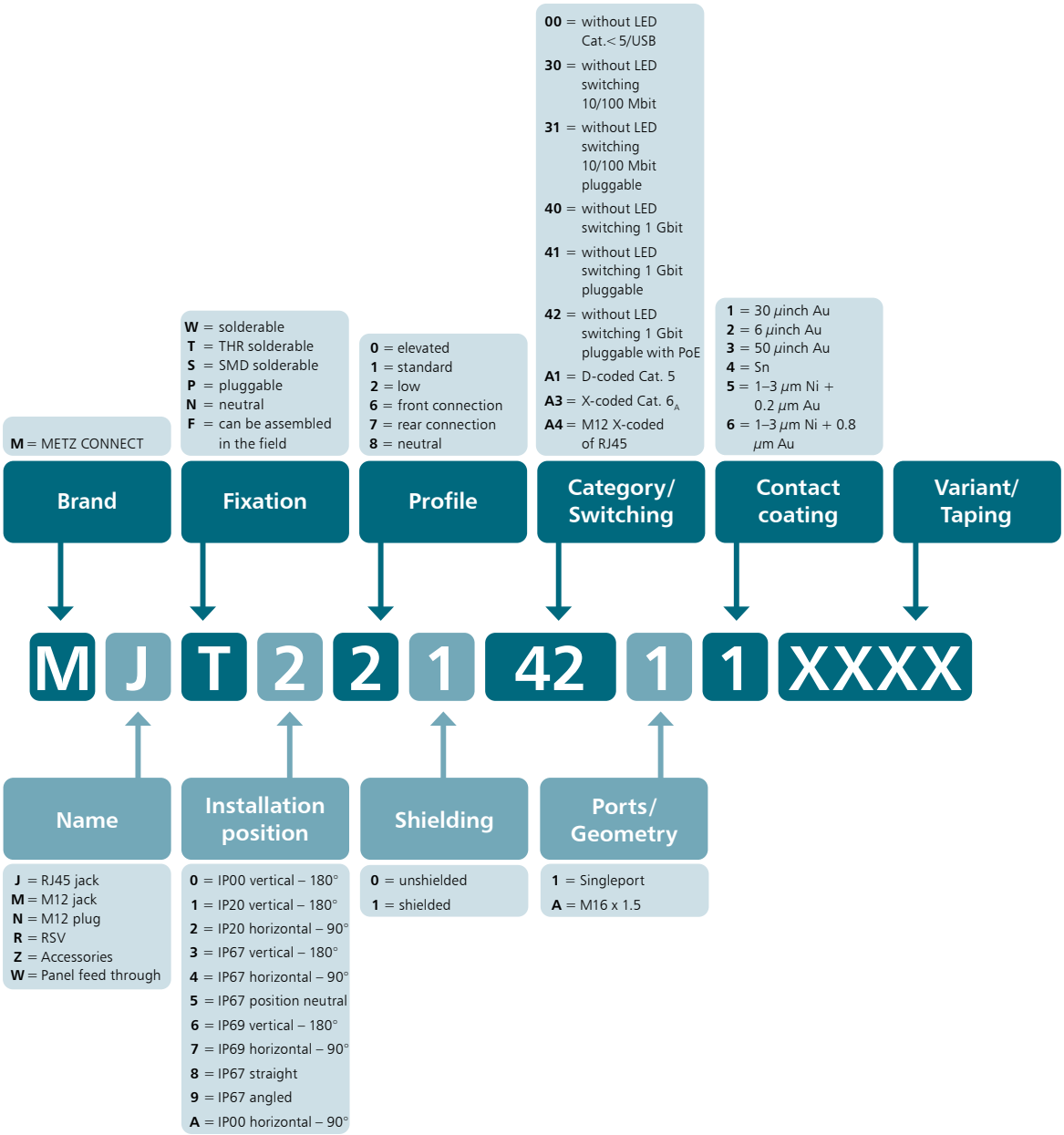

MMW360A1A1

- Ethernet M12 female connector for PC boards
- 4-pole, D-coded as per IEC 61076-02-101
- solderable
- front mounting
- green PC board insert for THR

Drill pattern

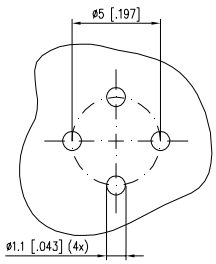

Dimensional drawing

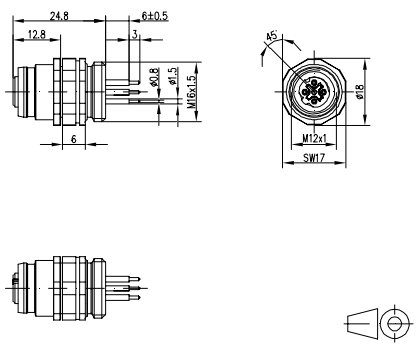

P/N	Color	Feature 1	Feature 2	EAN
MMW360A1A1	metallike	D-coded		4250184143116

MMW370A1A1

- Ethernet M12 female connector for PC boards
- 4-pole, D-coded as per IEC 61076-02-101
- solderable
- through hole mounting
- green PC board insert for THR

Drill pattern

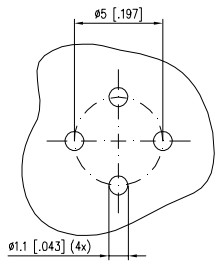

Dimensional drawing

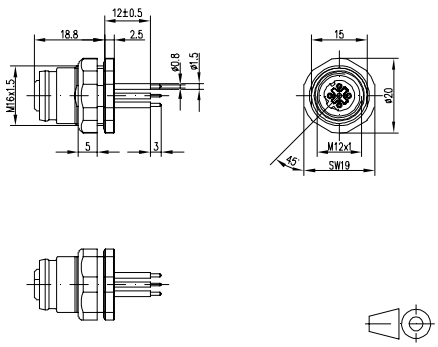

P/N	Color	Feature 1	Feature 2	EAN
MMW370A1A1	metallike	D-coded		4250184142584

MMT471A115

- Ethernet M12 jack for PC boards
- 4-pole, D-coded as per IEC 61076-02-101
- angled 90°
- solderable THR
- side entry
- protection degree IP67 in mated condition
- Variants: suitable for a wall thickness up to 2.5 mm, up to 4 mm, up to 5 mm

Drill pattern

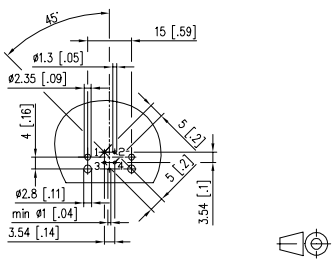

Dimensional drawing

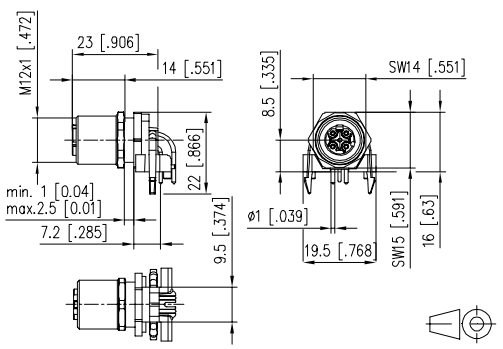

P/N	Color	Feature 1	Feature 2	EAN
MMT471A115	metallike	D-coded 90°	< 2.5 mm	4250184187967
MMT471A115-0001	metallike	D-coded 90°	< 4 mm	4250184187974
MMT471A115-0002	metallike	D-coded 90°	< 5 mm	4250184187981

MMT361A315

- Ethernet M12 jack Cat.6$_A$ for PC boards
- 8-pole, X-coded as per IEC 61076-02-109
- for 10 GBit Ethernet (IEEE 802.3an)
- solderable, THR
- top entry
- green PC board insert

Drill pattern

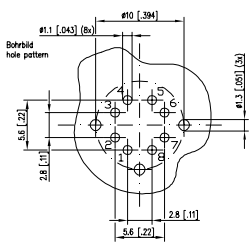

Dimensional drawing

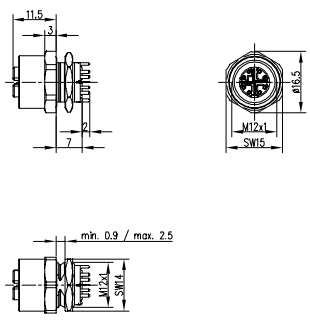

P/N	Color	Feature 1	Feature 2	EAN
MMT361A315	metallike	X-coded		4250184154891
MMT361A315-0001	metallike	X-coded	in individual parts	4250184154907

MMT371A3B5

- Ethernet M12 jack Cat.6$_A$ for PC boards
- 8-pole, X-coded as per IEC 61076-02-109
- rear wall mounting
- for 10 GBit Ethernet (IEEE 802.3an)
- solderable, THR
- top entry
- protection degree IP67 in mated condition

Drill pattern

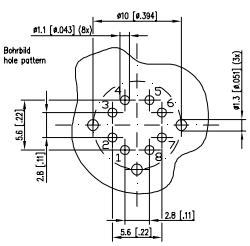

Dimensional drawing

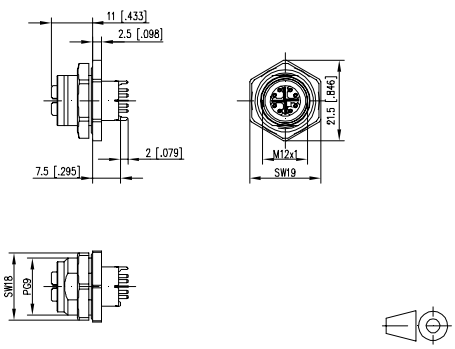

P/N	Color	Feature 1	Feature 2	EAN
MMT371A3B5	metallike	X-coded		4250184158493
MMT371A3B5-0001	metallike	X-coded	in individual parts	4250184158509

MMT060A315

- Ethernet M12 jack insert for PC boards
- 8-pole, X-coded as per IEC 61076-02-109
- for 10 GBit Ethernet (IEEE 802.3an)
- solderable (THR)
- top entry
- variants: green or black PC board insert

Drill pattern

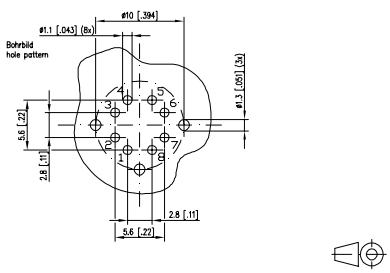

Dimensional drawing

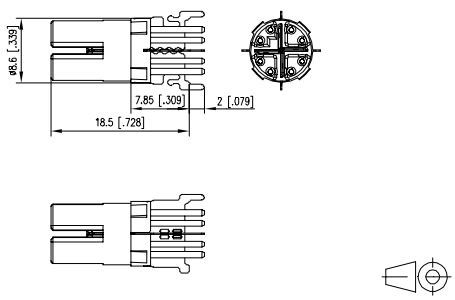

P/N	Color	Feature 1	Feature 2	EAN
MMT060A315	metallike	X-coded		4250184155256
MMT060A315-0001	black	X-coded		4250184158479

MMT471A315

- Ethernet M12 jack Cat.6$_A$ for PC boards
- 8-pole, X-coded as per IEC 61076-02-109
- angled 90°
- for 10 GBit Ethernet (IEEE 802.3an)
- solderable THR
- side entry
- protection degree IP67 in mated condition
- variants: suitable for a wall thickness up to 2.5 mm, up to 4 mm, up to 5 mm

Drill pattern

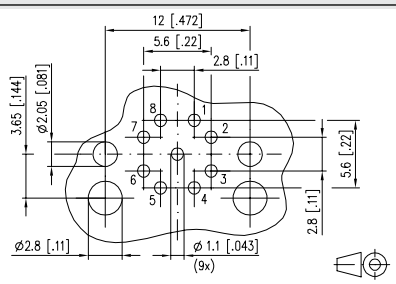

Dimensional drawing

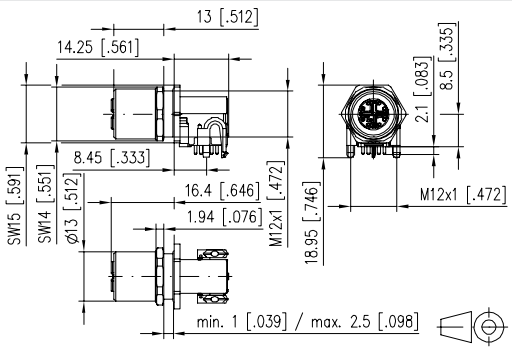

P/N	Color	Feature 1	Feature 2	EAN
MMT471A315	metallike	X-coded 90°	< 2.5 mm	4250184169475
MMT471A315-0001	metallike	X-coded 90°	< 4 mm	4250184169482
MMT471A315-0002	metallike	X-coded 90°	< 5 mm	4250184169499

MMT471A315 in individual parts

- Ethernet M12 jack Cat.6$_A$ for PC boards
- 8-pole, X-coded as per IEC 61076-02-109
- angled 90°
- for 10 GBit Ethernet (IEEE 802.3an)
- solderable THR
- side entry
- protection degree IP67 in mated condition
- in individual parts
- variants: suitable for a wall thickness up to 2.5 mm, up to 4 mm, up to 5 mm

Drill pattern

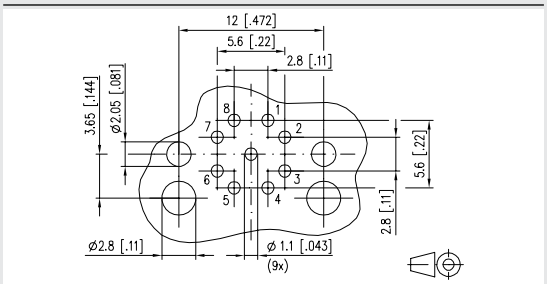

Dimensional drawing

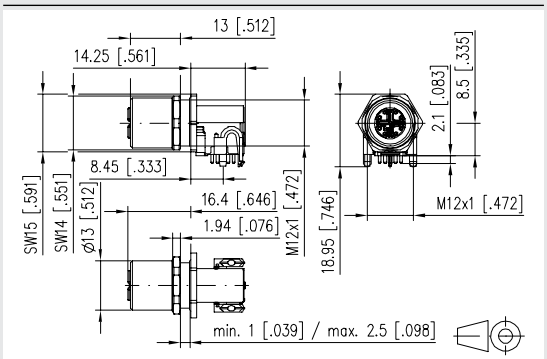

P/N	Color	Feature 1	Feature 2	EAN
MMT471A315-0003	metallike	X-coded 90°	< 2.5 mm, in individual parts	4250184169505
MMT471A315-0004	metallike	X-coded 90°	< 4 mm, in individual parts	4250184169512
MMT471A315-0005	metallike	X-coded 90°	< 5 mm, in individual parts	4250184169529

MMTA70A315

- Ethernet M12 jack insert for PC boards 90°
- 8-pole, X-coded as per IEC 61076-02-109
- for 10 GBit Ethernet (IEEE 802.3an)
- solderable (THR)
- side entry
- green PC board insert

Drill pattern

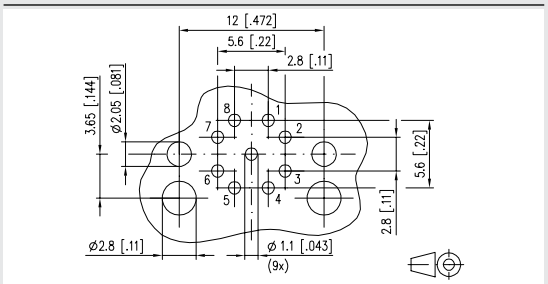

Dimensional drawing

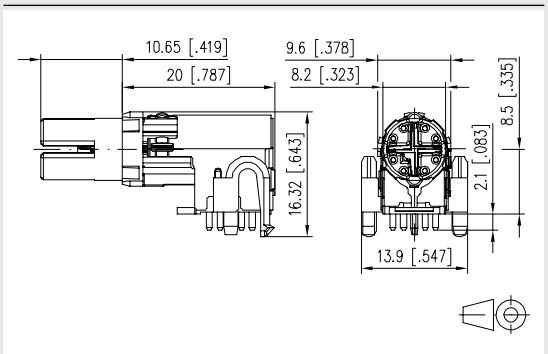

P/N	Color	Feature 1	Feature 2	EAN
MMTA70A315	metallike	X-coded	90°	4250184169598

Accessories

Symbol Definition

Guiding icons

	Spring clamp terminal block		Wire protector
	IDC terminal block		modular
	Screw type terminal block		Pin header for vertical mounting
	Pin header		Shrouded pin header for vertical mounting
	Female connector		Pin header with open ends for vertical mounting
	Ethernet M12		Pin header with closed ends for vertical mounting
	solderable		Pin header for horizontal mounting
	pluggable		Shrouded pin header for horizontal mounting
	Centerline		Pin header with open ends for horizontal mounting
	Wire entry 90°		Pin header with closed ends for horizontal mounting
	Diagonal wire entry		designed for THR
	Wire entry 0°		designed for SMT
	Lift system		Tape & Reel possible

Mounting flange 710084 | right is matching accessory for

	Page
RP025xxIBWC (Type 007)	108
RP029xxIBWC (Type 007)	123
RP025xxHBWC (Type 107)	109
RP025xxMBWC (Type 108)	109

Mounting flange 710085 | left is matching accessory for

	Page
RP025xxIBWC (Type 007)	108
RP029xxIBWC (Type 007)	123
RP025xxHBWC (Type 107)	109
RP025xxMBWC (Type 108)	109

Mounting flange 710084 | right

- The latching flanges are attached to the side of the terminal block and secured to the printed circuit board with a quarter turn of the screw
- Latching flanges for left and right side are necessary for mounting.
- Variants: 710084 right, 710085 left

Color black

Cut-out

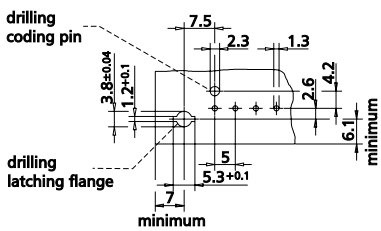

Dimensional drawing

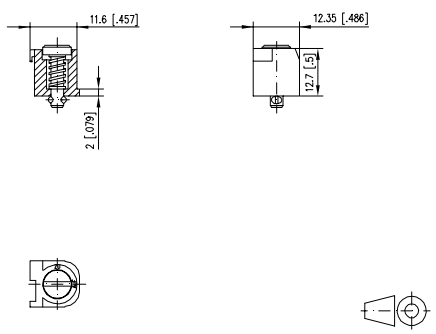

P/N	Color	Feature 1	Feature 2	
710084	black			

Mounting flange 710085 | left

- The latching flanges are attached to the side of the terminal block and secured to the printed circuit board with a quarter turn of the screw
- Latching flanges for left and right side are necessary for mounting.
- Variants: 710084 right, 710085 left

Color black

Cut-out

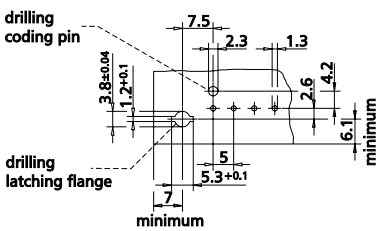

Dimensional drawing

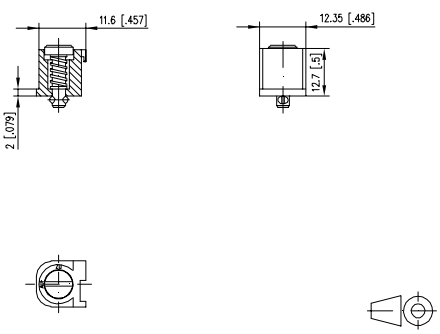

P/N	Color	Feature 1	Feature 2	
710085	black			

Mounting flange 750150 | right is matching accessory for

	Page
RP025xxIBWU (Type 077)	108
RP026xxIBWU (Type 079)	118

Mounting flange 750151 | left is matching accessory for

	Page
RP025xxIBWU (Type 077)	108
RP026xxIBWU (Type 079)	118

Mounting flange 750150 | right

- The mounting flanges are attached to the side of the terminal block and secured to the printed circuit board by the tightening of the screw
- Mounting flanges for left and right side are necessary for mounting.
- Variants: 750150 right, 750151 left

Color black

Cut-out

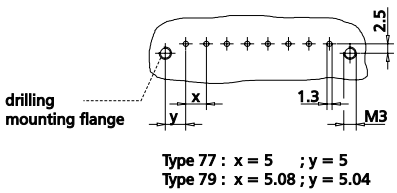

Dimensional drawing

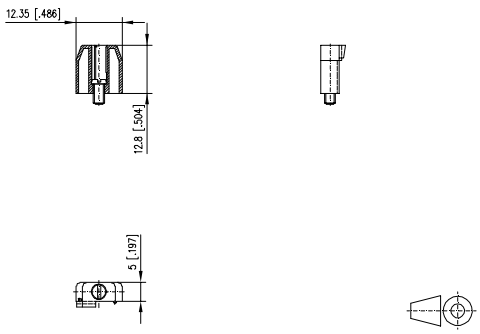

P/N	Color	Feature 1	Feature 2	
750150	black			

Mounting flange 750151 | left

- The mounting flanges are attached to the side of the terminal block and secured to the printed circuit board by the tightening of the screw
- Mounting flanges for left and right side are necessary for mounting.
- Variants: 750150 right, 750151 left

Color black

Cut-out

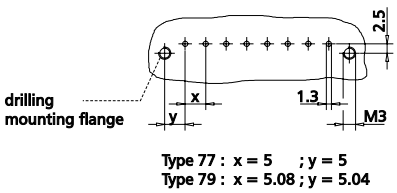

Dimensional drawing

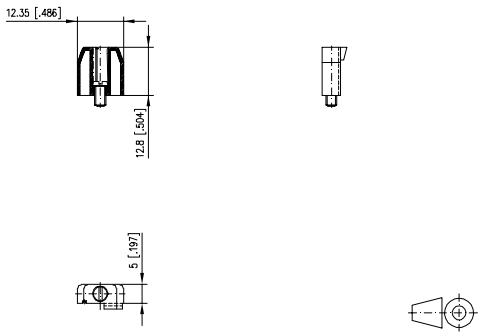

P/N	Color	Feature 1	Feature 2	
750151	black			

Mounting flange 750313 | right is matching accessory for

	Page
RP025xxIBLC (Type 137)	110
RP025xxHBLC (Type 207)	110

Mounting flange 750314 | left is matching accessory for

	Page
RP025xxIBLC (Type 137)	110
RP025xxHBLC (Type 207)	110

Mounting flange 750313 | right

- The mounting flanges are attached to the side of the terminal block and secured to the printed circuit board by the tightening of the screw
- Mounting flanges for left and right side are necessary for mounting.
- Variants: 750313 right, 750314 left

Color black

Cut-out

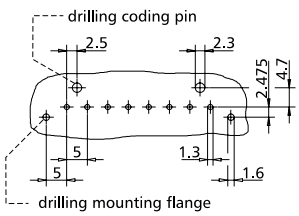

Dimensional drawing

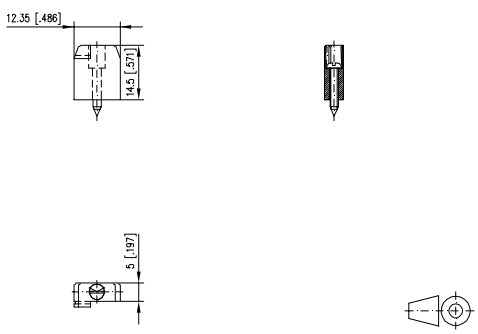

P/N	Color	Feature 1	Feature 2	
750313	black			

Mounting flange 750314 | left

- The mounting flanges are attached to the side of the terminal block and secured to the printed circuit board by the tightening of the screw
- Mounting flanges for left and right side are necessary for mounting.
- Variants: 750313 right, 750314 left

Color black

Cut-out

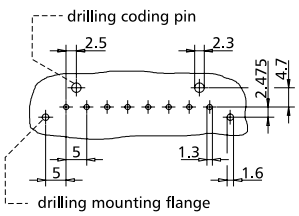

Dimensional drawing

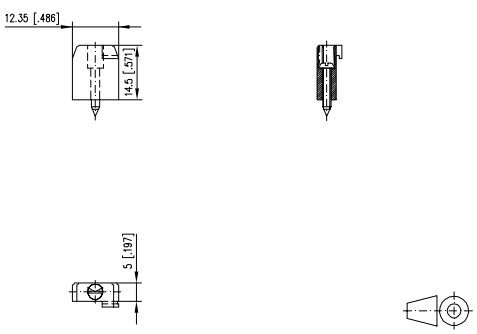

P/N	Color	Feature 1	Feature 2	
750314	black			

Mounting flange 720158 | lock depth 1 mm is matching accessory for

	Page
RP023xxHBNF (Type 165)	100
RP023xxHBWC (Type 166)	100

Mounting flange 720158 | lock depth 1.5 mm is matching accessory for

	Page
RP023xxHBNF (Type 165)	100
RP023xxHBWC (Type 166)	100

Mounting flange 720158 | lock depth 1 mm

- The mounting flange is inserted into the groove in the side of the terminal block and secured to the printed circuit board by being press fit into the hole in the printed circuit board
- Mounting flanges for left and right side are necessary for mounting.
- Variants: 720158-01-2 black for pc board 1.00 mm / 0.039 inches, 720158-02-2 black for pc board 1.50 mm / 0.059 inches

Color black

Cut-out

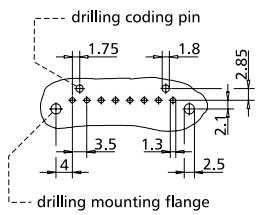

Dimensional drawing

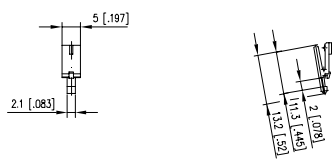

P/N	Color	Feature 1	Feature 2	
720158-01-2	black	Lock depth: 1 mm		

Mounting flange 720158 | lock depth 1.5 mm

- The mounting flange is inserted into the groove in the side of the terminal block and secured to the printed circuit board by being press fit into the hole in the printed circuit board
- Mounting flanges for left and right side are necessary for mounting.
- Variants: 720158-01-2 black for pc board 1.00 mm / 0.039 inches, 720158-02-2 black for pc board 1.50 mm / 0.059 inches

Color black

Cut-out

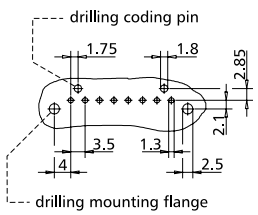

Dimensional drawing

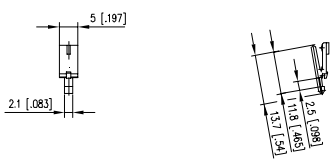

P/N	Color	Feature 1	Feature 2	
720158-02-2	black	Lock depth: 1.5 mm		

Mounting flange 720036 | lock depth 1 mm is matching accessory for

	Page
SP025xxHDNC (ASP025)	52

Mounting flange 720036 | lock depth 1.5 mm is matching accessory for

	Page
SP025xxHDNC(ASP025)	52

Mounting flange 720036 | lock depth 1 mm

- The mounting flange is inserted into the mounting hole in the side of the terminal block and secured to the printed circuit board by being press fit into the hole in the printed circuit board
- Mounting flanges for left and right side are necessary for mounting.
- Variants: 720036-01-4 gray for pc board 1.0 mm / 0.039 inches, 720036-02-2 black for pc board 1.50 mm / 0.059 inches

Color gray

Cut-out

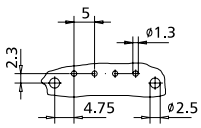

Dimensional drawing

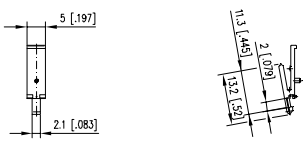

P/N	Color	Feature 1	Feature 2	
720036-01-4	gray	Lock depth: 1 mm		

Mounting flange 720036 | lock depth 1.5 mm

- The mounting flange is inserted into the mounting hole in the side of the terminal block and secured to the printed circuit board by being press fit into the hole in the printed circuit board
- Mounting flanges for left and right side are necessary for mounting.
- Variants: 720036-01-4 gray for pc board 1.0 mm / 0.039 inches, 720036-02-2 black for pc board 1.50 mm / 0.059 inches

Color black

Cut-out

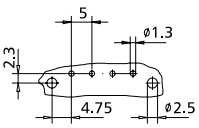

Dimensional drawing

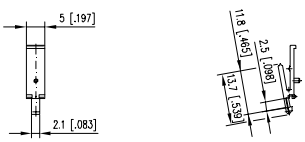

P/N	Color	Feature 1	Feature 2	
720036-02-2	black	Lock depth: 1.5 mm		

Coding pin 710121 | short is matching accessory for

	Page
RP025xxIBWC (Type 007)	108
RP029xxIBWC (Type 007)	123
RP025xxIBWU (Type 077)	108
RP026xxIBWU (Type 079)	118
RP025xxHBWC (Type 107)	109
RP025xxMBWC (Type 108)	109

Coding pin 710122 | long is matching accessory for

	Page
RP025xxIBWC (Type 007)	108
RP029xxIBWC (Type 007)	123
RP025xxIBWU (Type 077)	108
RP026xxIBWU (Type 079)	118
RP025xxHBWC (Type 107)	109
RP025xxMBWC (Type 108)	109

Coding pin 710121 | short

- The coding pin is inserted into the groove in the back of the terminal block
- This method of coding does not result in any circuit loss
- Variants: 710121-2 short, 710122-2 long

Color black

Cut-out

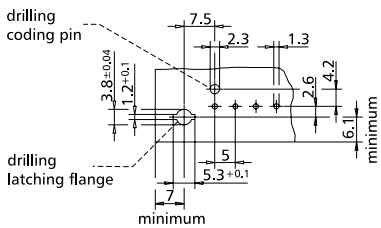

Dimensional drawing

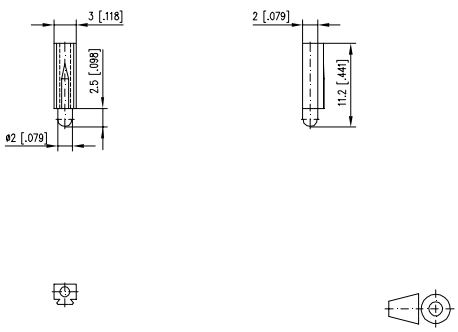

P/N	Color	Feature 1	Feature 2	
710121-2	black			

Coding pin 710122 | long

- The coding pin is inserted into the groove in the back of the terminal block
- This method of coding does not result in any circuit loss
- Variants: 710121-2 short, 710122-2 long

Color black

Cut-out

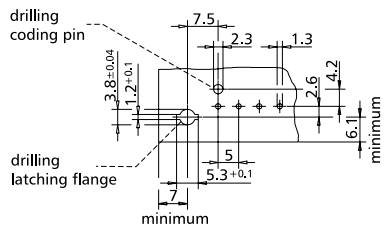

Dimensional drawing

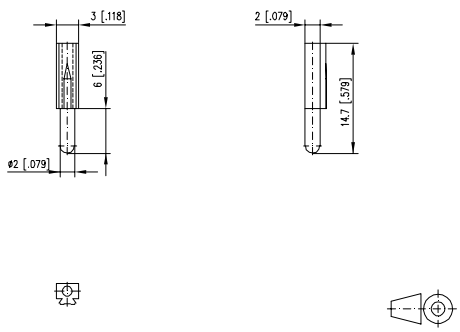

P/N	Color	Feature 1	Feature 2	
710122-2	black			

Coding pin 720159 | short is matching accessory for

	Page
RP023xxHBNF (Type 165)	100
RP023xxHBWC (Type 166)	100
RP025xxHBLC (Type 207)	110

Coding pin 720159 | long is matching accessory for

	Page
RP023xxHBNF (Type 165)	100
RP023xxHBWC (Type 166)	100
RP025xxHBLC (Type 207)	110

Coding pin 720159 | short

- The coding pin is inserted into the groove in the back of the terminal block
- This method of coding does not result in any circuit loss
- Variants: 720159-01-2 short, 720159-02-2 long

Color black

Cut-out

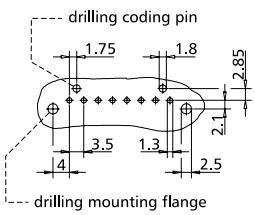

Dimensional drawing

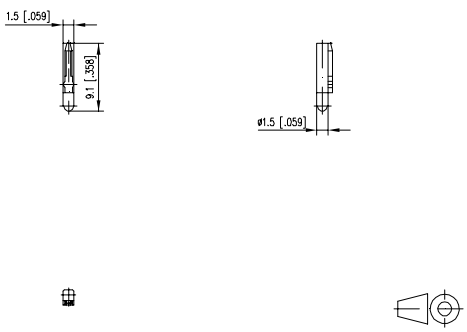

P/N	Color	Feature 1	Feature 2	
720159-01-2	black			

Coding pin 720159 | long

- The coding pin is inserted into the groove in the back of the terminal block
- This method of coding does not result in any circuit loss
- Variants: 720159-01-2 short, 720159-02-2 long

Color black

Cut-out

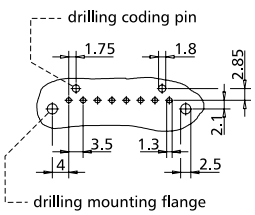

Dimensional drawing

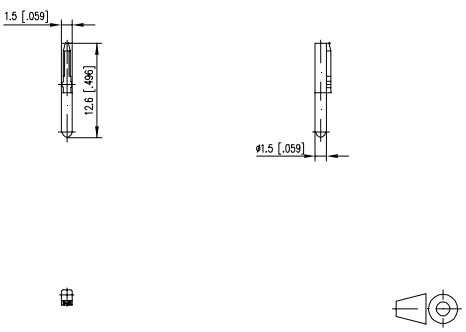

P/N	Color	Feature 1	Feature 2	
720159-02-2	black			

Coding pin 720161 | short is matching accessory for

	Page
RP025xxIBLC (Type 137)	110

Coding pin 720161 | long is matching accessory for

	Page
RP025xxIBLC (Type 137)	110

Coding pin 720161 | short

- The coding pin is inserted into the groove in the back of the terminal block
- This method of coding does not result in any circuit loss
- Variants: 720161-01-2 short, 720161-02-2 long

Color black

Cut-out

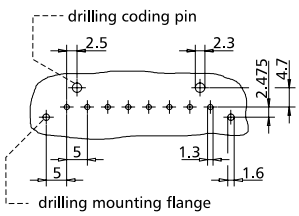

Dimensional drawing

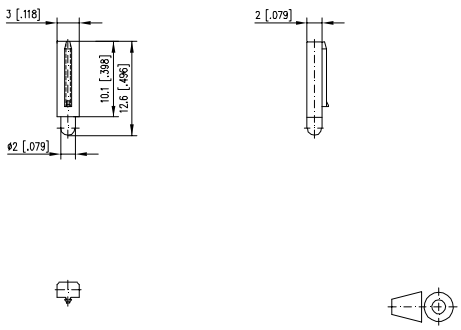

P/N	Color	Feature 1	Feature 2	
720161-01-2	black			

Coding pin 720161 | long

- The coding pin is inserted into the groove in the back of the terminal block
- This method of coding does not result in any circuit loss
- Variants: 720161-01-2 short, 720161-02-2 long

Color black

Cut-out

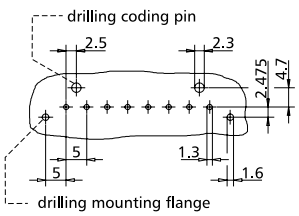

Dimensional drawing

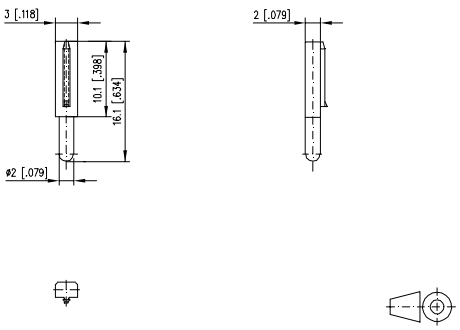

P/N	Color	Feature 1	Feature 2	
720161-02-2	black			

Coding pin 716846 | blue is matching accessory for

	Page
RP025xxIBWC (Type 007)	108
RP029xxIBWC (Type 007)	123
RP025xxIBWU (Type 077)	108
RP026xxIBWU (Type 079)	118
RP025xxHBWC (Type 107)	109
RP025xxMBWC (Type 108)	109
RP025xxIBLC (Type 137)	110

Coding pin 716906 | orange is matching accessory for

	Page
RP015xxWBWC (Type 009)	112
RP015xxWBLC (Type 049)	113
RP019xxWBLC (Type 049)	123

Coding pin 716846 | blue

- The coding pin is inserted into the mating area of the female contact (plug-in). The contact pin should be removed from the respective position of the header.
- This method of coding is associated with a circuit loss
- Group of 10 blue coding pins

Color blue

Dimensional drawing

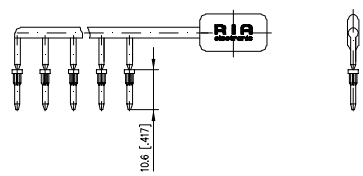

P/N	Color	Feature 1	Feature 2	
716846	blue			

Coding pin 716906 | orange

- The coding pin is inserted into the mating area of the female contact (plug-in). The contact pin should be removed from the respective position of the header.
- This method of coding is associated with a circuit loss
- Group of 10 orange coding pins

Color orange

Dimensional drawing

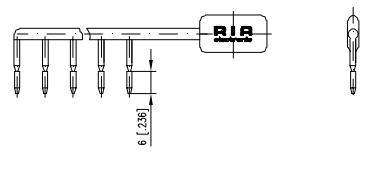

P/N	Color	Feature 1	Feature 2	
716906	orange			

Protection against accidental contact 711401 is matching accessory for

	Page
RT075xxHBLU (Type 092)	81
RT076xxHBLU (Type 093)	88

Protection against accidental contact 711401

- Cover for the lower circuit range of the Type RT075xxHBLU and RT076xxHBLU
- This provides additional protection against manual contact of the upper circuit line
- Variants: 711401-092-02-2 covers 2-pole, 711401-092-03-2 covers 3-pole

Color black

Dimensional drawing

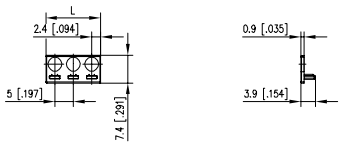

P/N	Color	Feature 1	Feature 2	
711401-092-02-2	black	2-pole		
711401-092-03-2	black	3-pole		

Jumper 711047

- The jumper may be used for all terminal blocks with centerline 5.00 mm / 0.197 inches and 5.08 mm / 0.200 inches

Dimensional drawing

P/N	Color	Feature 1	Feature 2	
711047				

LED light transmitter | Centerline 3.50 mm is matching accessory for

	Page
PT093xxHBBN (Type 342)	149
PT093xxHBBF (Type 394)	149

LED light transmitter | Centerline 3.81 mm is matching accessory for

	Page
PR044xxHBBN (Type 190)	155
PR044xxHBBF (Type 390)	155

LED light transmitter | Centerline 3.50 mm

- LED-light transmitter for headers, pluggable
- centerline 3.50 mm / 0.138 inches, height 8.20 mm / 0.323 inches
- 12 poles, dividable

Color clear

Dimensional drawing

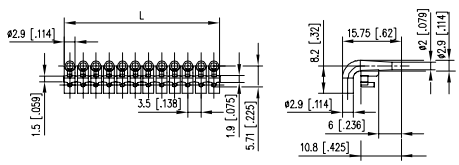

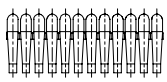

P/N	Color	Feature 1	Feature 2	
700353-01-1216	clear	height 8.2 mm		
700353-02-1216	clear	height 7.4 mm		
700353-03-1216	clear	height 5.7 mm		

LED light transmitter | Centerline 3.81 mm

- LED-light transmitter for headers, pluggable
- centerline 3.81 mm / 0.150 inches, height 8.20 mm / 0.323 inches
- 12 poles, dividable

Color clear

Dimensional drawing

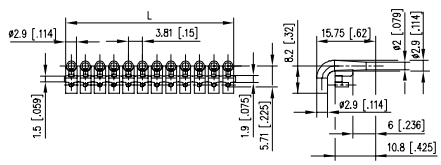

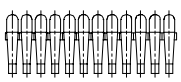

P/N	Color	Feature 1	Feature 2	
700333-01-1216	clear	height 8.2 mm		
700333-02-1216	clear	height 7.4 mm		
700333-03-1216	clear	height 5.7 mm		

Coding pin 720293 | black is matching accessory for

	Page
PR043xxHBBN (Type 188)	146
PR043xxVBBN (Type 189)	151
PR044xxHBBN (Type 190)	155
PR044xxVBBN (Type 191)	157
PT093xxHBBN (Type 342)	149
PT093xxVBBN (Type 343)	154
PT094xxHBBN (Type 382)	156
PT094xxVBBN (Type 383)	158
PT094xxHBBF (Type 392)	156
PT094xxVBBF (Type 393)	158
PR044xxHBBF (Type 390)	155
PR044xxVBBF (Type 391)	157
PR043xxHBBF (Type 388)	147
PR043xxVBBF (Type 389)	151
PT093xxHBBF (Type 394)	149

Coding pin 720243 | orange is matching accessory for

	Page
RP013xxVBWN (Type 169)	105
PT113xxHBBN (Type 182)	150
PT113xxVBBN (Type 183)	154

Coding pin 720293 | black

- The coding pin is inserted into the slots provided in the header. The terminal blocks mating these headers show a coding ridge which has to be removed.
- This method of coding does not result in any circuit loss
- Group of 6 black coding pins

Color black

Dimensional drawing

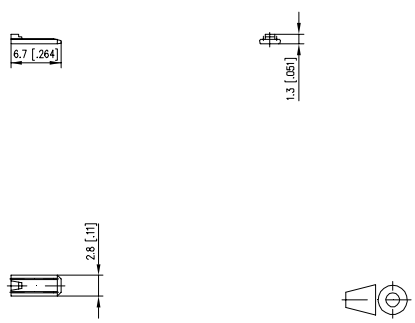

P/N	Color	Feature 1	Feature 2	
720293-01-2	black			

Coding pin 720243 | orange

- The coding pins are inserted into the slots provided in the terminal block and respective header
- This method of coding does not result in any circuit loss. Please refer to the drawing below for further details.
- Variants: 720243-01-3 with 6 coding pins orange left; 70243-02-3 with 6 coding pins orange right, 720243-01-4 6 with 6 coding pins gray left, 720243-02-4 with 6 coding pins gray right

Color orange

Picture

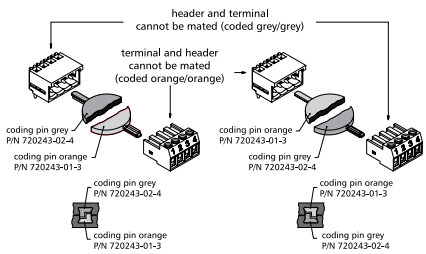

Dimensional drawing

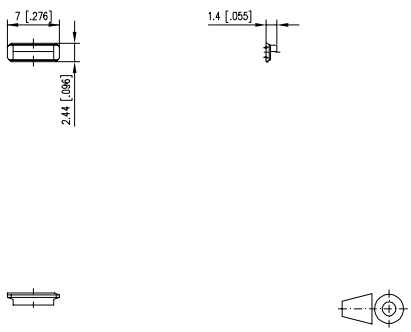

P/N	Color	Feature 1	Feature 2	
720243-01-3	orange			
720243-02-3	orange			

Coding pin 700024 | white | Pin header is matching accessory for

Coding pin 720243 | gray

- The coding pins are inserted into the slots provided in the terminal block and respective header
- This method of coding does not result in any circuit loss. Please refer to the drawing below for further details.
- Variants: 720243-01-3 with 6 coding pins orange left; 70243-02-3 with 6 coding pins orange right, 720243-01-4 6 with 6 coding pins gray left, 720243-02-4 with 6 coding pins gray right

Color gray

Picture

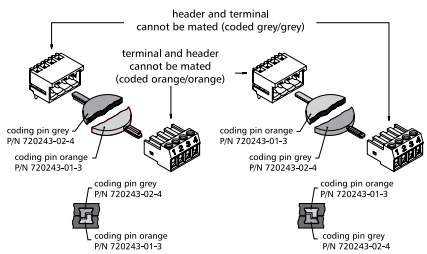

Dimensional drawing

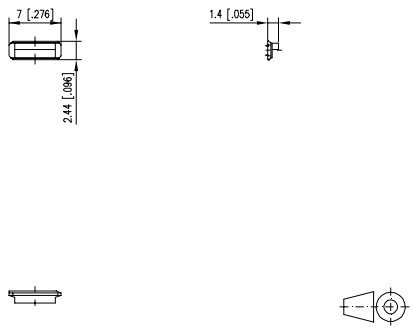

P/N	Color	Feature 1	Feature 2	
720243-01-4	gray			
720243-02-4	gray			

Coding pin 700024 | white | Pin header

- The coding pins are inserted into the slots provided in the terminal block and respective header. The coding pin with the bridge will be inserted into the header.
- This method of coding does not result in any circuit loss. Please refer to the drawing below for further details.
- Group of 6 coding pins

Color white

Picture

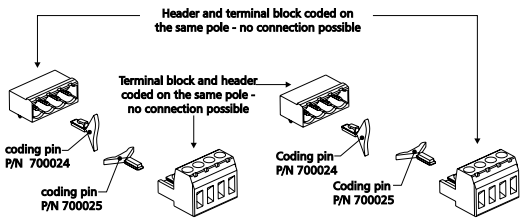

Dimensional drawing

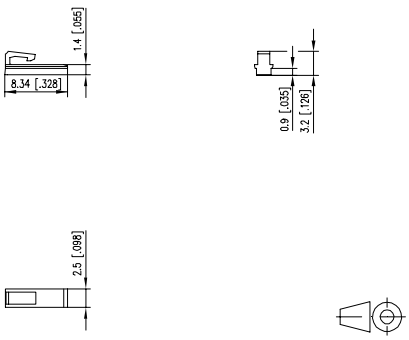

P/N	Color	Feature 1	Feature 2	
700024-01-9	white			

Coding pin 700025 | white | Terminal block is matching accessory for

Coding pin 700025 | white | Terminal block

- The coding pins are inserted into the slots provided in the terminal block and respective header. The coding pin with the bridge will be inserted into the header.
- This method of coding does not result in any circuit loss. Please refer to the drawing below for further details.
- Group of 6 coding pins

Color	white

Picture

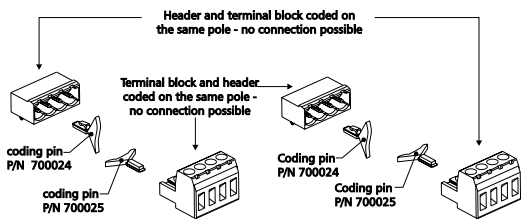

Dimensional drawing

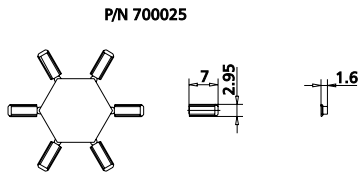

P/N	Color	Feature 1	Feature 2	
700025-01-9	white			

Screwdriver 791989 | 2.5 mm

- Screwdriver with blade width 2.50 mm / 0.098 inches

P/N	Color	Feature 1	Feature 2	
791989				

Screwdriver 791990 | 3.0 mm

- Screwdriver with blade width 3.00 mm / 0.118 inches

P/N	Color	Feature 1	Feature 2	
791990				

Cross range application solutions

Next to the products from our U|Contact range that offers PCB connection systems, we also provide cross-range application solutions from the P|Cabling range enabling a structured and smooth data flow from the PCB to the network and the infrastructure.

RJ45 patch cable

Cat.6$_A$ 10G AWG 26 gray
P/N: 130845xx33-E

Cat.6$_A$ 10G AWG 26 yellow
P/N: 130845xx77-E

Cat.6$_A$ 10G AWG 26 green
P/N: 130845xx55-E

Cat.6$_A$ 10G AWG 26 blue
P/N: 130845xx44-E

Cat.6$_A$ 10G AWG 26 red
P/N: 130845xx66-E

Cat.6$_A$ 10G AWG 26 white
P/N: 130845xx88-E

Inserts for IP67 flanges

E-DAT Industry RJ45
field jack insert
P/N: 1401100810MI

E-DAT Industry RJ45
coupler insert
P/N: 1401200810MI

OpDAT Industry RJ45
SCRJ/2SC insert
P/N: 1402100820MI

OpDAT Industry RJ45
SCRJ/2SC insert
P/N: 1402300820MI

IP67 flanges

Industry IP67 V1 bulkhead
P/N: 1401013302KE

Industry IP67 V1
metal bulkhead
P/N: 1401013300ME

Industry IP67 V4 bulkhead
P/N: 1401043302KE

Industry IP67 V5
metal bulkhead
P/N: 1401063300ME

Industry IP67 V14 bulkhead
standard fixation
P/N: 14010833C0MN

Industry IP67 V14 bulkhead
central fixation
P/N: 14010833C0MC

Plugs

E-DAT Industry IP20
RJ45 field plug black
P/N: 1401405012-I

E-DAT Industry IP20
RJ45 plug
P/N: 1401505012-E

OpDAT Industry IP20
SC plug
P/N: 1402F05020-I

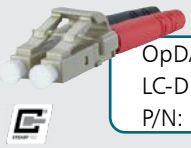

OpDAT Industry IP20
LC-D plug
P/N: 1402805020-I

Ethernet M12 cable plug,
suitable for field assembly,
8-pole X-coded
P/N: MNF881A315

Ethernet M12 lines

Connection line M12
4-pole D-coded
P/N: 142M1D10xxx

Cable M12
4-pole D-coded
P/N: 142M1D11xxx

Cable M12
8-pole X-coded
P/N: 142M2X10xxx

Connection line M12
8-pole X-coded
P/N: 142M2X11xxx

Connection line RJ45/M12,
8-pole X-coded
1, 2, 5, 10 m
P/N: 142M2X15xxx

Type- and Crosslist

Spring clamp terminal blocks

Old product name	New product name	P/N	Page
AST061	ST061xxHDNN	AST061	23
AST021	ST021xxHDNN	AST021	23
AST041	ST041xxDDNN	AST041	24
AST072	ST072xxHGNN	AST072	25
AST082	ST072xxVGNN	AST082	25
AST223	SR213xxHBNC	AST223	26
	SR213xxHBPC	SR213xxHBPC	26
AST233	SR213xxDBNC	AST233	27
	SR213xxDBPC	SR213xxDBPC	27
AST213	SR213xxVBNC	AST213	28
	SR213xxVBPC	SR213xxVBPC	28
AST024	ST024xxHDNC	AST024	29
AST225	SR215xxHBNC	AST225	30
	SR215xxHBPC	SR215xxHBPC	30
AST065	ST065xxHDNN	AST065	31
AST025	ST025xxHDNC	AST025	31
AST055	ST055xxHBNC	AST055	32
AST095	ST095xxHDNN	AST095	32
AST235	SR215xxDBNC	AST235	33
AST045	ST045xxDDNC	AST045	33
AST135	ST135xxDDNC	AST135	34
AST175	ST175xxLDNN	AST175	34
AST185	ST185xxLDNN	AST185	35
AST215	SR215xxVBNC	AST215	35
	SR215xxVBPC	SR215xxVBPC	36
AST105	ST105xxVDNN	AST105	36
AST125	ST125xxVDNN	AST125	37
AST145	ST145xxVDNN	AST145	37
AST176	ST176xxLDNN	AST176	38
AST186	ST186xxLDNN	AST186	38
AST067	ST067xxHDNN	AST067	39
AST027	ST027xxHDNC	AST027	39
AST057	ST057xxHBNC	AST057	40
AST047	ST047xxDDNC	AST047	40
AST137	ST137xxDDNC	AST137	41
AST177	ST177xxLDNN	AST177	41
AST187	ST187xxLDNN	AST187	42
AST098	ST098xxHDNN	AST098	43
AST178	ST178xxLDNN	AST178	43
AST188	ST188xxLDNN	AST188	44
AST108	ST108xxVDNN	AST108	44
AST128	ST128xxVDNN	AST128	45
AST059	ST059xxHBNC	AST059	46
AST139	ST139xxDDNC	AST139	46
ASP051	SP051xxVGNN	ASP051	47
ASP043	SP043xxVBNN	ASP043	48
	SW063xxVBNN	SW063xxVBNN	48
ASP063	SP063xxVGNN	ASP063	49
ASP083	SP063xxVGNF	ASP083	49
ASP044	SP044xxVBNN	ASP044	50
ASP064	SP064xxVGNN	ASP064	50
ASP084	SP064xxVGNF	ASP084	51
ASP025	SP025xxHDNC	ASP025	52
ASP145	SP145xxHBNC	ASP145	52
ASP155	SP155xxHBNC	ASP155	53
ASP045	SP045xxVBNC	ASP045	53
	SP065xxVBNC	SP065xxVBNC	54
	SP065xxVBPC	SP065xxVBPC	54
	SP065xxVBNF	SP065xxVBNF	55
	SP065xxVBPF	SP065xxVBPF	55
	SP995xxVBNC	SP995xxVBNC	56
ASP046	SP046xxVBNC	ASP046	57
	SP066xxVBNC	SP066xxVBNC	57
	SP066xxVBPC	SP066xxVBPC	58
	SP066xxVBNF	SP066xxVBNF	58
	SP066xxVBPF	SP066xxVBPF	59

Spring clamp terminal blocks

Old product name	New product name	P/N	Page
ASP049	SP049xxVBNC	ASP049	60
ASP129	SP129xxVBNF	ASP129	60
ASP04A	SP04AxxVBNC	ASP04A	61
	SC305xxHBNN	SC305xxHBNN	62
	SL305xxHBNN	SL305xxHBNN	62

Screw type terminal blocks

Old product name	New product name	P/N	Page
Type 060	RT063xxHBNC	310601	69
Type 059	RT063xxHBWC	310591	69
Type 459	RT063xxOBWC	314591	70
Type 461	RT063xxPBWC	314611	70
Type 359	RT033xxHBLU	313591	71
Type 105	RT083xxDBWC	311051	71
Type 305	RT043xxLBLC	313051	72
Type 061	RT063xxVBWC	310611	72
Type 361	RT033xxVBLU	313611	73
Type 086	RT034xxHBLC	310861	74
Type 001	RT015xxHDWC	310011	75
Type 055	RT015xxHDWU	310551	75
Type 271	RT135xxHBWC	312711	76
Type 003	RT045xxHBWC	310031	76
Type 069	RT045xxMBWC	310691	77
Type 011	RT055xxHBLC	310111	77
Type 071	RT025xxHBLC	310711	78
Type 072	RT025xxHBLU	310721	78
Type 204	RT145xxHBVC	312041	79
Type 269	RT145xxMBLC	312691	79
Type 170	RT165xxHBNC	311701	80
Type 094	RT035xxHBLU	310941	80
Type 092	RT075xxHBLU	310921	81
Type 096	RT205xxHBLU	310961	81
Type 065	RT025xxOGLU	310651	82
Type 385	RT025xxHDLL	313851	82
Type 386	RT025xxHDLR	313861	83
Type 005	RT085xxDBWC	310051	83
Type 205	RT045xxUBLC	312051	84
Type 063	RT015xxVDWC	310631	84
Type 147	RT095xxVBWC	311471	85
Type 101	RT016xxHBWC	311011	86
Type 015	RT056xxHBLU	310151	86
Type 095	RT036xxHBLU	310951	87
Type 083	RT046xxHBWU	310831	87
Type 093	RT076xxHBLU	310931	88
Type 097	RT206xxHBLU	310971	88
Type 073	RT026xxHBLU	310731	89
Type 163	RT016xxVBWC	311631	89
Type 701	RT11LxxHGLU	317011	90
Type 171	RT137xxHBWC	311711	91
Type 175	RT027xxHBLC	311751	91
Type 703	RT10NxxHGLU	317031	92
Type 001	RT019xxHDWC	310012	93
Type 067	RT019xxHDWC	310671	93
Type 271	RT139xxHBWC	312712	94
Type 003	RT049xxHBWC	310032	94
Type 069	RT049xxMBWC	310692	95
Type 011	RT059xxHBLC	310112	95
Type 071	RT029xxHBLC	310712	96
Type 269	RT149xxMBLC	312692	96
Type 205	RT049xxUBLC	312052	97
Type 063	RT019xxVDWC	310632	97
Type 147	RT099xxVBWC	311472	98
Type 163	RT01AxxVBWC	311632	99
Type 166	RP023xxHBWC	311661	100
Type 165	RP023xxHBNF	311651	100
Type 614	RP043xxHBLC	316141	101

Screw type terminal blocks

Old product name	New product name	P/N	Page
Type 613	RP043xxHBLD	316131	101
Type 634	RP043xxHBLF	316341	102
Type 633	RP043xxHBLS	316331	102
Type 514	RW043xxHBLC	315141	103
Type 513	RW043xxHBLD	315131	103
Type 534	RW043xxHBLF	315341	104
Type 533	RW043xxHBLS	315331	104
Type 169	RP013xxVBWN	311691	105
Type 339	RP033xxVBLC	313391	105
Type 114	RP034xxHBLN	311141	106
Type 113	RP034xxHBLO	311131	106
Type 369	RP034xxVBLN	313691	107
Type 379	RP034xxVBLF	313791	107
Type 007	RP025xxIBWC	310071	108
Type 077	RP025xxIBWU	310771	108
Type 107	RP025xxHBWC	311071	109
Type 108	RP025xxMBWC	311081	109
Type 207	RP025xxHBLC	312071	110
Type 137	RP025xxIBLC	311371	110
Type 157 with snap-in technique	RP095xxRBWC	311571	111
Type 157 without ridge	RP095xxBBWC	311571xx-002730	111
Type 157 with ridge	RP095xxHBWC	311571xx-002740	112
Type 009	RP015xxWBWC	310091	112
Type 049	RP015xxWBLC	310491	113
Type 349	RP015xxVBLC	313491	113
Type 350	RP015xxSBLC	313501	114
Type 351	RP015xxVBLF	313511	114
Type 348	RP085xxVBLC	313481	115
Type 013	RP035xxIBLN	310131	115
Type 313	RP035xxHBLC	313131	116
Type 314	RP035xxHBLD	313141	116
	RP995xxVDNN	RP995xxVDNN	117
Type 079	RP026xxIBWU	310791	118
Type 249	RP016xxVBLC	312491	118
Type 250	RP016xxSBLC	312501	119
Type 251	RP016xxVBLF	312511	119
Type 213	RP036xxHBLC	312131	120
Type 214	RP036xxHBLD	312141	120
Type 217	RP036xxHBLF	312171	121
Type 218	RP036xxHBLS	312181	121
Type 262	RP018xxVBLC	312621	122
Type 007	RP029xxIBWC	310072	123
Type 049	RP019xxWBLC	310492	123
Type 313	RP039xxHBLC	313132	124
Type 349	RP019xxVBLC	313492	124
Type 351	RP019xxVBLF	313512	125
Type 249	RP01AxxVBLC	312492	126
Type 251	RP01AxxVBLF	312512	126
Type 213	RP03AxxHBLC	312132	127
Type 214	RP03AxxHBLD	312142	127
Type 217	RP03AxxHBLF	312172	128
Type 218	RP03AxxHBLS	312182	128

IDC type terminal blocks

Old product name	New product name	P/N	Page
AIT023	IT023xxHDNU	AIT023	137

Pin headers

Old product name	New product name	P/N	Page
Type 374	PT091xxHGBN	313741	145
Type 373	PT091xxVGBN	313731	145
Type 024	PR013xxVBHC	310241	146
Type 188	PR043xxHBBN	311881	146
Type 388	PR043xxHBBF	313881	147
Type 527	PW063xxHBEC	315271	147

Pin headers

Old product name	New product name	P/N	Page
Type 523	PW063xxHBBN	315231	148
Type 525	PW063xxHBBF	315251	148
Type 342	PT093xxHBBN	313421	149
Type 394	PT093xxHBBF	313941	149
Type 182	PT113xxHBBN	311821	150
Type 224	PR033xxVBHC	312241	150
Type 189	PR043xxVBBN	311891	151
Type 389	PR043xxVBBF	313891	151
Type 528	PW063xxVBEC	315281	152
Type 524	PW063xxVBBN	315241	152
Type 526	PW063xxVBBF	315261	153
Type 424	PM013xxVBHC	314241	153
Type 343	PT093xxVBBN	313431	154
Type 183	PT113xxVBBN	311831	154
Type 190	PR044xxHBBN	311901	155
Type 390	PR044xxHBBF	313901	155
Type 382	PT094xxHBBN	313821	156
Type 392	PT094xxHBBF	313921	156
Type 191	PR044xxVBBN	311911	157
Type 391	PR044xxVBBF	313911	157
Type 383	PT094xxVBBN	313831	158
Type 393	PT094xxVBBF	313931	158
Type 476	PR065xxHBEC	314761	159
Type 176	PR065xxHBBN	311761	159
Type 396	PR065xxHBBF	313961	160
Type 337	PR075xxHBEL	313371	160
Type 338	PR075xxHBER	313381	161
Type 029	PT045xxHBEC	310291	161
Type 030	PT045xxHBBN	310301	162
Type 031	PT045xxHBVC	310311	162
Type 039	PT055xxHBHC	310391	163
Type 280	PT105xxHGDN	312801	163
Type 329	PT115xxHBEC	313291	164
Type 330	PT115xxHBBN	313301	164
Type 336	PT115xxHBBF	313361	165
Type 276	PT165xxHGDN	312761	165
Type 017	PR015xxVBHC	310171	166
Type 027	PR015xxVBVC	310271	166
Type 317	PM015xxVBHC	313171	167
Type 318	PM025xxVBHC	313181	167
Type 046	PR035xxVBHC	310461	168
Type 048	PR055xxVBHC	310481	168
Type 477	PR065xxVBEC	314771	169
Type 177	PR065xxVBBN	311771	169
Type 397	PR065xxVBBF	313971	170
Type 417	PM035xxVBHC	314171	170
Type 019	PT045xxVBEC	310191	171
Type 020	PT045xxVBBN	310201	171
Type 041	PT065xxVBEN	310411	172
Type 042	PT065xxVBVN	310421	172
Type 278	PT105xxVGDN	312781	173
Type 319	PT115xxVBEC	313191	173
Type 320	PT115xxVBBN	313201	174
Type 335	PT115xxVBBF	313351	174
Type 274	PT165xxVGDN	312741	175
Type 270	PT175xxVGDN	312701	175
Type 478	PR066xxHBEC	314781	176
Type 178	PR066xxHBBN	311781	176
Type 292	PT106xxHGDN	312921	177
Type 229	PT116xxHBEC	312291	177
Type 230	PT116xxHBBN	312301	178
Type 236	PT116xxHBBF	312361	178
Type 288	PT166xxHGDN	312881	179
Type 018	PR016xxVBHC	310181	179
Type 028	PR016xxVBVC	310281	180
	PM016xxVBHC	PM016xxVBHC	180

Pin headers

Old product name	New product name	P/N	Page
Type 398	PR066xxHBBF	313981	181
Type 399	PR066xxVBBF	313991	181
Type 479	PR066xxVBEC	314791	182
Type 179	PR066xxVBBN	311791	182
Type 290	PT106xxVGDN	312901	183
Type 219	PT116xxVBEC	312191	183
Type 220	PT116xxVBBN	312201	184
Type 235	PT116xxVBBF	312351	184
Type 286	PT166xxVGDN	312861	185
Type 265	PT118xxHBEC	312651	186
Type 266	PT118xxHBBC	312661	186
Type 263	PT118xxVBEC	312631	187
Type 264	PT118xxVBBC	312641	187
Type 031	PT049xxHBVC	310312	188
Type 030	PT049xxHBBN	310302	188
Type 336	PT119xxHBBF	313362	189
Type 042	PT069xxVBVN	310422	189
Type 020	PT049xxVBBN	310202	190
Type 320	PT119xxVBBN	313202	190
Type 335	PT119xxVBBF	313352	191
Type 229	PT11AxxHBEC	312292	192
Type 230	PT11AxxHBBN	312302	192
Type 236	PT11AxxHBBF	312362	193
Type 219	PT11AxxVBEC	312192	193
Type 220	PT11AxxVBBN	312202	194
Type 235	PT11AxxVBBF	312352	194

Female connectors

Old product name	New product name	P/N	Page
	FW143xxVBFC	FW143xxVBFC	197
Type 089	FT143xxVBFC	310891	197
Type 026	FT085xxVBFC	310261	198

Pin headers

Old product name	New product name	P/N	Page
	PR20BxxHBNN	PR20BxxHBNN	203
	PR20BxxHBDN	PR20BxxHBDN	203
	PR20BxxVBNN	PR20BxxVBNN	204
	PR20BxxVBDN	PR20BxxVBDN	204
	PM20BxxVBNN	PM20BxxVBNN	205
	PM20BxxVBDN	PM20BxxVBDN	205
	PR20CxxHBNN	PR20CxxHBNN	206
	PR20CxxHBDN	PR20CxxHBDN	206
	PM20CxxHBNN	PM20CxxHBNN	207
	PM20CxxHBDN	PM20CxxHBDN	207
	PR20CxxVBNN	PR20CxxVBNN	208
	PR20CxxVBDN	PR20CxxVBDN	208
	PM20CxxVBNN	PM20CxxVBNN	209
	PM20CxxVBDN	PM20CxxVBDN	209
	PR202xxHBNN	PR202xxHBNN	210
	PR202xxHBDN	PR202xxHBDN	210
	PM202xxHBNN	PM202xxHBNN	211
	PM202xxHBDN	PM202xxHBDN	211
	PR202xxVBNN	PR202xxVBNN	212
	PR202xxVBDN	PR202xxVBDN	212
	PM202xxVBNN	PM202xxVBNN	213
	PM202xxVBDN	PM202xxVBDN	213

Female connectors

Old product name	New product name	P/N	Page
	FR20BxxVBNN	FR20BxxVBNN	215
	FR20BxxVBDN	FR20BxxVBDN	215
	FM20BxxVBDN	FM20BxxVBDN	216
	FR20CxxHBNN	FR20CxxHBNN	217
	FR20CxxHBDN	FR20CxxHBDN	217
	FR20CxxVBNN	FR20CxxVBNN	218

Female connectors

Old product name	New product name	P/N	Page
	FR20CxxVBDN	FR20CxxVBDN	218
	FM20CxxVBNN	FM20CxxVBNN	219
	FM20CxxVBDN	FM20CxxVBDN	219
	FR202xxHBNN	FR202xxHBNN	220
	FR202xxHBDN	FR202xxHBDN	220
	FR202xxVBNN0002	FR202xxVBNN0002	221
	FR202xxVBDN0002	FR202xxVBDN0002	221
	FR202xxVBNN	FR202xxVBNN	222
	FR202xxVBDN	FR202xxVBDN	222
	FR202xxVBNN0001	FR202xxVBNN0001	223
	FR202xxVBDN0001	FR202xxVBDN0001	223
	FM202xxVBNN	FM202xxVBNN	224
	FM202xxVBDN	FM202xxVBDN	224

Pin headers / Spring clamp terminal blocks		PT091xxHGBN	PT091xxVGBN	PR043xxHBBN	PT093xxHBBN	PR043xxVBBN	PT093xxVBBN	PW063xxHBEC	PW063xxHBBN	PW063xxVBEC	PW063xxVBBN	PR043xxHBBF	PT093xxHBBF	PR043xxVBBF	PR044xxHBBN	PR044xxVBBN	PT094xxHBBN	PT094xxVBBN	PR044xxHBBF	PT094xxHBBF	PR044xxVBBF	PT094xxVBBF	PT055xxHBHC	PR015xxVBHC	PM035xxVBHC	PT065xxVBEN
	Page	145	145	146	149	151	154	147	148	152	152	147	149	151	155	157	156	158	155	156	157	158	163	166	170	172
SP051xxVGNN	47	●	●																							
SP043xxVBNN	48			●	●	●	●																			
SW063xxVBNN	48							●	●	●	●															
SP063xxVGNN	49			●	●	●	●																			
SP063xxVGNF	49											●	●	●												
SP044xxVBNN	50														●	●										
SP064xxVGNN	50														●	●	●	●								
SP064xxVGNF	51																		●	●	●	●				
SP025xxHDNC	52																						●	●	●	●
SP145xxHBNC	52																									
SP155xxHBNC	53																									
SP045xxVBNC	53																									
SP065xxVBNC	54																									
SP065xxVBPC	54																									
SP065xxVBNF	55																									
SP065xxVBPF	55																									
SP995xxVBNC	56																									
SP046xxVBNC	57																									
SP066xxVBNC	57																									
SP066xxVBPC	58																									
SP066xxVBNF	58																									
SP066xxVBPF	59																									
SP049xxVBNC	60																									
SP129xxVBNF	60																									
SP04AxxVBNC	61																									

Pin headers / Spring clamp terminal blocks		PR035xxVBHC	PR065xxHBEC	PR065xxHBBN	PR075xxHBEL	PR075xxHBER	PT115xxHBEC	PT115xxHBBN	PT165xxHGDN	PR065xxVBEC	PR065xxVBBN	PT115xxVBEC	PT115xxVBBN	PT165xxVGDN	PT175xxVGDN	PT105xxHGDN	PT105xxVGDN	PR065xxHBBF	PT115xxHBBF	PR065xxVBBF	PT115xxVBBF	PT045xxHBBN	PT045xxHBVC	PT045xxVBBN	PR066xxHBEC	PR066xxHBBN
	Page	168	159	159	160	161	164	164	165	169	169	173	174	175	175	163	173	160	165	170	174	162	162	171	176	176
SP051xxVGNN	47																									
SP043xxVBNN	48																									
SW063xxVBNN	48																									
SP063xxVGNN	49																									
SP063xxVGNF	49																									
SP044xxVBNN	50																									
SP064xxVGNN	50																									
SP064xxVGNF	51																									
SP025xxHDNC	52																									
SP145xxHBNC	52	●																								
SP155xxHBNC	53	●																								
SP045xxVBNC	53		●	●	●	●	●	●	●	●	●	●	●	●	●											
SP065xxVBNC	54		●	●	●	●	●	●	●	●	●		●	●	●	●	●									
SP065xxVBPC	54		●	●	●	●	●	●	●	●	●		●	●	●	●	●									
SP065xxVBNF	55																	●	●	●	●					
SP065xxVBPF	55																	●	●	●	●					
SP995xxVBNC	56		●	●	●	●	●	●	●	●	●	●	●	●	●	●	●					●	●	●		
SP046xxVBNC	57																								●	●
SP066xxVBNC	57																								●	
SP066xxVBPC	58																								●	
SP066xxVBNF	58																									
SP066xxVBPF	59																									
SP049xxVBNC	60																									
SP129xxVBNF	60																									
SP04AxxVBNC	61																									

Pin headers / Spring clamp terminal blocks	Page	PT106xxHGDN	PT116xxHBEC	PT116xxHBBN	PT166xxHGDN	PR066xxVBEC	PT106xxVGDN	PT116xxVBEC	PT116xxVBBN	PT166xxVGDN	PT116xxHBBF	PR066xxHBBF	PR066xxVBBF	PT116xxVBBF	PT119xxVBBN	PT119xxHBBF	PT119xxVBBF	PT11AxxHBEC	PT11AxxHBBN	PT11AxxVBEC	PT11AxxVBBN
	Page	177	177	178	179	182	183	183	184	185	178	181	181	184	190	189	191	192	192	193	194
SP051xxVGNN	47																				
SP043xxVBNN	48																				
SW063xxVBNN	48																				
SP063xxVGNN	49																				
SP063xxVGNF	49																				
SP044xxVBNN	50																				
SP064xxVGNN	50																				
SP064xxVGNF	51																				
SP025xxHDNC	52																				
SP145xxHBNC	52																				
SP155xxHBNC	53																				
SP045xxVBNC	53																				
SP065xxVBNC	54																				
SP065xxVBPC	54																				
SP065xxVBNF	55																				
SP065xxVBPF	55																				
SP995xxVBNC	56																				
SP046xxVBNC	57	●	●	●	●	●	●	●	●	●											
SP066xxVBNC	57					●		●	●												
SP066xxVBPC	58					●		●	●												
SP066xxVBNF	58										●	●	●	●							
SP066xxVBPF	59										●	●		●							
SP049xxVBNC	60														●						
SP129xxVBNF	60															●	●				
SP04AxxVBNC	61																	●	●	●	●

Pin headers / Screw type terminal blocks	Page	PR033xxVBHC	PM013xxVBHC	PR013xxVBHC	PR043xxHBBN	PT093xxHBBN	PR043xxVBBN	PT093xxVBBN	PR043xxHBBF	PT093xxHBBF	PR043xxVBBF	PW063xxHBBN	PW063xxVBBN	PW063xxHBBF	PW063xxVBBF	PT113xxHBBN	PT113xxVBBN	PR044xxHBBN	PT094xxHBBN	PR044xxVBBN	PT094xxVBBN	PR044xxHBBF	PT094xxHBBF	PR044xxVBBF	PT094xxVBBF	PT055xxHBHC
	Page	150	153	146	146	149	151	154	147	149	151	148	152	148	153	150	154	155	156	157	158	155	156	157	158	163
RP023xxHBWC	100	●	●																							
RP023xxHBNF	100			●																						
RP043xxHBLC	101				●	●	●	●																		
RP043xxHBLD	101				●	●	●	●																		
RP043xxHBLF	102								●	●	●															
RP043xxHBLS	102								●	●	●															
RW043xxHBLC	103											●	●													
RW043xxHBLD	103											●	●													
RW043xxHBLF	104													●	●											
RW043xxHBLS	104													●	●											
RP013xxVBWN	105															●	●									
RP033xxVBLC	105				●	●	●	●																		
RP034xxHBLN	106																	●	●	●	●					
RP034xxHBLO	106																	●	●	●	●					
RP034xxVBLN	107																	●	●	●	●					
RP034xxVBLF	107																					●	●	●	●	
RP025xxIBWC	108																									●
RP025xxIBWU	108																									●
RP025xxHBWC	109																									●
RP025xxHBLC	110																									
RP025xxIBLC	110																									
RP095xxRBWC	111																									
RP095xxBBWC	111																									
RP095xxHBWC	112																									
RP015xxWBWC	112																									
RP015xxWBLC	113																									
RP015xxVBLC	113																									
RP015xxSBLC	114																									
RP015xxVBLF	114																									
RP085xxVBLC	115																									
RP035xxIBLN	115																									
RP035xxHBLC	116																									
RP035xxHBLD	116																									
RP026xxIBWU	118																									
RP016xxVBLC	118																									
RP016xxSBLC	119																									
RP016xxVBLF	119																									
RP036xxHBLC	120																									
RP036xxHBLD	120																									
RP036xxHBLF	121																									
RP036xxHBLS	121																									
RP018xxVBLC	122																									
RP029xxIBWC	123																									
RP019xxWBLC	123																									
RP039xxHBLC	124																									
RP019xxVBLC	124																									
RP019xxVBLF	125																									
RP01AxxVBLC	126																									
RP01AxxVBLF	126																									
RP03AxxHBLC	127																									
RP03AxxHBLD	127																									
RP03AxxHBLF	128																									
RP03AxxHBLS	128																									

Pin headers / Screw type terminal blocks	Page	PR015xxVBHC	PR015xxVBVC	PM035xxVBHC	PT065xxVBEN	PT065xxVBVN	PR055xxVBHC	PM025xxVBHC	PR035xxVBHC	PT045xxHBEC	PT045xxHBBN	PT045xxHBVC	PT045xxVBEC	PT045xxVBBN	PR065xxHBEC	PR065xxHBBN	PR075xxHBEL	PR075xxHBER	PT105xxHGDN	PT115xxHBEC	PT115xxHBBN	PT165xxHGDN	PR065xxVBEC	PR065xxVBBN	PT105xxVGDN	PT115xxVBEC
	Page	166	166	170	172	172	168	167	168	161	162	162	171	171	159	159	160	161	163	164	164	165	169	169	173	173
RP023xxHBWC	100																									
RP023xxHBNF	100																									
RP043xxHBLC	101																									
RP043xxHBLD	101																									
RP043xxHBLF	102																									
RP043xxHBLS	102																									
RW043xxHBLC	103																									
RW043xxHBLD	103																									
RW043xxHBLF	104																									
RW043xxHBLS	104																									
RP013xxVBWN	105																									
RP033xxVBLC	105																									
RP034xxHBLN	106																									
RP034xxHBLO	106																									
RP034xxVBLN	107																									
RP034xxVBLF	107																									
RP025xxIBWC	108	●	●	●	●	●																				
RP025xxIBWU	108	●	●	●	●	●																				
RP025xxHBWC	109	●	●	●	●	●																				
RP025xxHBLC	110						●																			
RP025xxIBLC	110		●																							
RP095xxRBWC	111							●	●																	
RP095xxBBWC	111							●	●																	
RP095xxHBWC	112							●	●																	
RP015xxWBWC	112									●	●	●	●	●												
RP015xxWBLC	113									●	●	●	●	●												
RP015xxVBLC	113														●	●	●	●	●	●	●	●	●	●	●	●
RP015xxSBLC	114														●	●	●	●	●	●	●	●	●	●	●	●
RP015xxVBLF	114																									
RP085xxVBLC	115										●	●		●			●	●								
RP035xxIBLN	115									●	●	●	●	●												
RP035xxHBLC	116														●	●	●	●		●	●		●	●		●
RP035xxHBLD	116														●	●	●	●	●	●	●	●	●	●	●	●
RP026xxIBWU	118																									
RP016xxVBLC	118																									
RP016xxSBLC	119																									
RP016xxVBLF	119																									
RP036xxHBLC	120																									
RP036xxHBLD	120																									
RP036xxHBLF	121																									
RP036xxHBLS	121																									
RP018xxVBLC	122																									
RP029xxIBWC	123																									
RP019xxWBLC	123																									
RP039xxHBLC	124																									
RP019xxVBLC	124																									
RP019xxVBLF	125																									
RP01AxxVBLC	126																									
RP01AxxVBLF	126																									
RP03AxxHBLC	127																									
RP03AxxHBLD	127																									
RP03AxxHBLF	128																									
RP03AxxHBLS	128																									

Pin headers / Screw type terminal blocks	Page	PT115xxVBBN	PT165xxVGDN	PT175xxVGDN	PR065xxHBBF	PT115xxHBBF	PR065xxVBBF	PT115xxVBBF	PR016xxVBHC	PR016xxVBVC	PM016xxVBHC	PR066xxHBEC	PR066xxHBBN	PT106xxHGDN	PT116xxHBEC	PT116xxHBBN	PR066xxVBEC	PR066xxVBBN	PT106xxVGDN	PT116xxVBEC	PT116xxVBBN	PT166xxHGDN	PT166xxVGDN	PT116xxHBBF	PR066xxHBBF	PT116xxVBBF
	Page	174	175	175	160	165	170	174	179	180	180	176	176	177	177	178	182	182	183	183	184	179	185	178	181	184
RP023xxHBWC	100																									
RP023xxHBNF	100																									
RP043xxHBLC	101																									
RP043xxHBLD	101																									
RP043xxHBLF	102																									
RP043xxHBLS	102																									
RW043xxHBLC	103																									
RW043xxHBLD	103																									
RW043xxHBLF	104																									
RW043xxHBLS	104																									
RP013xxVBWN	105																									
RP033xxVBLC	105																									
RP034xxHBLN	106																									
RP034xxHBLO	106																									
RP034xxVBLN	107																									
RP034xxVBLF	107																									
RP025xxIBWC	108																									
RP025xxIBWU	108																									
RP025xxHBWC	109																									
RP025xxHBLC	110																									
RP025xxIBLC	110																									
RP095xxRBWC	111																									
RP095xxBBWC	111																									
RP095xxHBWC	112																									
RP015xxWBWC	112																									
RP015xxWBLC	113																									
RP015xxVBLC	113	●	●	●																						
RP015xxSBLC	114	●	●	●																						
RP015xxVBLF	114				●	●	●	●																		
RP085xxVBLC	115																									
RP035xxIBLN	115																									
RP035xxHBLC	116	●																								
RP035xxHBLD	116	●	●	●																						
RP026xxIBWU	118								●	●	●															
RP016xxVBLC	118											●	●	●	●	●	●	●	●	●	●					
RP016xxSBLC	119											●	●	●	●	●	●	●	●	●	●	●	●			
RP016xxVBLF	119																							●	●	●
RP036xxHBLC	120											●	●		●	●	●			●	●					
RP036xxHBLD	120											●	●		●	●	●			●	●	●	●			
RP036xxHBLF	121																							●		●
RP036xxHBLS	121																							●		●
RP018xxVBLC	122																									
RP029xxIBWC	123																									
RP019xxWBLC	123																									
RP039xxHBLC	124																									
RP019xxVBLC	124																									
RP019xxVBLF	125																									
RP01AxxVBLC	126																			●	●					
RP01AxxVBLF	126																									
RP03AxxHBLC	127																									
RP03AxxHBLD	127																									
RP03AxxHBLF	128																									
RP03AxxHBLS	128																									

Pin headers / Screw type terminal blocks		PT118xxHBEC	PT118xxHBBC	PT118xxVBEC	PT118xxVBBC	PT069xxVBVN	PT049xxHBBN	PT049xxVBBN	PT119xxVBBN	PT119xxHBBF	PT119xxVBBF	PT11AxxHBEC	PT11AxxHBBN	PT11AxxHBBF	PT11AxxVBBF	PT11AxxVBEC	PT11AxxVBBN
	Page	186	186	187	187	189	188	190	190	189	191	192	192	193	194	193	194
RP023xxHBWC	100																
RP023xxHBNF	100																
RP043xxHBLC	101																
RP043xxHBLD	101																
RP043xxHBLF	102																
RP043xxHBLS	102																
RW043xxHBLC	103																
RW043xxHBLD	103																
RW043xxHBLF	104																
RW043xxHBLS	104																
RP013xxVBWN	105																
RP033xxVBLC	105																
RP034xxHBLN	106																
RP034xxHBLO	106																
RP034xxVBLN	107																
RP034xxVBLF	107																
RP025xxIBWC	108																
RP025xxIBWU	108																
RP025xxHBWC	109																
RP025xxHBLC	110																
RP025xxIBLC	110																
RP095xxRBWC	111																
RP095xxBBWC	111																
RP095xxHBWC	112																
RP015xxWBWC	112																
RP015xxWBLC	113																
RP015xxVBLC	113																
RP015xxSBLC	114																
RP015xxVBLF	114																
RP085xxVBLC	115																
RP035xxIBLN	115																
RP035xxHBLC	116																
RP035xxHBLD	116																
RP026xxIBWU	118																
RP016xxVBLC	118																
RP016xxSBLC	119																
RP016xxVBLF	119																
RP036xxHBLC	120																
RP036xxHBLD	120																
RP036xxHBLF	121																
RP036xxHBLS	121																
RP018xxVBLC	122	●	●	●	●												
RP029xxIBWC	123					●											
RP019xxWBLC	123						●	●									
RP039xxHBLC	124								●								
RP019xxVBLC	124								●								
RP019xxVBLF	125									●	●						
RP01AxxVBLC	126											●	●				
RP01AxxVBLF	126													●	●		
RP03AxxHBLC	127											●	●			●	●
RP03AxxHBLD	127											●	●			●	●
RP03AxxHBLF	128													●	●		
RP03AxxHBLS	128													●	●		

Accessories / Spring clamp terminal blocks		700025	720036	720036
	Page	298	289	289
SP043xxVBNN	48	●		
SP044xxVBNN	50	●		
SP064xxVGNN	50	●		
SP064xxVGNF	51	●		
SP025xxHDNC	52		●	●
SP045xxVBNC	53	●		
SP065xxVBNC	54	●		
SP065xxVBPC	54	●		
SP065xxVBNF	55	●		
SP065xxVBPF	55	●		
SP995xxVBNC	56	●		
SP046xxVBNC	57	●		
SP066xxVBNC	57	●		
SP066xxVBPC	58	●		
SP066xxVBNF	58	●		
SP066xxVBPF	59	●		
SP049xxVBNC	60	●		
SP129xxVBNF	60	●		
SP04AxxVBNC	61	●		

Accessories / Screw type terminal blocks		711401	711401	720158	720158	720159	720159	720243	720243	710084	710085	710121	710122	716846	750150	750151	750313	750314	720161	720161	716906	700025				
	Page	294	294	288	288	291	291	296	297	285	285	290	290	293	286	286	287	287	292	292	293	298				
RT075xxHBLU	81	●	●																							
RT076xxHBLU	88	●	●																							
RP023xxHBWC	100			●	●	●	●																			
RP023xxHBNF	100			●	●	●	●																			
RP013xxVBWN	105							●	●																	
RP025xxIBWC	108									●	●	●	●	●												
RP025xxIBWU	108											●	●	●	●	●										
RP025xxHBWC	109									●	●	●	●	●												
RP025xxMBWC	109									●	●	●	●	●												
RP025xxHBLC	110					●	●										●	●								
RP025xxIBLC	110													●			●	●	●	●						
RP015xxWBWC	112																				●					
RP015xxWBLC	113																				●					
RP015xxVBLC	113																					●				
RP015xxSBLC	114																					●				
RP015xxVBLF	114																					●				
RP085xxVBLC	115																					●				
RP035xxHBLC	116																					●				
RP035xxHBLD	116																					●				
RP026xxIBWU	118											●	●	●	●	●										
RP016xxVBLC	118																					●				
RP016xxSBLC	119																					●				
RP016xxVBLF	119																					●				
RP036xxHBLC	120																					●				
RP036xxHBLD	120																					●				
RP036xxHBLF	121																					●				
RP036xxHBLS	121																					●				
RP018xxVBLC	122																					●				
RP029xxIBWC	123									●	●	●	●	●												
RP019xxWBLC	123																				●					
RP039xxHBLC	124																					●				
RP019xxVBLC	124																					●				
RP019xxVBLF	125																					●				
RP01AxxVBLF	126																					●				
RP03AxxHBLC	127																					●				
RP03AxxHBLD	127																					●				
RP03AxxHBLF	128																					●				
RP03AxxHBLS	128																					●				

Accessories / Pin headers		720293	LED-light transmitter for headers, pluggable	LED-light transmitter for headers, pluggable	LED-light transmitter for headers, pluggable	720243	720243	LED-light transmitter for headers, pluggable	LED-light transmitter for headers, pluggable	LED-light transmitter for headers, pluggable	700024
	Page	296	295	295	295	296	297	295	295	295	297
PR043xxHBBN	146	●									
PR043xxHBBF	147	●									
PT093xxHBBN	149	●	●	●	●						
PT093xxHBBF	149	●	●	●	●						
PT113xxHBBN	150					●	●				
PR043xxVBBN	151	●									
PR043xxVBBF	151	●									
PT093xxVBBN	154	●									
PT113xxVBBN	154					●	●				
PR044xxHBBN	155	●						●	●	●	
PR044xxHBBF	155	●						●	●	●	
PT094xxHBBN	156	●									
PT094xxHBBF	156	●									
PR044xxVBBN	157	●									
PR044xxVBBF	157	●									
PT094xxVBBN	158	●									
PT094xxVBBF	158	●									
PR065xxHBEC	159										●
PR065xxHBBN	159										●
PR065xxHBBF	160										●
PR075xxHBEL	160										●
PR075xxHBER	161										●
PT115xxHBEC	164										●
PT115xxHBBN	164										●
PT115xxHBBF	165										●
PR065xxVBEC	169										●
PR065xxVBBN	169										●
PR065xxVBBF	170										●
PT115xxVBEC	173										●
PT115xxVBBN	174										●
PT115xxVBBF	174										●
PR066xxHBEC	176										●
PR066xxHBBN	176										●
PT116xxHBEC	177										●
PT116xxHBBN	178										●
PT116xxHBBF	178										●
PR066xxHBBF	181										●
PR066xxVBBF	181										●
PR066xxVBEC	182										●
PR066xxVBBN	182										●
PT116xxVBEC	183										●
PT116xxVBBN	184										●
PT116xxVBBF	184										●
PT118xxHBEC	186										●
PT118xxHBBC	186										●
PT118xxVBEC	187										●
PT118xxVBBC	187										●
PT119xxHBBF	189										●
PT119xxVBBN	190										●
PT119xxVBBF	191										●
PT11AxxHBEC	192										●
PT11AxxHBBN	192										●
PT11AxxVBEC	193										●
PT11AxxVBBN	194										●
PT11AxxVBBF	194										●
PR20BxxHBDN	203										

Types and certification index

Approvals

- ● Approval exists
- ❍ Approval pending

P/N	Page					
ST061xxHDNN	23	❍				●
ST021xxHDNN	23	●				●
ST041xxDDNN	24	●				●
ST072xxHGNN	25	●				●
ST072xxVGNN	25	●				●
SR213xxHBNC	26	●				●
SR213xxHBPC	26	●				●
SR213xxDBNC	27	●				●
SR213xxDBPC	27	❍				●
SR213xxVBNC	28	●				●
SR213xxVBPC	28	●				●
ST024xxHDNC	29	●				●
SR215xxHBNC	30	●				●
SR215xxHBPC	30	●				●
ST065xxHDNN	31	●				●
ST025xxHDNC	31	●				●
ST055xxHBNC	32	●				●
ST095xxHDNN	32	●				●
SR215xxDBNC	33	●				●
ST045xxDDNC	33	●				●
ST135xxDDNC	34	●				●
ST175xxLDNN	34		●			●
ST185xxLDNN	35		●			●
SR215xxVBNC	35	●				●
SR215xxVBPC	36	●				●
ST105xxVDNN	36	●				●
ST125xxVDNN	37	●				●
ST145xxVDNN	37	●				●
ST176xxLDNN	38		●			●
ST186xxLDNN	38		●			●
ST067xxHDNN	39	●				●
ST027xxHDNC	39	●				●
ST057xxHBNC	40	●				●
ST047xxDDNC	40	●				●
ST137xxDDNC	41	●				●
ST177xxLDNN	41	❍				●
ST187xxLDNN	42	❍				●
ST098xxHDNN	43	●				●
ST178xxLDNN	43	❍				●
ST188xxLDNN	44	❍				●
ST108xxVDNN	44	●				●
ST128xxVDNN	45	●				●
ST059xxHBNC	46	●				●
ST139xxDDNC	46	●				●
SP051xxVGNN	47	●				●
SP043xxVBNN	48	●				●
SW063xxVBNN	48	●				❍
SP063xxVGNN	49	●				❍
SP063xxVGNF	49	●				❍
SP044xxVBNN	50	●				●
SP064xxVGNN	50	●				●
SP064xxVGNF	51	●				●
SP025xxHDNC	52	●				●
SP145xxHBNC	52	●				●
SP155xxHBNC	53	●				●

P/N	Page					
SP045xxVBNC	53	●				❍
SP065xxVBNC	54	●				❍
SP065xxVBPC	54	●				❍
SP065xxVBNF	55	●				❍
SP065xxVBPF	55	●				❍
SP995xxVBNC	56	❍				❍
SP046xxVBNC	57	●				❍
SP066xxVBNC	57	●				❍
SP066xxVBPC	58	●				❍
SP066xxVBNF	58	●				❍
SP066xxVBPF	59	●				❍
SP049xxVBNC	60	●				❍
SP129xxVBNF	60	●				❍
SC305xxHBNN	62	❍				❍
SL305xxHBNN	62	❍				❍
SM99S	63	❍				❍
SR99S	63	❍				❍
RT063xxHBNC	69	●				●
RT063xxHBWC	69	●				●
RT063xxOBWC	70	●				●
RT063xxPBWC	70	❍				●
RT033xxHBLU	71	●				●
RT083xxDBWC	71	●				●
RT043xxLBLC	72	●				●
RT063xxVBWC	72	●				●
RT033xxVBLU	73	●				●
RT034xxHBLC	74	●				●
RT015xxHDWC	75	●				●
RT015xxHDWU	75	●				●
RT135xxHBWC	76	●				●
RT045xxHBWC	76	●				●
RT045xxMBWC	77	●				●
RT055xxHBLC	77	●				●
RT025xxHBLC	78	●				●
RT025xxHBLU	78	●				●
RT145xxHBVC	79	●				●
RT145xxMBLC	79	●				●
RT165xxHBNC	80	●				●
RT035xxHBLU	80	●				●
RT075xxHBLU	81	●				●
RT205xxHBLU	81	●				●
RT025xxOGLU	82	●				●
RT025xxHDLL	82	●				●
RT025xxHDLR	83	●				●
RT085xxDBWC	83	●				●
RT045xxUBLC	84	●				●
RT015xxVDWC	84	●				●
RT095xxVBWC	85	●				●
RT016xxHBWC	86	●				●
RT056xxHBLU	86	●				●
RT036xxHBLU	87	●				●
RT046xxHBWU	87	●				●
RT076xxHBLU	88	●				●
RT206xxHBLU	88	●				●
RT026xxHBLU	89	●				●

Approvals

- ● Approval exists
- ❍ Approval pending

P/N	Page					
RT016xxVBWC	89	●				●
RT11LxxHGLU	90	●				●
RT137xxHBWC	91	●				●
RT027xxHBLC	91	●				●
RT10NxxHGLU	92	●				●
RT019xxHDWC	93	●				●
RT019xxHDWC	93	●				●
RT139xxHBWC	94	●				●
RT049xxHBWC	94	●				●
RT049xxMBWC	95	●				●
RT059xxHBLC	95	●				●
RT029xxHBLC	96	●				●
RT149xxMBLC	96	●				●
RT049xxUBLC	97	●				●
RT019xxVDWC	97	●				●
RT099xxVBWC	98	●				●
RT01AxxVBWC	99	●				●
RP023xxHBWC	100	●				●
RP023xxHBNF	100	●				●
RP043xxHBLC	101	●				●
RP043xxHBLD	101	●				●
RP043xxHBLF	102	●				●
RP043xxHBLS	102	●				●
RW043xxHBLC	103	●				●
RW043xxHBLD	103	●				●
RW043xxHBLF	104	●				●
RW043xxHBLS	104	●				●
RP013xxVBWN	105	●			●	
RP033xxVBLC	105	●				●
RP034xxHBLN	106	●				●
RP034xxHBLO	106	●				●
RP034xxVBLN	107	●				●
RP034xxVBLF	107	●				●
RP025xxIBWC	108	●				●
RP025xxIBWU	108	●				●
RP025xxHBWC	109	●				●
RP025xxMBWC	109	●				●
RP025xxHBLC	110	●				●
RP025xxIBLC	110	●				●
RP095xxRBWC	111	●				●
RP095xxBBWC	111	●				●
RP095xxHBWC	112	●				●
RP015xxWBWC	112	●				●
RP015xxWBLC	113	●				●
RP015xxVBLC	113	●				●
RP015xxSBLC	114	●				●
RP015xxVBLF	114	●				●
RP085xxVBLC	115	●				●
RP035xxIBLN	115	●				●
RP035xxHBLC	116	●				●
RP035xxHBLD	116	●				●
RP995xxVDNN	117	●				
RP026xxIBWU	118	●			●	
RP016xxVBLC	118	●				●
RP016xxSBLC	119	●				●

P/N	Page					
RP016xxVBLF	119	●				●
RP036xxHBLC	120	●				●
RP036xxHBLD	120	●				●
RP036xxHBLF	121	●				●
RP036xxHBLS	121	●				●
RP018xxVBLC	122		●			●
RP029xxIBWC	123	●				●
RP019xxWBLC	123	●				●
RP039xxHBLC	124	●				●
RP019xxVBLC	124	●				●
RP019xxVBLF	125	●				●
RP01AxxVBLC	126	●				●
RP01AxxVBLF	126	●				●
RP03AxxHBLC	127	●				●
RP03AxxHBLD	127	●				●
RP03AxxHBLF	128	●				●
RP03AxxHBLS	128	●				●
IT023xxHDNU	137	●				●
PT091xxHGBN	145	●				●
PT091xxVGBN	145	●				●
PR013xxVBHC	146	●				
PR043xxHBBN	146	●				●
PR043xxHBBF	147	●				●
PW063xxHBEC	147	●				❍
PW063xxHBBN	148	●				❍
PW063xxHBBF	148	●				❍
PT093xxHBBN	149	●				●
PT093xxHBBF	149	●				●
PT113xxHBBN	150	●				●
PR033xxVBHC	150	●				●
PR043xxVBBN	151	●				●
PR043xxVBBF	151	●				●
PW063xxVBEC	152	●				❍
PW063xxVBBN	152	●				❍
PW063xxVBBF	153	●				❍
PM013xxVBHC	153	●				
PT093xxVBBN	154	●				●
PT113xxVBBN	154	●				●
PR044xxHBBN	155	●				●
PR044xxHBBF	155	●				●
PT094xxHBBN	156	●				●
PT094xxHBBF	156	●				●
PR044xxVBBN	157	●				●
PR044xxVBBF	157	●				●
PT094xxVBBN	158	●				●
PT094xxVBBF	158	●				●
PR065xxHBEC	159	●				●
PR065xxHBBN	159	●				●
PR065xxHBBF	160	●				●
PR075xxHBEL	160	●				●
PR075xxHBER	161	●				●
PT045xxHBEC	161	●				●
PT045xxHBBN	162	●				●
PT045xxHBVC	162		●			●
PT055xxHBHC	163	●				●

Approvals

- ● Approval exists
- ❍ Approval pending

P/N	Page					
PT105xxHGDN	163	●				●
PT115xxHBEC	164	●				●
PT115xxHBBN	164	●				●
PT115xxHBBF	165	●				●
PT165xxHGDN	165	●				●
PR015xxVBHC	166	●				●
PR015xxVBVC	166	●				●
PM015xxVBHC	167		●			
PM025xxVBHC	167	●				
PR035xxVBHC	168	●				●
PR055xxVBHC	168	●				●
PR065xxVBEC	169	●				●
PR065xxVBBN	169	●				●
PR065xxVBBF	170	●				●
PM035xxVBHC	170	●				
PT045xxVBEC	171	●				●
PT045xxVBBN	171	●				●
PT065xxVBEN	172	●				●
PT065xxVBVN	172	●				●
PT105xxVGDN	173	●				●
PT115xxVBEC	173	●				●
PT115xxVBBN	174	●				●
PT115xxVBBF	174	●				●
PT165xxVGDN	175	●				●
PT175xxVGDN	175	●				
PR066xxHBEC	176	●				●
PR066xxHBBN	176	●				●
PT106xxHGDN	177	●				●
PT116xxHBEC	177	●				●
PT116xxHBBN	178	●				●
PT116xxHBBF	178	●				●
PT166xxHGDN	179	●				●
PR016xxVBHC	179	●				●
PR016xxVBVC	180	●				●
PM016xxVBHC	180	❍		❍		
PR066xxHBBF	181	●				●
PR066xxVBBF	181	●				●
PR066xxVBEC	182	●				●
PR066xxVBBN	182	●				●
PT106xxVGDN	183	●				●
PT116xxVBEC	183	●				●
PT116xxVBBN	184	●				●
PT116xxVBBF	184	●				●
PT166xxVGDN	185	●				●
PT118xxHBEC	186	●				●
PT118xxHBBC	186	●				●
PT118xxVBEC	187	●				●
PT118xxVBBC	187	●				●
PT049xxHBVC	188		●			●
PT049xxHBBN	188	●				●
PT119xxHBBF	189	●				●
PT069xxVBVN	189	●				●
PT049xxVBBN	190	●				●
PT119xxVBBN	190	●				●
PT119xxVBBF	191	●				●

P/N	Page					
PT11AxxHBEC	192	●				●
PT11AxxHBBN	192	●				●
PT11AxxHBBF	193	●				●
PT11AxxVBEC	193	●				●
PT11AxxVBBN	194	●				●
PT11AxxVBBF	194	●				●
FW143XXVBFC	197		●			●
FT143xxVBFC	197		●			●
FT085xxVBFC	198					●

Notes

Generic specifications

Rating of creepage and clearance distances

The creepage and clearance distances of the U|Contact terminal blocks and headers are rated according to EN 60664-1.

Rated voltage, overvoltage category and pollution degree applicable in practice can be determined only after soldering the terminal block or header onto the printed circuit board. Important factors for the rating are the minimum distance of the circuit paths, the relatively low resistance against creepage current of the printed circuit board and the absence of separating ribs.

Since we are unable to influence these factors the insulation data given for all U|Contact terminal blocks and U|Contact headers relate to their independent condition.

Explanatory notes regarding the determination of Clearance and creepage distances

The standard EN 60664-1 uses the overvoltage category and the pollution degree to determine the Clearance and creepage distances.

The overvoltage category is divided into four subcategories and determines the strength of the rated transient voltage in conjunction with the mains voltage.

The rated transient voltage basically determines the minimum clearance.

Minimum clearances apply to use on location up to a height of 2000 m above sea level.

The pollution degree is divided into four degrees and determines, in combination with insulating material and the shape of the separating ribs, the creepage distance.

Overvoltage category according to EN 60664-1

Equipment energized directly from the low-voltage mains

Technical data shall specify the overvoltage category as based on the following general explanation of overvoltage categories (see also IEC 364-4-443):

Equipment of overvoltage category I

is equipment for connection to circuits in which measures are taken to limit transient overvoltages to an appropriately low level. Examples are protected electronic circuits.

Equipment of overvoltage category II

is energy-consuming equipment to be supplied from the fixed installation. Examples of such equipment are appliances, portable tools and other household and similar loads.

Equipment of overvoltage category III

is equipment in fixed installations and for cases where the reliability and the availability of the equipment are subject to special requirements. Examples of such equipment are switches in the fixed installation and equipment for industrial use with permanent connection to the fixed installation.

Equipment of overvoltage category IV

is for use at the origin of the installation. Examples of such equipment are electricity meters and primary overcurrent protection equipment.

Degrees of pollution in the micro-environment according to EN 60664-1

The following four degrees of pollution in the micro-environment are established for the purpose of evaluating creepage distances and clearances:

Pollution degree 1

No pollution or only dry, non-conductive pollution occurs. The pollution has no influence.

Pollution degree 2

Only non-conductive pollution occurs except that occasionally a temporary conductivity caused by condensation is to be expected.

Pollution degree 3

Conductive pollution occurs or dry non-conductive pollution occurs which becomes conductive due to condensation which can be expected.

Pollution degree 4

The pollution generates continuous conductivity caused by conductive dust or by rain or snow.

Usage temperature

The usage temperature defines the temperature for the permanent operation of a component without destruction. This temperature is the addition of ambient temperature and the self-warming of the component during operation.

The ambient temperature is the temperature affecting permanently the component without regard to the self-warming of the component.

Temperature limits for product series screw type terminal blocks, ID terminal blocks, headers and accessories as well as spring clamp terminal blocks without lever or push button (i.e. ST061):

max. temperature limit +105 °C
min. temperature limit -40 °C

Temperature limits for spring clamp terminal blocks with lever or push button:

max. temperature limit +105 °C
min. temperature limit -40 °C

Example for rating work sheets (based on case A) (basic insulation at permanent voltage for equipment up to 2000 m above sea level) according to EN 60664-1.

Circuits directly connected to the low voltage mains

influence quantity	selection based on	reference to EN 60664-1	value
clearance			
impulse withstand voltage	overvoltage category of the equipment	table 1	table 2
creepage distance			
voltage	Rated voltage [V] or rated insulation voltage	table 3a, 3b	table 4
pollution (influence of humidity)	pollution degree (micro-environment)	section 2.5.1	table 4
insulation material	comparative tracking index	section 2.7.1.3	table 4

step 1 - selection of the overvoltage category
step 2 - selection of the impulse voltage, according to table 1
step 3 - determination of the minimum clearance (cl), according to table 2
step 4 - selection of the Rated voltage for creepage distances according to tables 3a and 3b
step 5 - determination of the pollution degree and the comparative tracking index (CTI)
step 6 - determination of the minimum creepage distance (cr), according to table 4
step 7 - if cr < cl:
- for pollution degree 3 or 4 the distance on the insulation material is as large as the clearance (cl), according to table 4;
- for pollution degree 1 or 2 the distance on the insulation material is allowed to be as large as the creepage distance (cr), if this distance withstands the test impulse voltage used to establish the clearance.

Rated impulse voltage for equipment energized directly from the low-voltage mains Extract of table 1 EN 60664-1

nominal Voltage of the power supply system [1] according to IEC 60038 [3] V		Tension cable to neutral cable separated from the nominal alternative or nominal direct current until ... inclusive	Rated test voltage [2] V			
			Overvoltage category [4]			
dreiphasig	einphasig	V	I	II	III	IV
	120 - 240	50	330	500	800	1500
		100	500	800	1500	2500
		150	800	1500	2500	4000
230/400 277/480		300	1500	2500	4000	6000
400/690		600	2500	4000	6000	8000
1000		1000	4000	6000	8000	12000

note: cf. details EN 60664-1:2003

Minimum clearances for insulation coordination
Extract of table EN 60664-1

Rated impulse with stand-voltage	Minimum clearances up to 2000 m above sea level		
	Case A in homogeneous field conditions		
	Pollution degree		
kV	1 mm	2 mm	3 mm
0,33	0,01		
0,40	0,02		
0,50	0,04		
0,60	0,06	0,20	0,80
0,80	0,10		
1,00	0,15		
1,20	0,25	0,25	
1,50	0,50	0,50	
2,00	1,00	1,00	1,00
2,50	1,50	1,50	1,50
3,00	2,00	2,00	2,00
4,00	3,00	3,00	3,00
5,00	4,00	4,00	4,00
6,00	5,50	5,50	5,50
8,00	8,00	8,00	8,00
10,00	11,00	11,00	11,00
12,00	14,00	14,00	14,00
15,00	18,00	18,00	18,00
20,00	25,00	25,00	25,00
25,00	33,00	33,00	33,00
30,00	40,00	40,00	40,00
40,00	60,00	60,00	60,00
50,00	75,00	75,00	75,00
60,00	90,00	90,00	90,00
80,00	130,00	130,00	130,00
100,00	170,00	170,00	170,00

note: cf. details EN 60664-1:2003

Extract from table 3a: single phase three- or two-wire a.c. or d.c. systems EN 60664-1

Nominal voltage of the supply system*	Voltages rationalized for table 4	
	for insulation line-to-line[1)]	for insulation line-to-earth[1)]
	all systems	three-wire systems mid-point earthed
V	V	V
12.5	12.5	
24 25	25	
30	32	
42 48 50**	50	
60	63	
30-60	63	32
100**	100	
110 120	125	
150**	160	
220	250	
110-220 120-240	250	125
300**	320	
220-440	500	250
600**	630	
480-960	1000	500
1000**	1000	

1) Line-to-earth insulation level for unearthed or impedance-earthed systems equals that for line-to-line because the operating voltage to earth of any line can, in practice, approach full line-to-line voltage. This is because the actual voltage to earth is determined by the insulation resistance and capacitive reactance of each line to earth; thus, low (but acceptable) insulation resistance of one line can in effect earth it and raise the other two to full line-to-line voltage to earth.

* For relationship to Rated voltage see 2.2.1.(+)

** These values correspond to the values given in table 1 (Rated impulse voltage for equipment energized directly from the low-voltage mains).

Extract of table 3b: three-phase four- or three-wire a.c. systems EN 60664-1

Nominal voltage of the supply system*	Voltages rationalized for table 4		
	for insulation line-to-line	for insulation line-to-earth	
	all systems	three-phase four-wire systems neutral-earthed[2]	three-phase three-wire systems unearthed[1] or corner-earthed
V	V	V	V
60	63	32	63
110 120 127	125	80	125
150**	160	--	160
208	200	125	200
220 230 230	250	160	250
300**	320	--	320
380 400 415	400	250	400
440	500	250	500
480 500	500	320	500
575	630	400	630
600**	630	--	630
660 690	630	400	630
720 830	800	500	800
960	1000	630	1000
1000**	1000	--	1000

1) Line-to-earth insulation level for unearthed or impedance-earthed systems equals that for line-to-line because the operating voltage to earth of any line can, in practice, approach full line-to-line voltage. This is because the actual voltage to earth is determined by the insulation resistance and capacitive reactance of each line to earth; thus, low (but acceptable) insulation resistance of one line can in effect earth it and raise the other two to full line-to-line voltage to earth.

2) For equipment for use on both three-phase four-wire and three-phase three-wire supplies, earthed and unearthed, use the values for three-wire systems only.

* For relationship to Rated voltage see 2.2.1.(+)

** These values correspond to the values given in table 1 (Rated impulse voltage for equipment energized directly from the low-voltage mains).

Minimum creepage distances to avoide failure caused by tracking
Extract of table 4 DIN EN 60664-1

Voltage[1] r.m.s. value	Minimal creepage distances								
	Printed circuits Pollution degree		Pollution degree	Pollution degree			Pollution degree		
	1	2	1	2			3		
	All insulation material groups	All insulation material groups except IIIb3	All insulation material groups	Insulation material group			Insulation material group		
				I	II	III	I	II	III[2]
V	mm	mm	mm	mm	mm	mm	mm	mm	mm
10	0,025	0,040	0,080	0,400	0,400	0,400	1,000	1,000	1,000
12,5	0,025	0,040	0,090	0,420	0,420	0,420	1,050	1,050	1,050
16	0,025	0,040	0,100	0,450	0,450	0,450	1,100	1,100	1,100
20	0,025	0,040	0,110	0,480	0,480	0,480	1,200	1,200	1,200
25	0,025	0,040	0,125	0,500	0,500	0,500	1,250	1,250	1,250
32	0,025	0,040	0,140	0,530	0,530	0,530	1,300	1,300	1,300
40	0,025	0,040	0,160	0,560	0,800	1,100	1,400	1,600	1,800
50	0,025	0,040	0,180	0,600	0,850	1,200	1,500	1,700	1,900
63	0,040	0,063	0,200	0,630	0,900	1,250	1,600	1,800	2,000
80	0,063	0,100	0,220	0,670	0,950	1,300	1,700	1,900	2,100
100	0,100	0,160	0,250	0,710	1,000	1,400	1,800	2,000	2,200
125	0,160	0,250	0,280	0,750	1,050	1,500	1,900	2,100	2,400
160	0,250	0,400	0,320	0,800	1,100	1,600	2,000	2,200	2,500
200	0,400	0,630	0,420	1,000	1,400	2,000	2,500	2,800	3,200
250	0,560	1,000	0,560	1,250	1,800	2,500	3,200	3,600	4,000
320	0,750	1,600	0,750	1,600	2,200	3,200	4,000	4,500	5,000
400	1,000	2,000	1,000	2,000	2,800	4,000	5,000	5,600	6,300
500	1,300	2,500	1,300	2,500	3,600	5,000	6,300	7,100	8,000
630	1,800	3,200	1,800	3,200	4,500	6,300	8,000	9,000	10,000
800	2,400	4,000	2,400	4,000	5,600	8,000	10,000	11,000	12,500
1000	3,200	5,000	3,200	5,000	7,100	10,000	12,500	14,000	16,000

1) This voltage is
- for functional isolation: the working voltage;
- for basic and supplementary insulation of the circuit energized directly from the low-voltage mains: the rationalized voltage based on the rated voltage of the equipment, or the rated insulation voltage;
- for basic or supplementary insulation of systems, equipment and internal circuits not energized directly from the low-voltage mains: the highest r.m.s. voltage which can occur in the system, equipment or internal circuit when supplied at Rated voltage, and under the most onerous combination of conditions of operating within equipment rating.

2) insulation material group IIIb is not recommended for pollution degree 3 above 630 V

Note: For details see DIN EN 60664-1:2007

Current carrying capacity

The maximum current carrying capacity (rated current) is indicated in the technical data of each terminal block. It considers the heating limit indicated in EN 60998-1. According to this standard the self-heating of current carrying parts of the termination point shall not exceed 45 K. In case of insulated conductors, the heating of a conductor has to be measured as near as possible to the termination point in the terminal block.

Termination has to be done with rigid or flexible conductors of the biggest cross section that the wire entry is designed for. The connecting material is charged with alternate current according to table 2 during the whole test.

rated wire cross section	test current
mm²	A
0.5	6
0.75	9
1	13.5
1.5	17.5
2.5	24
4	32
6	41
10	57
16	76
25	101
35	125

The current carrying capacity also depends on the use of the terminal block or connector. It is also necessary to consider the respective directives for appliances such as EN 60335-1, EN 60598-1, EN 60664 etc.

Rated current

is the value of current that a plug-in connector or coupler can carry continuously (not intermittently) and simultaneously through all contacts without exceeding the upper temperature limit.

The determination of the rated current value according to DIN VDE / IEC is different than according to UL.

Rated voltage

is the value of voltage according to which plug-in connectors and couplers are rated and to which certain operation characteristics are referred.

Wire cross section

The wire cross section for printed circuit board connectors and couplers as well as the admissible wire size range is defined according to IEC 60939-1 and given in the technical data of each series.

The contacts of RIA printed circuit board connectors and couplers are designed to allow termination of copper wires without special preparation. The use of wire ferrules is not necessary, but can prevent wire strands from separating.

Note

Conductors with soldered single wires are not allowed for connection to screw type terminal blocks, due to the cold flow of tin.

Screw type terminal blocks / Spring clamp terminal blocks pluggable terminal blocks

No current should be applied when terminal blocks are plugged or wired. Empirical values are available on demand if small currents are necessary for operational reasons.

Copper conductors according to EN 60228

Single wire

Wire diameter = 1.78 mm
Number of wires = 1
Conductor dia. max. = 1.9 mm
Nominal cross section = 2.5 mm²

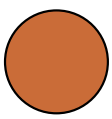

Multi-wire

Wire diameter = 0.67 mm
Number of wires = 7
Conductor dia. max. = 2.2 mm
Nominal cross section = 2.5 mm²

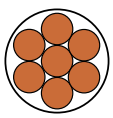

Fine stranded

Wire diameter = 0.26 mm
Number of wires = 45
Conductor dia. max. = 2.3 mm
Nominal cross section = 2.5 mm²

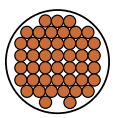

Ultra-fine stranded

Wire diameter = 0.16 mm
Number of wires = 120
Conductor dia. max. = 2.3 mm
Nominal cross section = 2.5 mm²

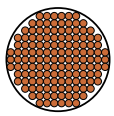

Structure and dimensions of conductors

according to DIN VDE 0295/1992-06 (IEC 60228)						American Wire Gauge (AWG)						
nominal cross section	single wire	multi-wire		fine and ultra-fine stranded		solid wire				stranded wire		
			min. no. of wires		min. no. of wires							
mm²	max. dia. mm	max. dia. mm		max. dia. mm		AWG no.	dia. mm	circ. mil	mm²	dia. mm	circ. mil	mm²
0.5	0.9	1.1	7	1.1	15	20	0.81	1020	0.52	0.97	1111	0.56
0.75	1.0	1.2	7	1.3	22	18	1.02	1620	0.82	1.16	1600	0.82
1	1.2	1.4	7	1.5	29	(17)	1.15	2050	1.04			
-		-	-	-	-	16	1.29	2580	1.31	1.50	2580	1.32
1.5	1.5	1.7	7	1.8	29	(15)	1.45	3260	1.65			
-		-	-	-	-	14	1.63	4110	2.08	1.85	4100	2.09
2.5	1.9	2.2	7	2.3	47	(13)	1.83	5180	2.63			
-		-	-	-	-	12	2.05	6530	3.31	2.41	6500	3.32
4	2.4	2.7	7	2.9	53	(11)	2.3	8230	4.17			
-		-	-	-	-	10	2.59	10400	5.26	2.95	10530	5.37
6	2.9	3.3	7	3.9	80	(9)	2.91	13100	6.63			
-		-	-	-	-	8	3.26	16500	8.37	3.37	16625	8.48

Protection against manual contact

The design of the insulating moulds provides that voltage carrying parts are contained inside the mould after termination of a wire with nominal cross section. This ensures adequate protection against accidental contact by the test finger according to EN 60529.

Exceptions are terminal blocks RT015xxHDWC, RP015xxWBWC, RT015xxHDWU, RT016xxHBWU, RT015xxVDWC, RT034xxHBLC and single terminal blocks.

It is required that live components are protected against accidental contact by fingers within a protection area with a 30 mm radius. This means that hazardous parts of an electric device cannot be touched by the straight test finger according to EN 60529.

Insulation moulds

The insulation moulds are made of Polyamide. This material is self-extinguishing according to UL 94V-0, flexible and unbreakable up to -40°C. Its stability under continuous temperature is rated up to 125° C, and up to 185° C for short periods. The melting point is situated between 215° C and 295° C depending on the material type (PA 4.6, 6, 6.6).

It is highly weatherproof due to special ultra-violet stabilisation and highly resistant to micro-organisms, bacteria, fungi, enzymes and termites. Both features provide good stability under tropical conditions.

The material is not resistant to strong acids with concentrations over 90 % such as formic acid or to phenol or superheated steam.

Test finger arrangement

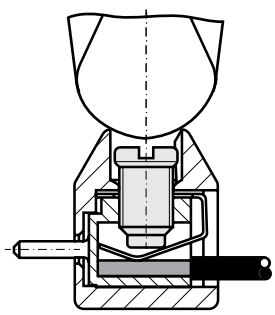

Testing is done with a terminated conductor of nominal cross section.

Approvals

Our current approvals are shown in the product summary, the type and approval index and for each product throughout the catalog.

UL (Canada) (USA)

UL (USA)

SEV (Switzerland)

CSA (Canada)

Note to technical data

Values according to UL (USA)

V / A / AWG 300 / 20 / 22 - 12

Values according to CSA (Canada)

V / A / AWG 300 / 20 / 22 - 12

Voltage V
Current A
American Wire Gauge AWG

Values according to SEV (Switzerland) / EN 60998

0.08 - 2.5 mm² 250 V / 4 kV / 16 A

Rated cross section in mm²
Rated voltage in V
Rated test voltage in kV
Rated current in A

Our termination products are approved by SEV and controlled according to the CCA-NTR procedure.

SEV means:	Schweizer Elektrotechnischer Verein (Electrotechnical Association of Switzerland) it is now called Electrosuisse
CCA means:	CENELEC Certification Agreement (including factory inspections / process and product inspection)
NTR means:	National Test Report
CENELEC means:	European committee for electrotechnical standardization
UL means:	Underwriters Laboratories Inc.
CSA means:	Canadian Standards Association

Applied test standards:

DIN EN 60998-2-1
Particular requirements for connecting devices as separate entities with screw-type clamping units

DIN EN 60998-2-2
Particular requirements for connecting devices as separate entities with screwless-type clamping units

DIN EN 60998-2-3
Particular requirements for connecting devices as separate entities with insulation-piercing clamping units

DIN EN 60999-1
Connecting devices - Electrical copper conductors - Safety requirements for screw-type and screwless-type clamping units

DIN EN 61984
Connectors - Safety requirements and tests

UL 1059
Standard for Safety; Terminal Blocks

UL 486E
Standard for Equipment Wiring Terminals for Use with Aluminum and/or Copper Conductors

UL 1977
Standard for Safety; Component Connectors for Use in Data, Signal, Control and Power Applications

CSA C22.2 No. 158
Standard for Terminal Blocks

European agencies for testing and approvals

The following table gives a summary of the European agencies for testing and approvals that have joined one or several of the programs for mutual acceptance of test results and approvals.

	Agency	Acceptance of test results	
	NCB	CB	CCA
		IEC standards	EN standards harmonisation documents
European Union			
Belgium	CEBEC	X	X
Germany	- VDE-PZI	X	X
	- TÜV-Rheinland	X	
	- TÜV-PS	X	
Denmark	DEMKO	X	X
Finland	FIMKO	X	X
France	LCIE	X	X
Greece	ELOT	X	X
Great Britain	- ASTA	X	X
	- BEAB	X	X
	- BASEC	X	X
	- BSI	X	X
Ireland	NSAI	X	X
Italy	IMQ	X	X
Luxemburg	SEE		X
Netherlands	KEMA	X	X
Austria	ÖVE	X	X
Portugal	IPQ		X
Sweden	SEMKO	X	X
Spain	AENOR	X	X

	Agency	Acceptance of test results	
	NCB	CB	CCA
		IEC standards	EN standards harmonisation documents
EFTA countries			
Iceland	RER		X
Norway	SEMKO	X	X
Switzerland	SEV	X	X
other countries			
Poland	PCBC	X	
Slovakia	EVPU	X	X
Slovenia	SIQ	X	X
Czechia	EZU	X	X
Russia	GOST-R	X	
Ukraine	Der Standart	X	

Explanations:

IEC: International Electrotechnical Commission

NCB: National Certification Body - IEC - accredited national test and approval agency

CB: participation in the CB procedure: acceptance of test results based on IEC standards

CCA: participation in the CCA procedure: acceptance of test results based on European Standards (EN) and documents for harmonisation (HD)

Notes

Index

Notes

A powerful team!

Always there for you!

The success of METZ CONNECT is based on competence and the commitment of their worldwide active personnel. Out of their knowledge, qualification and experience that they contribute in the different areas result the successful, reliable and high-quality solutions for your networks.
In our sales teams work excellent professionals with profound knowledge of the different product ranges, technologies and markets. They do not want to be just sales people but your contact and consultant to work out together with you the ideal solution for your networks.
Your demands mean challenge to us and to offer you the matching solution will be the confirmation for our work.

So just put the rules to the test – give us a challenge!

METZ CONNECT worldwide

SALES OFFICES

METZ CONNECT USA Inc.
200 Tornillo Way
Tinton Falls, NJ 07712
USA
Phone +1 732 389 1300
Fax +1 732 389 9066
www.metz-connect.com

METZ CONNECT France SAS
28, Rue Schweighaeuser
67000 Strasbourg
France
Phone +33 3 886 170 73
Fax +33 3 886 194 73
www.metz-connect.com

METZ CONNECT GmbH
Im Tal 2
78176 Blumberg
Germany
Phone +49 7702 533-0
Fax +49 7702 533-189
www.metz-connect.com

METZ CONNECT Zhongshan Ltd.
Ping Chang Road
Ping Pu Industrial Park
Sanxiang Town
Zhongshan City, 528463
Guangdong Province
China
Phone +86 760 86365 055
Fax +86 760 86365 050
www.metz-connect.com

METZ CONNECT Asia Pacific Limited
Suite 1803, 18/F,
Chinachem
Hollywood Centre
1 Hollywood Road
Central
Hong Kong
Phone +852 26 027 300
Fax +852 27 257 522
www.metz-connect.com

PRODUCTION SITES

METZ CONNECT TECH GmbH
Ottilienweg 9
78176 Blumberg
Germany
Phone +49 7702 533-0
Fax +49 7702 533-433
www.metz-connect.com

MC Termelő Kft.
Vásár tér 16/A
6090 Kunszentmiklós
Hungary
Phone +36 76 350524

METZ CONNECT Zhongshan Ltd.
Ping Chang Road
Ping Pu Industrial Park
Sanxiang Town
Zhongshan City, 528463
Guangdong Province
China

Phone +86 760 86365055
Fax +86 760 86365050
www.metz-connect.com

Contact

Contacts

You will find your responsible contacts for your sector in your region at our website:
http://www.metz-connect.com/en/contact-search

Please note

General Information

All the information, descriptions and illustrations given in this catalog are non-binding. It does in no way entitle to deduce warranty claims.

Subject to change without prior notice.

No liability accepted for printing errors.

METZ CONNECT GmbH is a member of the following organizations and associations.

METZ CONNECT USA Inc.

200 Tornillo Way
Tinton Falls, NJ 07712
USA

Phone +1-732-389-1300
Fax +1-732-389-9066

METZ CONNECT France SAS

28, Rue Schweighaeuser
67000 Strasbourg
France

Phone +33 3886 17073
Fax +33 3886 19473

METZ CONNECT Zhongshan Ltd.

Ping Chang Road
Ping Pu Industrial Park
Sanxiang Town
Zhongshan City, 528463
Guangdong Province
China

Phone +86 760 86365055
Fax +86 760 86365050

METZ CONNECT Asia Pacific Ltd.

Suite 1803, 18/F
Chinachem Hollywood Centre,
1 Hollywood Road, Central
Hong Kong

Phone +852 26 027 300
Fax +852 27 257522

METZ CONNECT GmbH
Im Tal 2
78176 Blumberg
Germany

Phone +49 7702 533-0
Fax +49 7702 533-189

info@metz-connect.com
www.metz-connect.com

799026-02 | 01/2015