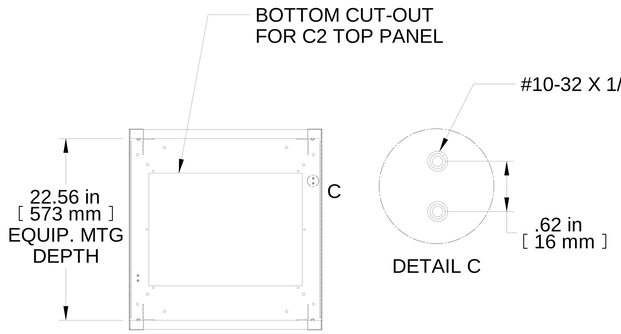

SECTION A-A

DETAIL C

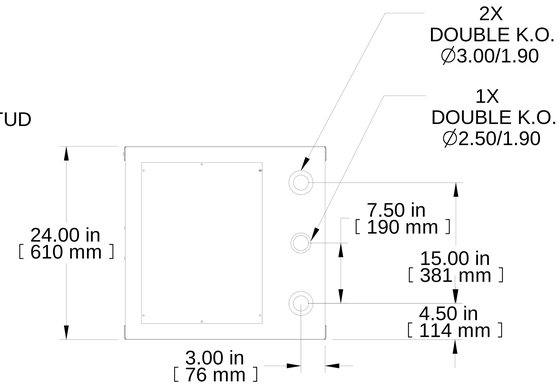

TOP VIEW

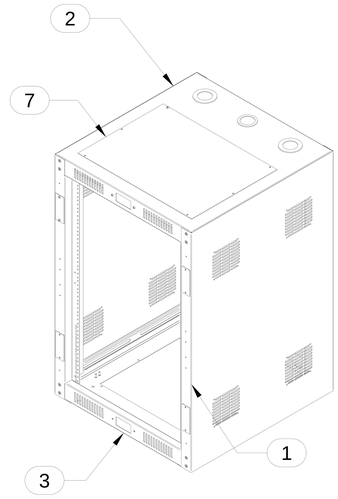

ISOMETRIC

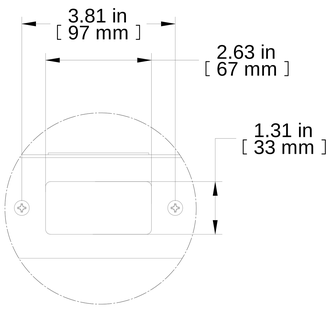

DETAIL B

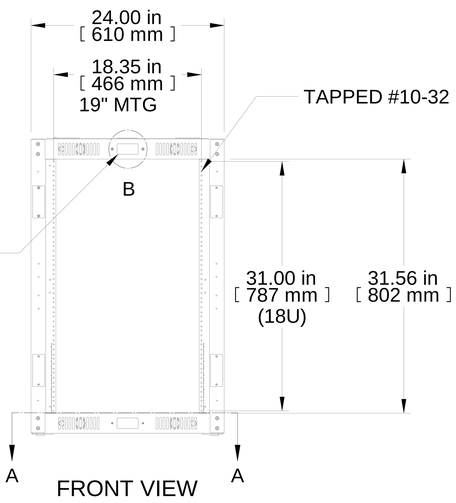

FRONT VIEW

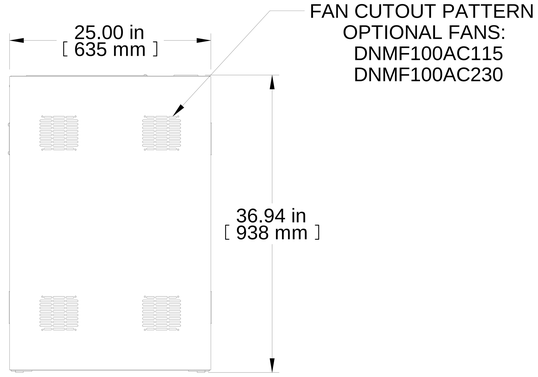

R.S. VIEW

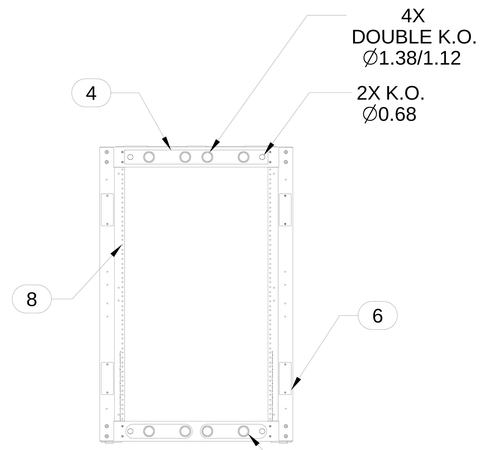

REAR VIEW

1U KO PANEL
(TOP/BOTTOM)

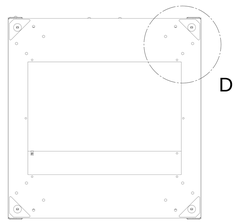

BOTTOM VIEW

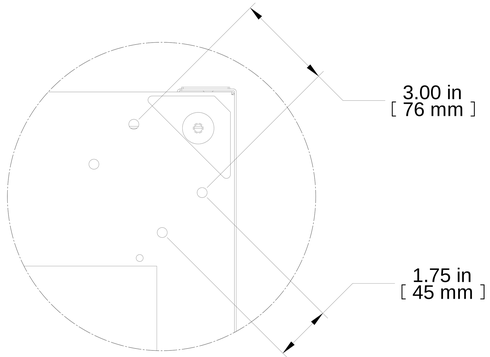

DETAIL D

Item Number	Title	Quantity
1	RCK - SIDE PANEL	2
2	RCK - TOP 25"D	1
3	RCK - BOT 25"D	1
4	RCK 1U KO PANEL	2
5	RECEPTACLE COVER PLATE	2
6	HINGE COVER PLATE	8
7	SOLID TOP (C2T1923S) CONT.II	1
8	H1 PANEL RAIL 18U LH	2

PART NUMBERS

RCK18U25BK	PAINTED BLACK TEXTURED

NOTES

Door Not Included

2 Sets of Mounting Rails

See Hammond Website for Additional Accessories

Français

Pour tous les détails sur nos produits,
svp veuillez consulter notre site www.hammondmfg.com

Data subject to change without notice. Isometric drawing not to scale.
Les données sont sujettes à changement sans préavis.

HAMMOND MANUFACTURING®

www.hammondmfg.com

PART NO. RCK18U25BK