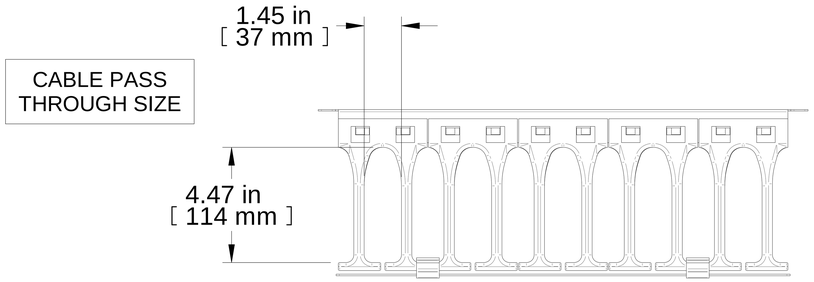

TOP VIEW

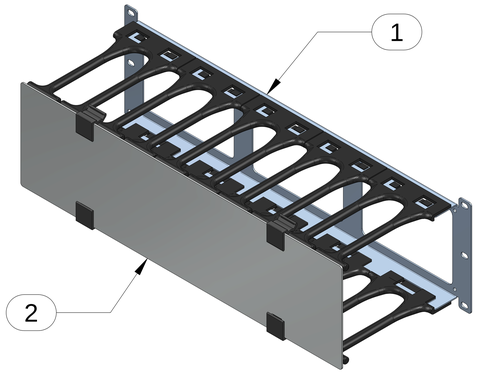

ISOMETRIC

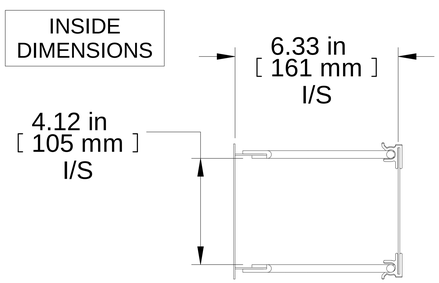

L.S. VIEW

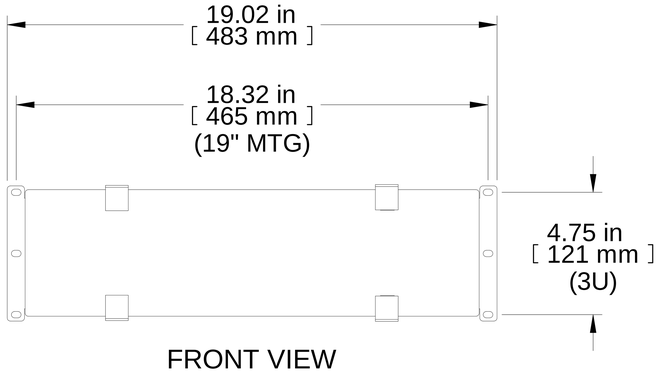

FRONT VIEW

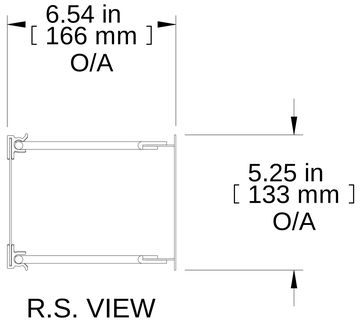

R.S. VIEW

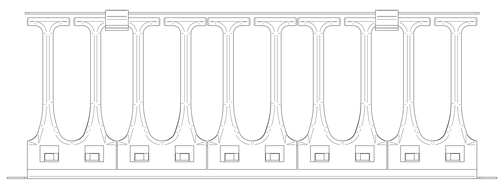

BOTTOM VIEW

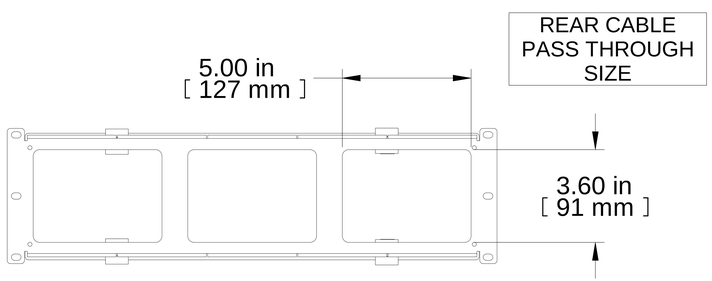

REAR VIEW

Item Number	Title	Quantity
1	HFMD 3U BACK PANEL	1
2	HFMD 3U COVER	1

PART NUMBERS	
RB-HFMD3	PAINTED BLACK TEXT.

NOTES

Ships Pre-Assembled
Mounting Hardware Not Included
See Hammond Website for More Information

Français

Pour tous les détails sur nos produits, svp veuillez consulter notre site www.hammondmfg.com

Data subject to change without notice. Isometric drawing not to scale.
Les données sont sujettes à changement sans préavis.

RACK BASICS®

www.hammondmfg.com

PART NO. **RB-HFMD3**