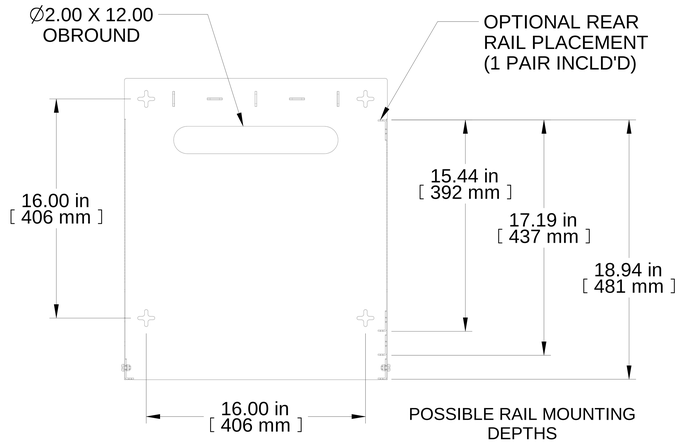

TOP VIEW
COVER REMOVED

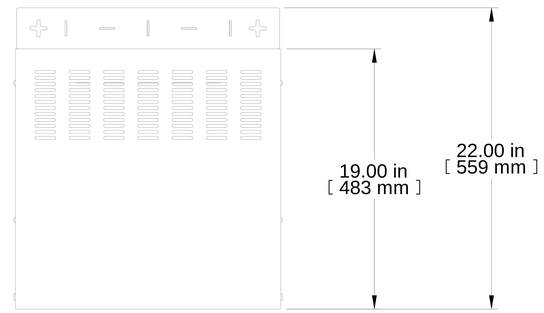

TOP VIEW

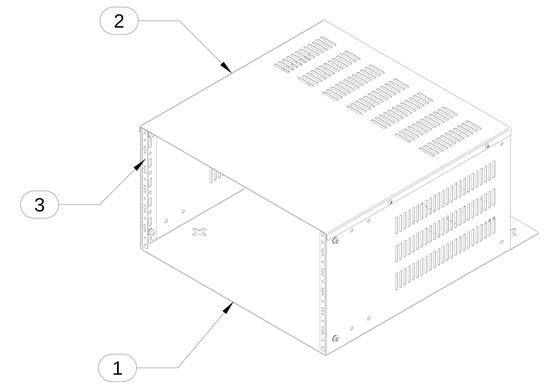

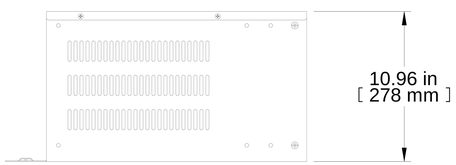

L.S. VIEW

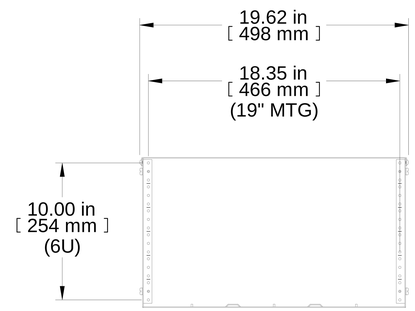

FRONT VIEW

R.S. VIEW

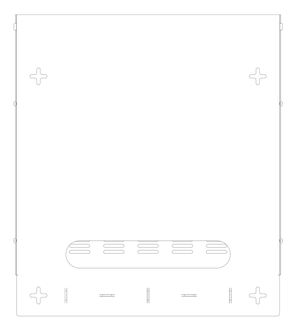

BOTTOM VIEW

Item Number	Title	Quantity
1	RB-CW6 BODY	1
2	RB-CW LID	1
3	URR RAIL	2

PART NUMBERS

RB-CW6	PAINTED TEXTURED BLACK

NOTES

1 X PAIR OF URR RAILS INCLUDED
1 X SCREW1032-10 INCLUDED
WALL MOUNTING HARDWARE NOT INCLUDED

Français

Pour tous les détails sur nos produits, svp veuillez consulter notre site www.hammondmfg.com

Data subject to change without notice. Isometric drawing not to scale.
Les données sont sujettes à changement sans préavis.

RACK BASICS®

www.hammondmfg.com

PART NO. **RB-CW6**