MC-35/37-MULTI-67-PVO-BK - Cable feed-through plates

1415241

https://www.phoenixcontact.com/pc/products/1415241

Please be informed that the data shown in this PDF document is generated from our online catalog. Please find the complete data in the user documentation. Our general terms of use for downloads are valid.

Cable feed-through plates, no. of conductors: 37, external cable diameter: 4x 6 mm ... 10 mm, 14x 8 mm ... 12 mm, 16x 10 mm ... 14 mm, 2x 12 mm ... 18 mm, 1x 17 mm ... 32 mm, material: galvanized sheet steel (Core), material: TPE-SEBS (external material), color: black, length: 222 mm, width: 92 mm, height: 29.5 mm

Your advantages

- Oil-resistant according to UL 157

Commercial data

Item number	1415241
Packing unit	1 pc
Minimum order quantity	1 pc
Product key	BF7CAX
Catalog page	Page 683 (C-2-2019)
GTIN	4055626039459
Weight per piece (including packing)	308.5 g
Weight per piece (excluding packing)	245 g
Customs tariff number	39269097
Country of origin	FI

MC-35/37-MULTI-67-PVO-BK - Cable feed-through plates

1415241

https://www.phoenixcontact.com/pc/products/1415241

Technical data

Notes

General	incl. mounting screws
General	2 mm thick coated, galvanized sheet steel

Product properties

Product type	Cable feed-through
No. of conductors	37

Dimensions

Dimensional drawing	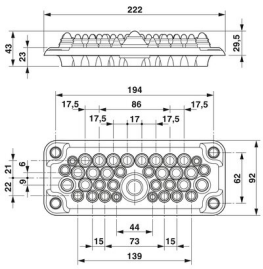
Width	92 mm
Height	29.5 mm
Length	222 mm
Drill hole distance, horizontal	62 mm
Drill hole distance, vertical	194 mm
Hole diameter	8.5 mm

Material specifications

Material	galvanized sheet steel
	TPE-SEBS
Flammability rating according to UL 94	V0

Cable/line

External cable diameter (6-10 mm)	4x 6 mm ... 10 mm
External cable diameter (8-12 mm)	14x 8 mm ... 12 mm
External cable diameter (10-14 mm)	16x 10 mm ... 14 mm
External cable diameter (12-18 mm)	2x 12 mm ... 18 mm
External cable diameter (17-32 mm)	1x 17 mm ... 32 mm

Environmental and real-life conditions

Ambient conditions

Degree of protection	IP66 (Minimum sheet thickness >= 2.5 mm)
	IP67 (Minimum sheet thickness >= 2.5 mm)
Ambient temperature (operation)	-40 °C ... 100 °C

Mounting

Assembly instructions	M8 mounting screw, torque: 1.5 - 2.0 Nm, SW5 Allen key
	The mounting screws included should be used for assembly. Assembly steps: 1) Fix Multigates with the mounting screws provided (observe torque) 2) Make a hole in the membrane (with a screwdriver) or cut off the tip of the cone 3) Guide the cable through the opening (from the outside). Withdraw the cable approximately 20 mm (to improve strain relief).

Drawings

Dimensional drawing

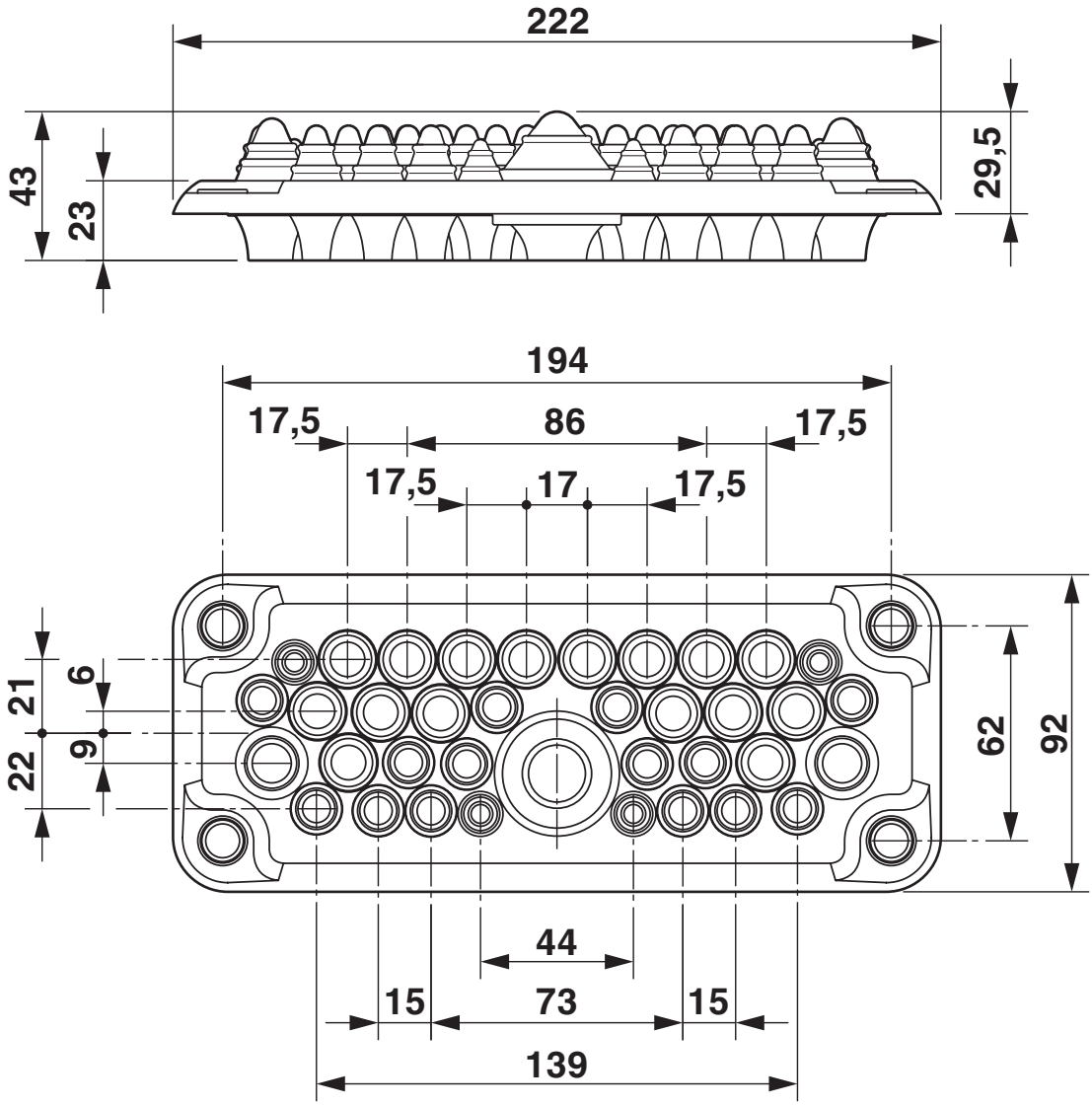

Dimensional drawing

Dimensional drawing

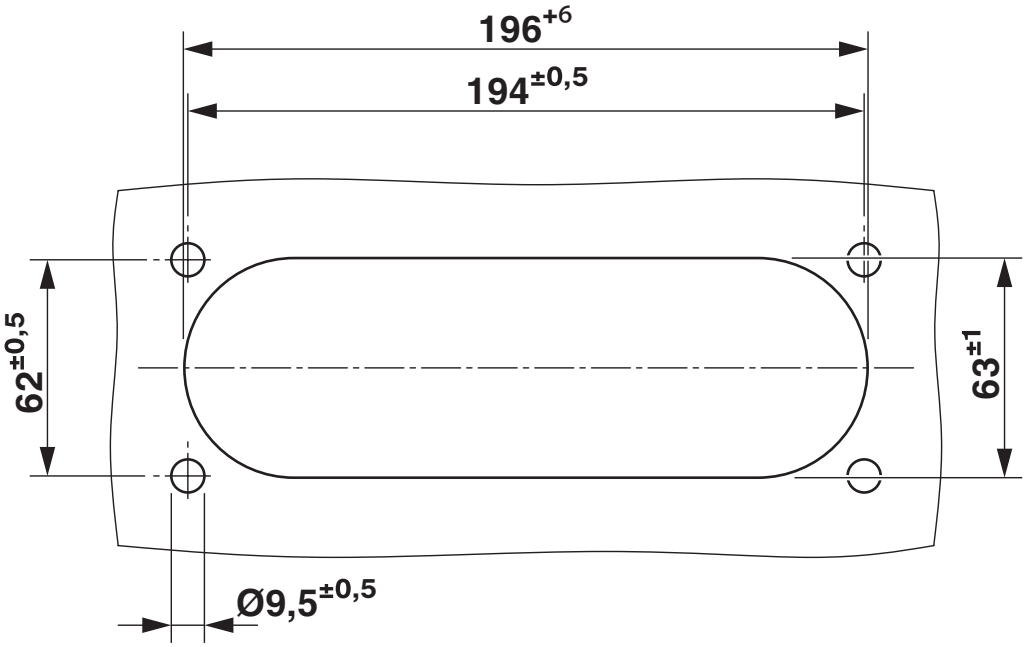

Wall cutout drawing

Approvals

To download certificates, visit the product detail page: https://www.phoenixcontact.com/pc/products/1415241

EAC-RoHS
Approval ID: RU D-DE.HB35.B.00387

Classifications

ECLASS

ECLASS-11.0	27400569
ECLASS-12.0	27400569
ECLASS-13.0	27400569

ETIM

ETIM 8.0	EC001004

UNSPSC

UNSPSC 21.0	31163000

Environmental product compliance

China RoHS	Environmentally friendly use period: unlimited = EFUP-e
	No hazardous substances above threshold values

Phoenix Contact 2023 © - all rights reserved
https://www.phoenixcontact.com

PHOENIX CONTACT GmbH & Co. KG
Flachsmarktstraße 8
D-32825 Blomberg
+49 (0) 5235-3 00
info@phoenixcontact.com