# FP 0,8/ 52-MV-SH 2,65 - SMD male connector, shielded

1043756

https://www.phoenixcontact.com/us/products/1043756

Please be informed that the data shown in this PDF document is generated from our online catalog. Please find the complete data in the user documentation. Our general terms of use for downloads are valid.

shielded SMD male connector, nominal current: 1.7 A, Test voltage: 500 V AC, number of positions: 52, pitch: 0.8 mm, color: black, contact surface: Gold, contact connection type: Pin, mounting: SMD soldering

## Your advantages

- Gold-plated contacts ensure transfer quality remains stable over the long term
- Reliable mechanical and electrical connections, thanks to the double-sided ScaleX contact system
- Robustness: ScaleX technology for high tolerance compensation and protection of contacts
- Flexible device design: various numbers of positions, designs, and stack heights with high wipe lengths

## Commercial data

| | |
|---|---|
| Item number | 1043756 |
| Packing unit | 1 pc |
| Minimum order quantity | 250 pc |
| Sales key | AA23 |
| Product key | AAWJDC |
| GTIN | 4055626614151 |
| Weight per piece (including packing) | 4.517 g |
| Weight per piece (excluding packing) | 3.897 g |
| Customs tariff number | 85366930 |
| Country of origin | CN |

# Technical data

## Product properties

| | |
|---|---|
| Product type | shielded SMD male connector |
| Product family | FP 0,8/...-MV-SH 2,65 |
| Number of positions | 52 |
| Pitch | 0.8 mm |
| Number of rows | 2 |
| Number of potentials | 52 |
| Pin layout | Linear pad geometry |
| Electrical characteristic | shielded |

## Electrical properties

| | |
|---|---|
| Nominal current $I_N$ | 1.7 A IEC 60512-5-2:2002-02 (at 20°C 80-pos.) |
| Degree of pollution | 3 |
| Contact resistance | 15 mΩ |
| Test voltage | 500 V AC IEC 60512-4-1:2003 |
| Electrical characteristic | shielded |

## Mounting

| | |
|---|---|
| Mounting type | SMD soldering |
| Pin layout | Linear pad geometry |

### Processing notes

| | |
|---|---|
| Process | Reflow soldering |
| Moisture Sensitive Level | MSL 1 |
| Classification temperature $T_c$ | 260 °C |

## Material specifications

### Material data - contact

| | |
|---|---|
| Note | WEEE/RoHS-compliant, free of whiskers according to IEC 60068-2-82/JEDEC JESD 201 |
| Contact material | Cu alloy |
| Surface characteristics | Selective coating |
| Metal surface contact area (top layer) | Gold (Au) |
| Metal surface contact area (middle layer) | Nickel (Ni) |
| Metal surface soldering area (top layer) | Tin (Sn) |
| Metal surface soldering area (middle layer) | Nickel (Ni) |

### Material data - housing

| | |
|---|---|
| Color (Housing) | black (9005) |
| Insulating material | LCP |
| Insulating material group | IIIb |
| CTI according to IEC 60112 | 150 |

| | |
|---|---|
| Flammability rating according to UL 94 | V0 |

## Notes

| | |
|---|---|
| Notes on operation | The permissible voltage during operation depends on the application, taking into consideration the air clearances and creepage distances within the scope of insulation requirements in accordance with IEC 60664-1. |
| Details for soldering processes | The items are suitable for assembly on both sides and for overhead soldering. |

## Dimensions

| | |
|---|---|
| Dimensional drawing | 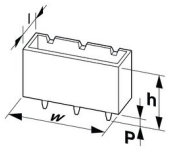 |
| Pitch | 0.8 mm |
| Width [w] | 24.7 mm |
| Height [h] | 7.15 mm |
| Length [l] | 6.1 mm |
| Installed height | 6.55 mm |

### Application

| | |
|---|---|
| Contact cover | 0.8 mm |
| Center offset | ± 0.7 mm in longitudinal and transverse direction |
| Stack height | 7.5 mm Tolerance: +1,5 mm (in combination with Range of articles:FP 0,8/...-FV-SH 4,85) |
| | 10.5 mm Tolerance: +1,5 mm (in combination with Range of articles:FP 0,8/...-FV-SH 7,85) |
| | 13.5 mm Tolerance: +1,5 mm (in combination with Range of articles:FP 0,8/...-FV-SH 10,85) |
| Wipe length | 1.5 mm |
| Angular tolerance | ± 5 ° in longitudinal and transverse direction (when plugging in) |
| | ± 5 ° in longitudinal and transverse direction (when plugged in) |
| Axial offset in X direction (longitudinal) | ± 0.3 mm (Tolerance compensation when plugged in) |
| Axial offset in Y direction (transversal) | ± 0.3 mm (Tolerance compensation when plugged in) |

### PCB design

| | |
|---|---|
| Pad geometry | 0.5 x 1.1 mm |

## Electrical tests

### Thermal test | Test group C

| | |
|---|---|
| Specification | IEC 60512-5-2:2002-02 |
| Tested number of positions | 80 |

### Insulation resistance

| | |
|---|---|
| Specification | IEC 60512-3-1:2002-02 |

| | |
|---|---|
| Insulation resistance, neighboring positions | ≥ 5 GΩ |

Air clearances and creepage distances |

| | |
|---|---|
| Insulating material group | IIIb |
| Minimum value for clearance and creepage distance | 0.25 mm |

## Environmental and real-life conditions

Vibration test

| | |
|---|---|
| Specification | IEC 60068-2-6:2007-12 |
| Frequency | 10 - 2000 - 10 Hz |
| Sweep speed | 1 octave/min |
| Amplitude | 1.5 mm (10 Hz ... 60.1 Hz) |
| Sweep speed | 200 m/s² (58 Hz ... 2000 Hz) |
| Test duration per axis | 2.5 h |

Durability test

| | |
|---|---|
| Specification | IEC 60512-9-1:2010-03 (following) |
| Impulse withstand voltage at sea level | 0.8 kV |
| Contact resistance $R_1$ | 15 mΩ |
| Contact resistance $R_2$ | 15 mΩ |
| Insertion/withdrawal cycles | 500 |
| Insulation resistance, neighboring positions | ≥ 5 GΩ |

Climatic test

| | |
|---|---|
| Specification | IEC 60512-11-7:2003-05 |
| Corrosive stress | Method 1, 10 days |
| Power-frequency withstand voltage | 500 V AC |

Shocks

| | |
|---|---|
| Specification | IEC 60068-2-27:2008-02 |
| Pulse shape | Semi-sinusoidal |
| Acceleration | 490 m/s² |
| Shock duration | 11 ms |
| Test directions | X-, Y- and Z-axis (pos. and neg.) |

Ambient conditions

| | |
|---|---|
| Ambient temperature (operation) | -55 °C ... 125 °C |
| Ambient temperature (storage/transport) | -40 °C ... 70 °C |
| Relative humidity (storage/transport) | 30 % ... 70 % |
| Ambient temperature (assembly) | -5 °C ... 100 °C |

## Packaging specifications

# FP 0,8/ 52-MV-SH 2,65 - SMD male connector, shielded

1043756

https://www.phoenixcontact.com/us/products/1043756

| | |
|---|---|
| Dimensional drawing | 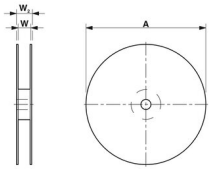 |
| Type of packaging | 44 mm wide tape |
| [W] tape width | 44.4 mm |
| [W2] coil overall dimension | 50.4 mm |
| [A] coil diameter | 330 mm |
| Outer packaging type | Transparent-Bag |
| ESD level | (D) electrostatically conductive |
| Specification | DIN EN 61340-5-1 (VDE 0300-5-1): 2008-07 |

## Drawings

Schematic diagram

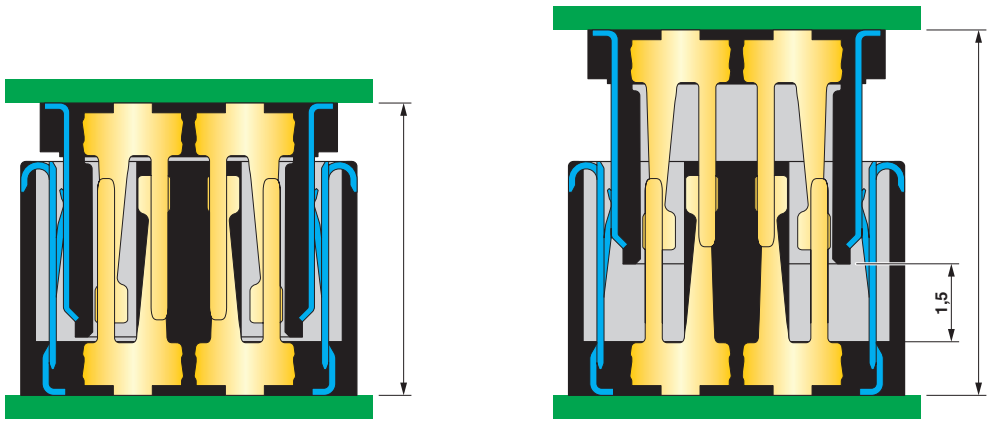


Diagram

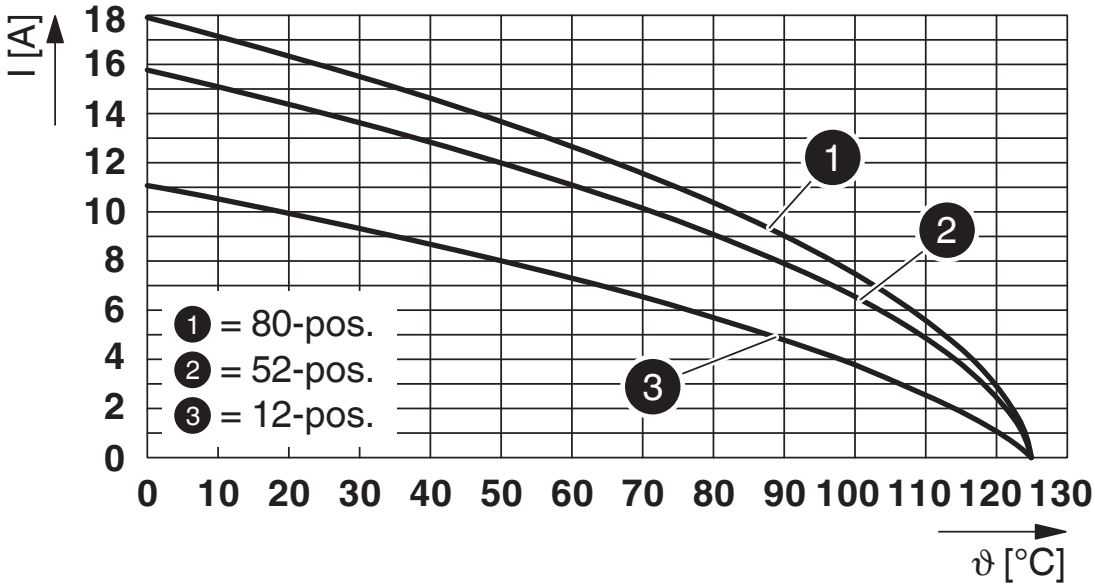


Type: FP 0,8/...-MV-SH 2,65 with FP 0,8/...-FV-SH 7,85 – shield current carrying capacity

Diagram

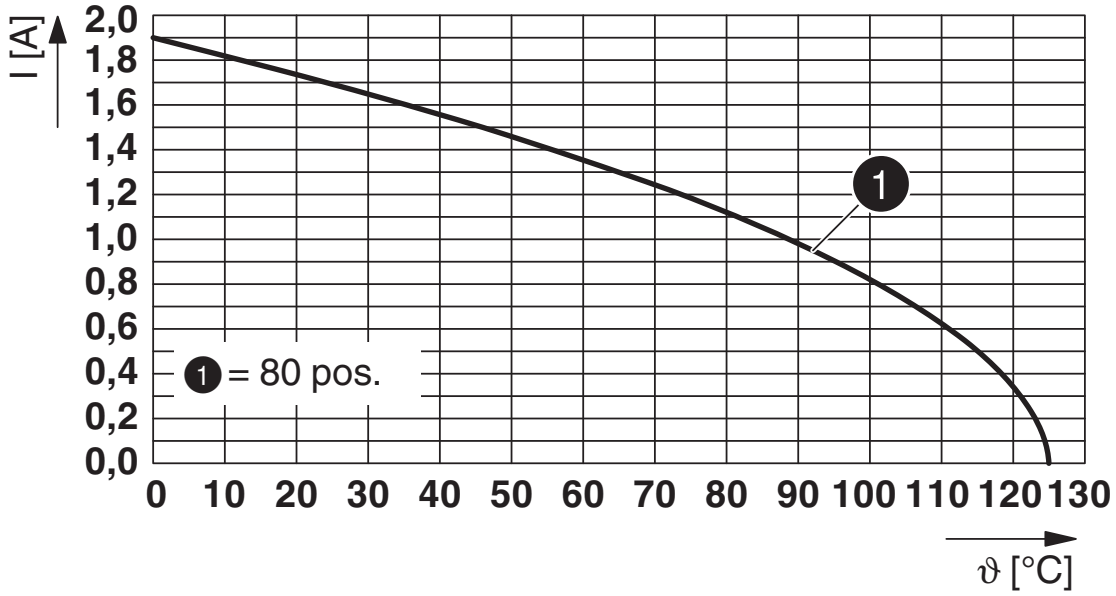


Type: FP 0,8/...-MV-SH 2,65 with FP 0,8/...-FV-SH 7,85

Diagram

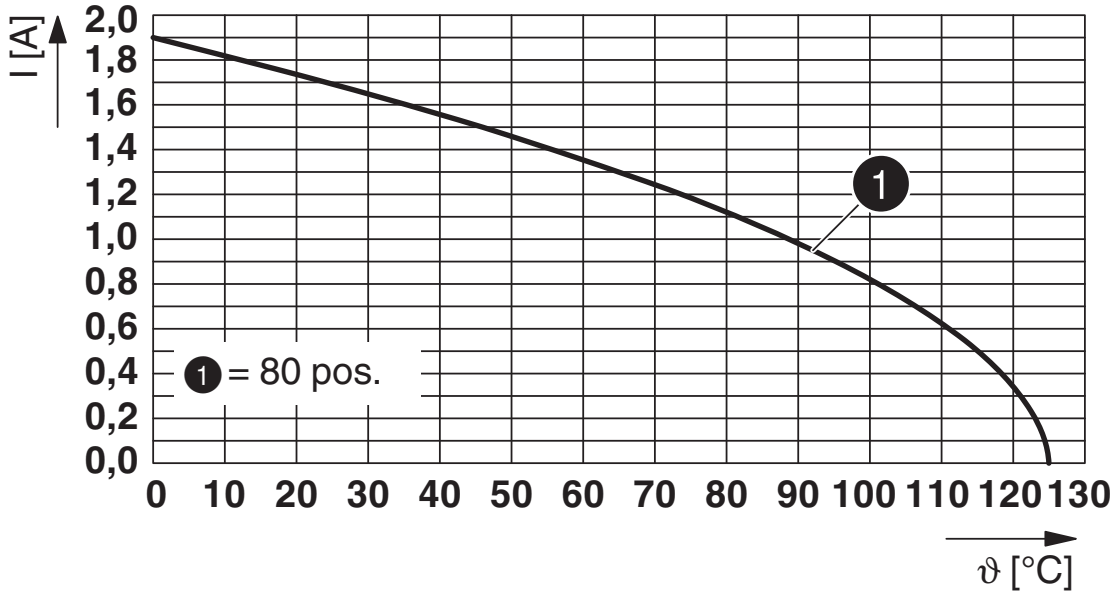


Type: FP 0,8/...-MV-SH 2,65 with FP 0,8/...-FV-SH 4,85

## Approvals

To download certificates, visit the product detail page: https://www.phoenixcontact.com/us/products/1043756

**EAC**
Approval ID: B.00511/19

**cULus Recognized**
Approval ID: E118976-20190703

## Classifications

### ECLASS

| | |
|---|---|
| ECLASS-11.0 | 27460201 |
| ECLASS-12.0 | 27460201 |
| ECLASS-13.0 | 27460201 |

### ETIM

| | |
|---|---|
| ETIM 8.0 | EC002637 |

### UNSPSC

| | |
|---|---|
| UNSPSC 21.0 | 39121400 |

## Environmental product compliance

| | |
|---|---|
| China RoHS | Environmentally friendly use period: unlimited = EFUP-e |
| | No hazardous substances above threshold values |

# FP 0,8/ 52-MV-SH 2,65 - SMD male connector, shielded

1043756

https://www.phoenixcontact.com/us/products/1043756

## Mandatory accessories

### FP 0,8/ 52-FH-SH - SMD female connector shielded

1043724

https://www.phoenixcontact.com/us/products/1043724

Shielded SMD female connector, nominal current: 1.7 A, Test voltage: 500 V AC, number of positions: 52, pitch: 0.8 mm, color: black, contact surface: Gold, contact connection type: Socket, mounting: SMD soldering

### FP 0,8/ 52-FV-SH 10,85 - SMD female connectors

1154034

https://www.phoenixcontact.com/us/products/1154034

Shielded SMD female connector, nominal current: 1.7 A, Test voltage: 500 V AC, number of positions: 52, pitch: 0.8 mm, color: black, contact surface: Gold, contact connection type: Socket, mounting: SMD soldering

# FP 0,8/ 52-MV-SH 2,65 - SMD male connector, shielded

1043756

https://www.phoenixcontact.com/us/products/1043756

## FP 0,8/ 52-FV-SH 4,85 - SMD female connector shielded

1043713

https://www.phoenixcontact.com/us/products/1043713

Shielded SMD female connector, nominal current: 1.7 A, Test voltage: 500 V AC, number of positions: 52, pitch: 0.8 mm, color: black, contact surface: Gold, contact connection type: Socket, mounting: SMD soldering

## FP 0,8/ 52-FV-SH 7,85 - SMD female connector shielded

1043684

https://www.phoenixcontact.com/us/products/1043684

Shielded SMD female connector, nominal current: 1.7 A, Test voltage: 500 V AC, number of positions: 52, pitch: 0.8 mm, color: black, contact surface: Gold, contact connection type: Socket, mounting: SMD soldering

## Accessories

# FP 0,8/ 52-MV-SH 2,65 - SMD male connector, shielded

1043756

https://www.phoenixcontact.com/us/products/1043756

## FP 0,8/ 52-FV-SH 4,85 - SMD female connector shielded

1043713

https://www.phoenixcontact.com/us/products/1043713

Shielded SMD female connector, nominal current: 1.7 A, Test voltage: 500 V AC, number of positions: 52, pitch: 0.8 mm, color: black, contact surface: Gold, contact connection type: Socket, mounting: SMD soldering

Phoenix Contact 2023 © - all rights reserved
https://www.phoenixcontact.com

Phoenix Contact USA
586 Fulling Mill Road
Middletown, PA 17057, United States
(+717) 944-1300
info@phoenixcon.com