LPT15P series

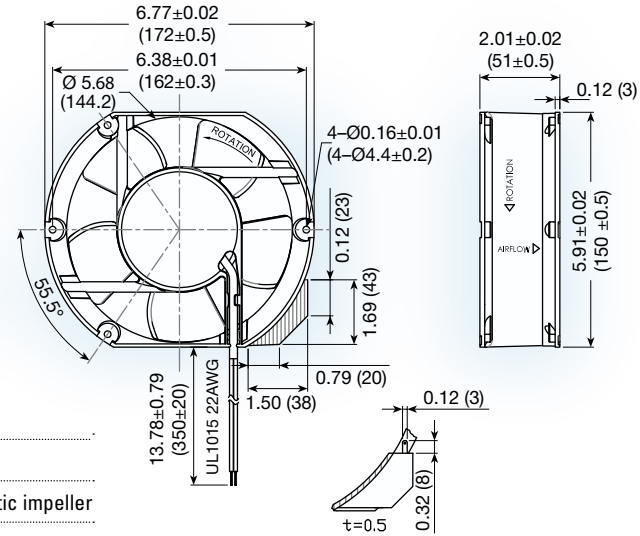

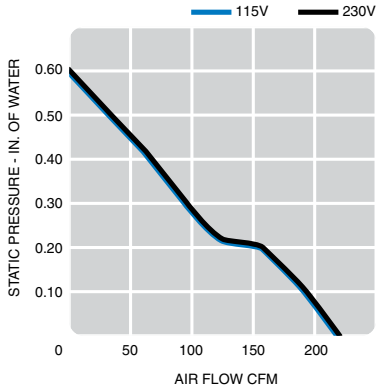

(172 x 150 x 51 mm)

6.77 x 5.91 x 2.00 inches

Operating voltage:	115 or 230 VAC
Construction:	metal frame and plastic impeller
Bearing option:	ball bearing
Motor:	electronically commutated
Air flow:	exhaust over struts
Connection:	lead wire UL1007 22AWG or terminal
Protection:	auto restart
Options:	• encapsulated motor (IP68) • ATEX

Model No.	Rated Voltage	Freq.	Input Power	Rated Cur.	Speed	Air Volume		Max. Sta tic Pressure (H_2O)		Sound Noise	Wt.
	V	HZ	W	A	RPM	M^3/Min.	CFM	MM	INCH	dbA	g
LPT15P12	100-130	50/60	15	0.23	3,000	6.16	220	15.7	0.62	57	700
LPT15P23	210-240	50/60	15	0.13	3,000	6.16	220	15.7	0.62	57	700