2D Drawing	IGES	STEP	3D PDF
Solder Profile	CofC RoHS Compliant	CofC REACH Compliant	UL Plastic File
Certificate of Origin	Check Stock	Request a Sample	Send Us An Email

Generated Part Number

KLDLX-P-202-A-M8

Part Number Builder

KLDLX-P	–	0202	–	A	–	M8	–	
Series		Product Type		Diameter		Barrel Thread		Barrel Length

Series
KLDLX-P - Locking DC Power Plug
Product Type
0202 - 2mm options

Diameter
A - 2.0mm Center Pin Diameter
B - 2.5mm Center Pin Diameter
Barrel Thread
M8 - M8 thread

Barrel length
Blank - 5.7mm barrel length
LB - 8.0mm barrel length (Contact Kycon for more Information)

Contact Kycon For Other Options

DC POWER CONNECTORS: KLDLX-P Series

Locking DC Power Plug

Product Features

2.0mm and 2.5mm Pin Options
Locking ring
Solder Eyelets
Locks when used with the KLDLX & KLDPLX Series

Performance Specifications

Materials and Finish
Barrel: Brass, Nickel Plated
Coupling Ring: Brass, Nickel Plated
Insulator: PBT
Rear Cover: ABS

Electrical Characteristics

Insulation Resistance:
100 Megohms Min. at 500V DC
Contact Resistance
30 milliohms Max.
Dielectric Withstanding Voltage:
500V for 1 Minute
Rated Current: 5A
Rated Voltage: 24V DC
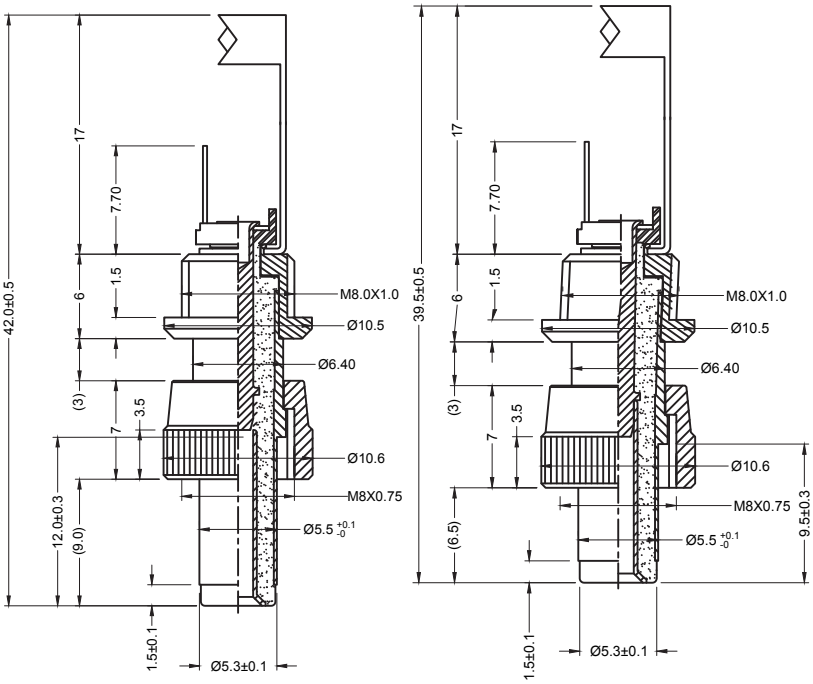
KLDLX-P Series