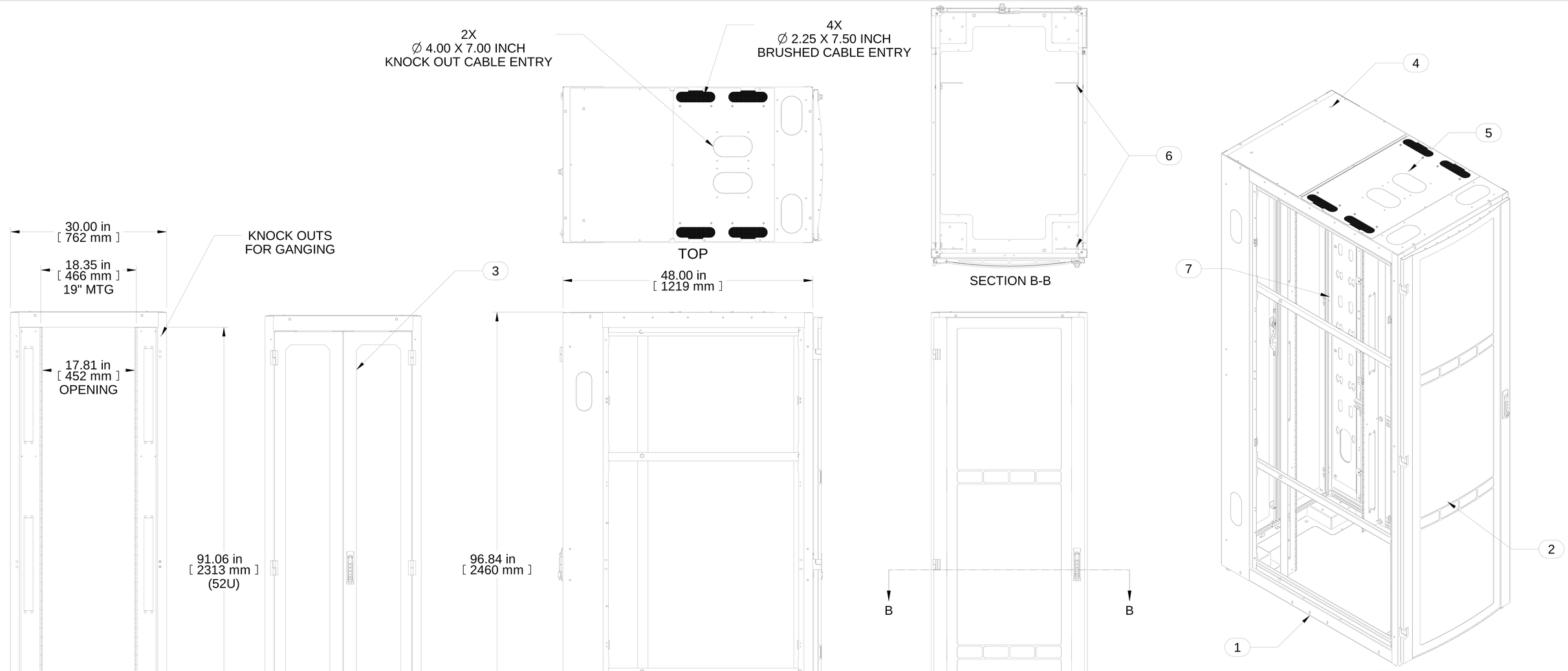

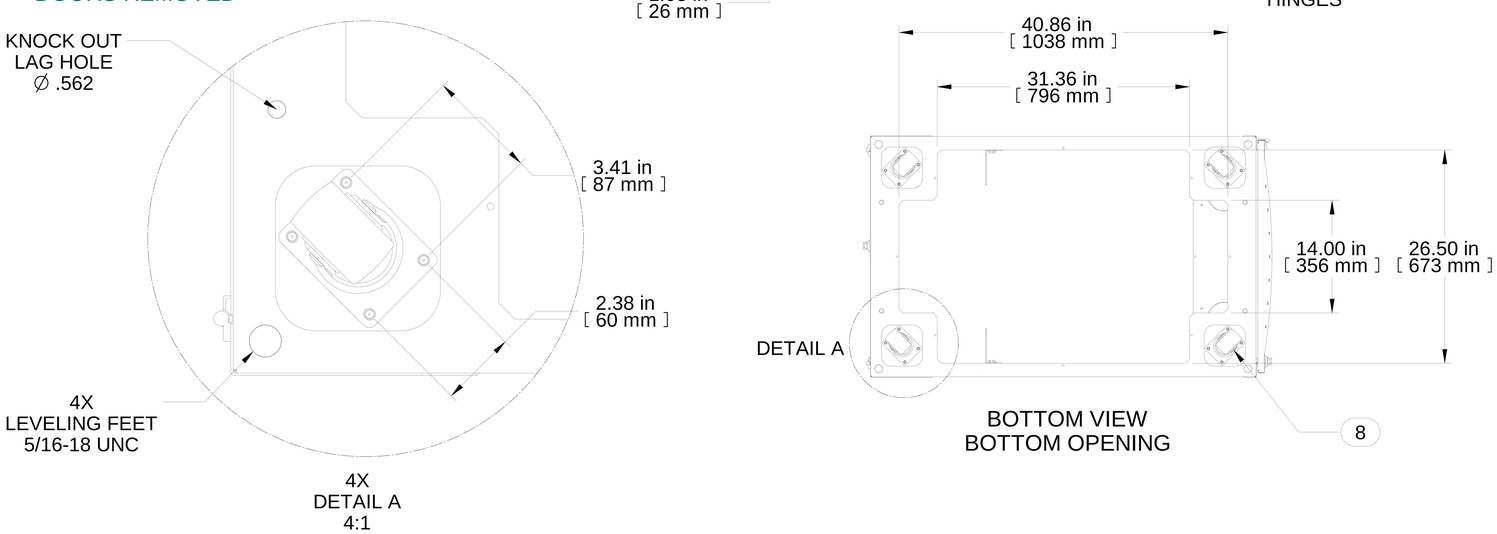

Item Number	Title	Quantity
1	H1 - FRAME (30WX52UX48D)	1
2	H1 - CURVED DOOR VENTED (30WX52U)	1
3	H1 - SPLIT DOORS VENTED (30WX52U)	1
4	TOP PANEL - SOLID	1
5	TOP PANEL - BRUSHED CABLE ENTRY	1
6	H1 PANEL RAIL SQ HOLE (PAIR)	2
7	PDU MTG BRKT	1
8	HEAVY DUTY SWIVEL CASTER	4

PART NUMBERS

H13052U48WH	PAINTED WHITE TEXTURE

50 Pack of mounting hardware included
See Hammond Website for Additional Accessories

Français

Pour tous les détails sur nos produits, svp veuillez consulter notre site www.hammondmfg.com

Data subject to change without notice. Isometric drawing not to scale.
Les données sont sujettes à changement sans préavis.

HAMMOND MANUFACTURING®

www.hammondmfg.com

PART NO. **H13052U48WH**