GlobalTech Display

A Professional LCD Displays Provider

TFT LCD Display Specification

PN: GLT035320240IS1

Overview:

- 3.5” Diagonal
- IPS, Full View Angle
- Driver: ST7272A
- 16.7M Colors
- 1000 Nits
- 320 x 240 Pixels
- Transmissive/Normally Black
- RGB-24bit Interface
- No Touch Panel
- RoHS Compliant

9825 Widmer Road, Lenexa, KS 66215, USA | Tel: 913-828-5685 Fax: 913-273-4397

Email: sales@gtdisplays.com Website: www.gtdisplays.com

Table of Contents

1. Record of Revision

Rev	Issued Date	Description	Editor
1.0	11/16/2020	First Release	ZWF
2.0	7/15/2021	Update the PIN interface definition	ZWF

2. General Specifications

Feature		Spec
Characteristics	Size	3.5 inch
	Resolution	320(horizontal) x 240(Vertical)
	Interface	RGB-24bit
	Connect type	Connector
	Display Colors	16.7M
	Pixel pitch (mm)	0.219 x 0.219
	Pixel Configuration	RGB Stripe
	Display Mode	Normally black
	LCD Driver IC	ST7272A
	Viewing Direction	Full view
Mechanical	LCM (W x H x D) (mm)	76.90 x 63.90 x 4.89
	Active Area(mm)	70.08 x 52.56
	With or without TSP	No
	Weight (g)	~30g
	LED Numbers	9 LEDS

Note 1: Requirements on Environmental Protection: RoHs
Note 2: LCM weight tolerance: +/- 5%

3. Input / Output Terminals

No.	Symbol	Description
1-2	VBL-	Backlight LED Cathode
3-4	VBL+	Backlight LED Anode.
5	Y1(NC)	Touch panel up side（NC）
6	X1(NC)	Touch panel right side（NC）
7	NC	-
8	RESET	Reset Signal pin (“Low” is enable)
9	SPENB	Chip select
10	SPCK	Serial Clock.
11	SPDA	Serial Data
12-19	B0~B7	Data bus
20-27	G0~G7	Data bus
28-35	R0~R7	Data bus
36	HSYNC	Line Synchronous Signal
37	VSYNC	Frame Synchronous Signal
38	DOTCLK	Dot-clock signal and oscillator source
39-40	NC	-
41-42	VDD	Power supply for logic operation
43	Y2(NC)	Touch panel bottom side（NC）
44	X2(NC)	Touch panel left side（NC）
45-47	NC	-
48	IF2（NC）	Control the input data format（NC）
49	IF1（NC）	Control the input data format（NC）
50	IF0（NC）	Control the input data format（NC）
51	NC	-
52	DEN	Display enable signal
53-54	GND	System Ground

4. Absolute Maximum Rating

Item	Symbol	MIN	Typ	MAX	Unit	Remark
Supply Voltage	V_{DD}	-0.5	-	5.0	V	-
Operating Temperature	T_{OPR}	-20	-	70	℃	-
Storage Temperature	T_{STG}	-30	-	80	℃	

5. Timing characteristics

5.1 Electrical Characteristics

Item		Symbol	MIN	TYP	MAX	Unit	Remark
Supply Voltage		V_{cc}	3.0	3.3	3.6	V	
		IOVCC	1.65	3.0	3.3		
Input Signal Voltage	Low Leve	V_{IL}	GND	-	0.1x VDD	V	
	High Level	V_{IH}	0.8x VDD	-	VDD	V	
Output Signal Voltage	Low Leve	V_{OL}	0	-	0.2*VDD	V	
	High Level	V_{OH}	0.8*VDD	-	VDD	V	

5.2 LED Driving Conditions

Item	Symbol	MIN	TYP	MAX	Unit	Remark
Forward Current	I_F	-	60	-	mA	
Forward Voltage	V_F	9.0	9.6	10.2	V	
Backlight Power consumption	W_{BL}	-	0.576	-	W	
LED Lifetime		25,000	50,000	-	Hrs	

Note 1: Each LED: IF =20 mA, VF =3.2+/-0.2V.
Note 2: Optical performance should be evaluated at Ta=25℃ only.
Note 3: If LED is driven by high current, high ambient temperature & humidity condition. The life Time of LED will be reduced. Operating life means brightness goes down to 50% initial brightness. Typical operating life time is estimated data.

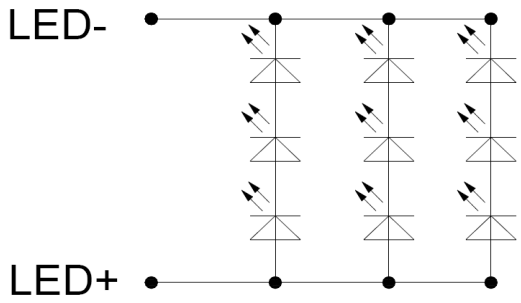

Figure: LED connection of backlight (Constant Current)

5.3 Block Diagram

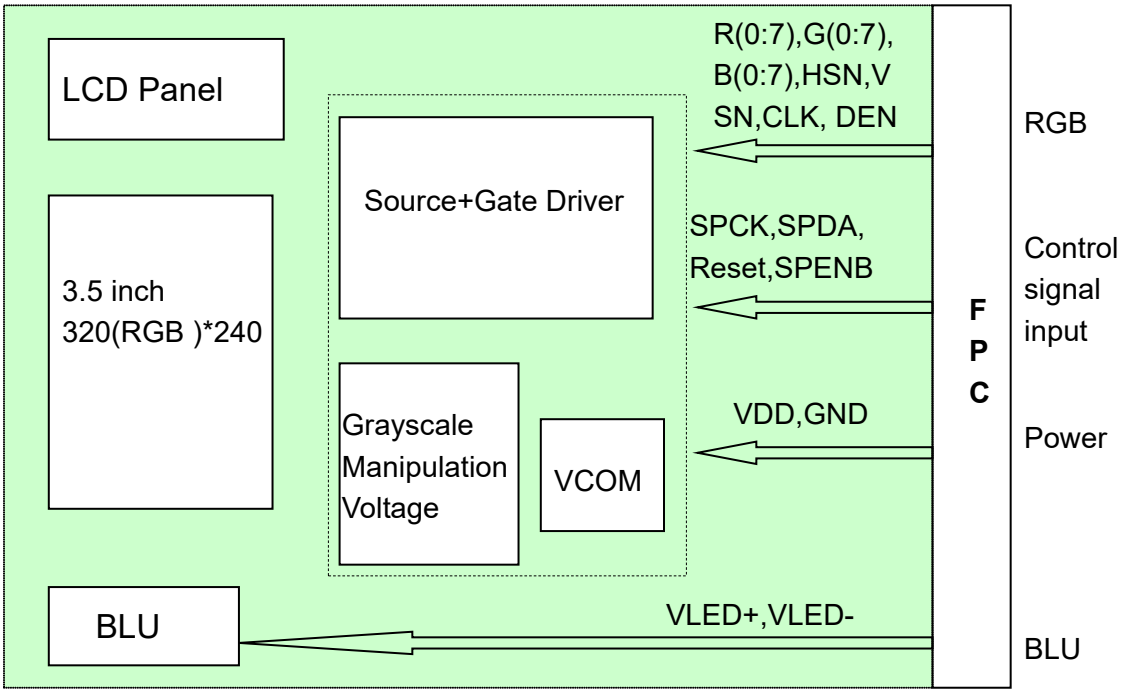

6. Interface Timing

6.1 AC Electrical Characteristics

Test Condition: (VDD=VDDP=3.3V, VDDA=5.0V, GND=GNDA=GNDP=0V, TA= 25℃)

Parameter	Symbol	Min.	Typ.	Max.	Unit	Conditions
System Operation Timing						
VDD power source slew time	T_{POR}			1000	us	From 0V to 90% VDD
RSTB active pulse width	T_{RSTB}	40			us	VDD = 3.3V
Input Output Timing						
CLKIN clock time	Tclk	33.3/125	-	-	ns	Please refer to timing table(p.32)
HSD to CLKIN	Thc	-	-	1	CLKIN	
HSD width	Thwh	1	-	-	CLKIN	
VSD width	Tvwh	1	-	-	Th	
HSD period time	Th	60	63.56	67	us	
VSD setup time	Tvst	8	-	-	ns	
VSD hold time	Tvhd	10	-	-	ns	
HSD setup time	Thst	8	-	-	ns	
HSD hold time	Thhd	10	-	-	ns	
Data set-up time	Tdsu	8	-	-	ns	DIN[23:0] to CLKIN
Data hold time	Tdhd	10	-	-	ns	DIN[23:0] to CLKIN
DEN setup time	Tesd	12	-		ns	DEN to CLKIN
Time that VSD to 1st line data input	Tvs	2	13	127	Th	@CCIR601 / 8bit RGB HV mode Control by HDLY[6:0] setting Tvs = HDLY[6:0]
Time that CCIR_V to 1st line data input	Tvs	12	20	28	Th	@CCIR656 NTSC mode Control by HDLY[6:0] setting Tvs = HDLY[6:0]
Time that CCIR_V to 1st line data input	Tvs 17 25 33 Th					@CCIR656 PAL mode Control by HDLY[6:0] setting Tvs = HDLY[6:0]
Time that VSD to 1st line data input	Tvs	2	13	127	Th	@24bit RGB HV mode Control by HDLY[6:0] setting Tvs = HDLY[6:0]
Source output stable time 1	Tst	-	25	30	us	96% final, CL=30pF, RL=2K
Gate output stable time	Tgst	-	500	1000	ns	96% final, CL=40pF
VCOMOUT output stable time	Tcst	-	4	8	us	96% final, CL=33nF, RL=100ohm
3-wire serial communication AC timing						
Serial clock	Tspck	320	-	-	ns	
SPCK pulse duty		40	50	60	%	Tckh / Tspck
Serial data setup time	Tisu	120	-	-	ns	
Serial data hold time	Tihd	120	-	-	ns	
Serial clock high/low	Tckh/l	120	-	-	ns	
Chip select distinguish	Tcd	1	-	-	us	
SPENB to VSD	Tcv	1	-	-	us	
SPENB input setup time	Teck	150	-	-	ns	
SPENB input hold time	Tcke	150	-	-	ns	

6.2 DC Electrical Characteristics

Recommended Operating Range

Item	Symbol	Min.	Typ.	Max.	Unit	Conditions
Supply Voltage	VDD	3.0	3.3	3.6	V	
IO Supply Voltage	VDDI	3.0	-	3.6	V	
Charge Pump Supply Voltage	PVDD	3.0	3.3	3.6	V	

DC Characteristics for Digital Circuit

Item	Symbol	Min.	Typ.	Max.	Unit	Conditions
Logic-High Input Voltage	Vih	0.7VDDI	-	VDDI	V	
Logic-Low Input Voltage	Vil	DGND	-	0.3VDDI	V	
Logic-High Output Voltage	Voh	VDDI-0.4	-	VDDI	V	
Logic-Low Output Voltage	Vol	DGND	-	DGND+0.4	V	

DC Characteristics for Analog Circuit

Item	Symbol	Min.	Typ.	Max.	Unit	Conditions
Positive High-Voltage Power	VGH	13	15	16.5	V	No Load@ FR=60Hz
Negative High-Voltage Power	VGL	-7	-10	-11	V	
Output Voltage Deviation	Vod	-	±35	±45	mV	
Standby Current	Isc	-		50	uA	
Operation Current	Ioc	-	20		mA	

6.3 24 Bit RGB Mode

Parallel 24-bit RGB Input Timing (PVDD=VDD=VDDI= 3.3V, AGND= 0V, TA=25°C)

Parallel 24-bit RGB Input Timing Table							
Item		Symbol	Min.	Typ.	Max.	Unit	Note
DCLK Frequency		Fclk	5	6	8	MHz	
DCLK Period		Tclk	125	167	200	ns	
HSYNC	Period Time	Th	325	371	438	DCLK	
	Display Period	Thdisp		320		DCLK	
	Back Porch	Thbp	3	43	43	DCLK	SYNC mode back porch control by H_BLANKING[7:0] setting Thbp= H_BLANKING[7:0]
	Front Porch	Thfp	2	8	75	DCLK	
	Pulse Width	Thw	2	4	43	DCLK	
VSYNC	Period Time	Tv	244	260	289	HSYNC	
	Display Period	Tvdisp		240		HSYNC	
	Back Porch	Tvbp	2	12	12	HSYNC	SYNC mode back porch control by V_BLANKING[7:0] setting Tvbp= V_BLANKING[7:0]
	Front Porch	Tvfp	2	8	37	HSYNC	
	Pulse Width	Tvw	2	4	12	HSYNC	

Note: It is necessary to keep Tvbp =12 and Thbp =43 in sync mode. DE mode is unnecessary to keep it.

6.4 Input Data Timing

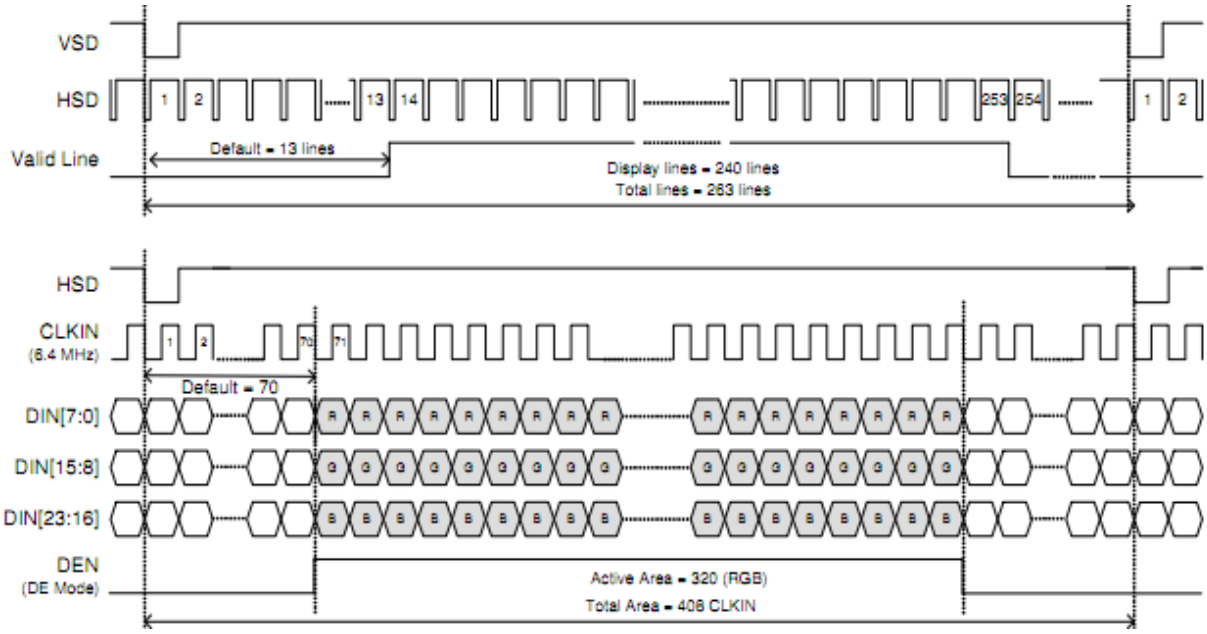

6.5 Vertical Timing Diagram (HV Mode)

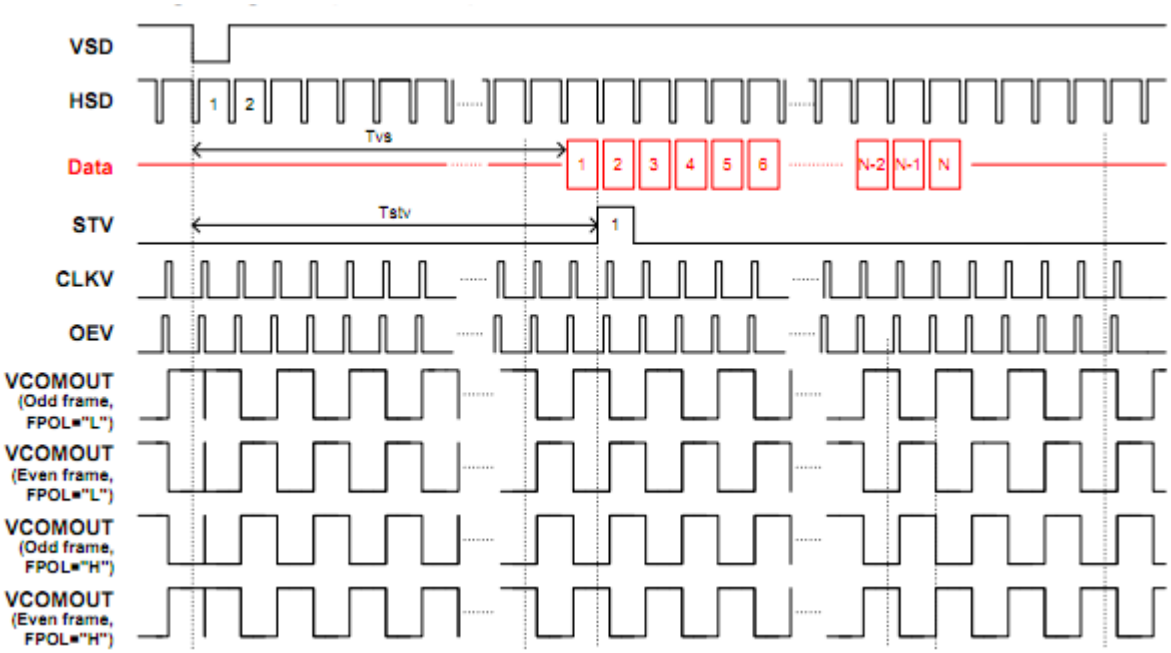

6.6 Vertical Timing Diagram (DE Mode)

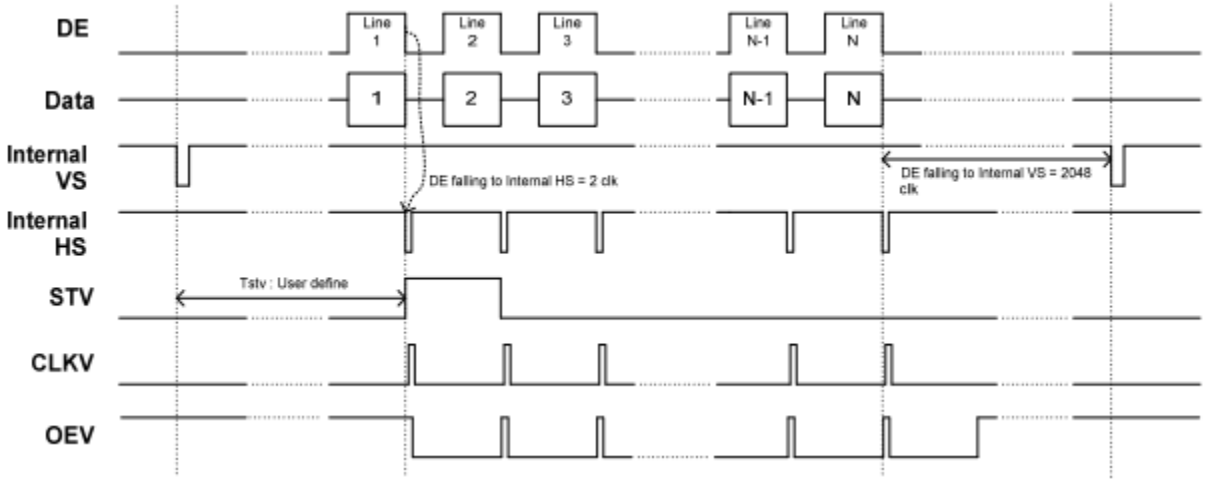

7. Optical Characteristics

Items		Symbol	Condition	Min.	Typ.	Max.	Unit	Remark	Note
Response time		Tr+Tf	-	-	50	80	ms	FIG.1	Note4
Contrast Ratio		CR		-	600	-	-	FIG.2	Note1
Surface luminance		LV	θ =0°	850	1000	-	cd/m2	FIG.2	Note2
Luminance uniformity		Yu	θ =0°	75	80	-	%	FIG.2	Note3
NTSC		-	θ =0°	-	50	-	%	FIG.2	Note5
Viewing angle		θ Cr>10	∅=90°	-	80	-	deg	FIG.3	Note6
			∅=270°	-	80	-	deg	FIG.3	
			∅=0°	-	80	-	deg	FIG.3	
			∅=180°	-	80	-	deg	FIG.3	
Chromaticity	Red	R_X	θ =0° ∅=0° Ta=25°	0.596	0.646	0.696	-	FIG.2 CIE1931	Note5
		R_Y		0.282	0.332	0.382	-		
	Green	G_X		0.273	0.323	0.373	-		
		G_Y		0.517	0.567	0.617	-		
	Blue	B_X		0.084	0.134	0.184	-		
		B_Y		0.071	0.121	0.171	-		
	White	W_X		0.282	0.332	0.382	-		
		W_Y		0.334	0.384	0.434	-		

Note1. Definition of contrast ratio

Contrast ratio(Cr) is defined mathematically by the following formula. For more information see FIG.2.

$$\text{Contrast ratio} = \frac{\text{Luminance with all pixels white}}{\text{Luminance with all pixels black}}$$

For contrast ratio, Surface Luminance, Luminance uniformity and CIE, the testing data is based on TOPCON' s BM-5 or BM-7 photo detector or compatible.

Note2. Definition of surface luminance.

Surface luminance is the luminance with all pixels displaying white. For more information see FIG.2.

Lv = Average Surface Luminance with all white pixels (P1,P2,P3, ...,Pn)

Note3. Definition of luminance uniformity

The luminance uniformity in surface luminance is determined by measuring luminance at each test position 1 through

n, and then dividing the maximum luminance of n points luminance by minimum luminance of n points luminance. For more information see FIG.2.

$$YU = \frac{\text{Minimum surface luminance with all white pixels (P1,P2,P3,.....,Pn)}}{\text{Maximum surface luminance with all white pixels (P1,P2,P3,.....,Pn)}}$$

Note4. Definition of response time

The response time is defined as the LCD optical switching time interval between "White" state and "Black" state. Rise time (Tr) is the time between photo detector output intensity changed from 90% to 10%. And fall time (Tf) is the time between photo detector output intensity changed from 10% to 90%.

For additional information see FIG1.

Note5. Definition of color chromaticity (CIE1931)

CIE (x,y) chromaticity,The x,y value is determined by screen active area center position P5.For more information see FIG.2.

Note6. Definition of viewing angle

Viewing angle is the angle at which the contrast ratio is greater than 10. Angles are determined for the horizontal or x axis and the vertical or y axis with respect to the z axis which is normal to the LCD surface. For more information see FIG.3.

For viewing angle and response time testing, the testing data is base on Autronic-Melchers's ConoScope or DMS series Instruments or compatible.

FIG.1.The definition of response Time

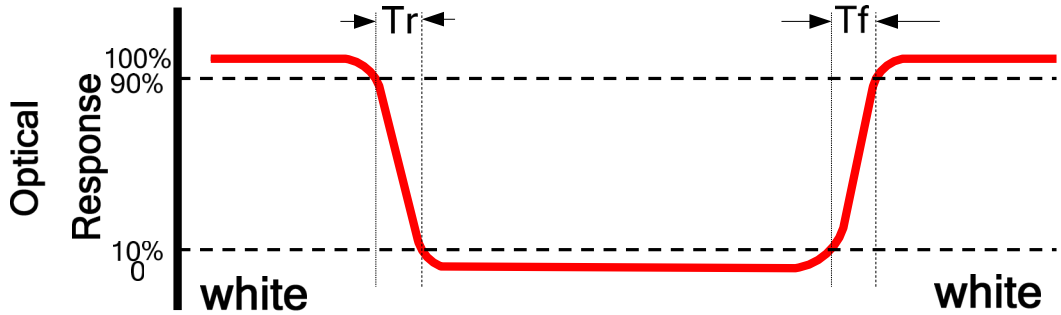

FIG.2. Measuring method for contrast ratio, surface luminance, luminance uniformity, CIE (x,y) chromaticity

Size: S≤5"(see Figure a) A : 5 mm B : 5 mm

H,V: Active area

Light spot size ∅=5mm (BM-5) or ∅=7.7mm (BM-7)50cm distance or compatible distance from the LCD surface to detector lens.

test spot position : see Figure a.

measurement instrument : TOPCON's luminance meter BM-5 or BM-7 or compatible (see Figure c).

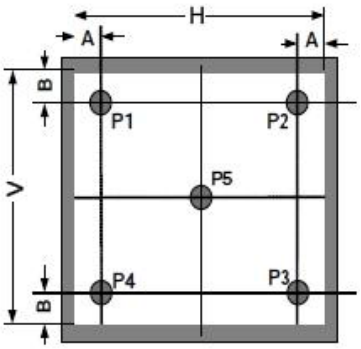

Figure a

Size: 5”＜S≤12.3”(see Figure b) H,V : Active area

Light spot size ∅=5mm (BM-5) or ∅=7.7mm (BM-7) 50cm distance or compatible distance from the LCD surface to detector lens.
test spot position : see Figure b.

measurement instrument: TOPCON’s luminance meter BM-5 or BM-7 or compatible (see Figure c).

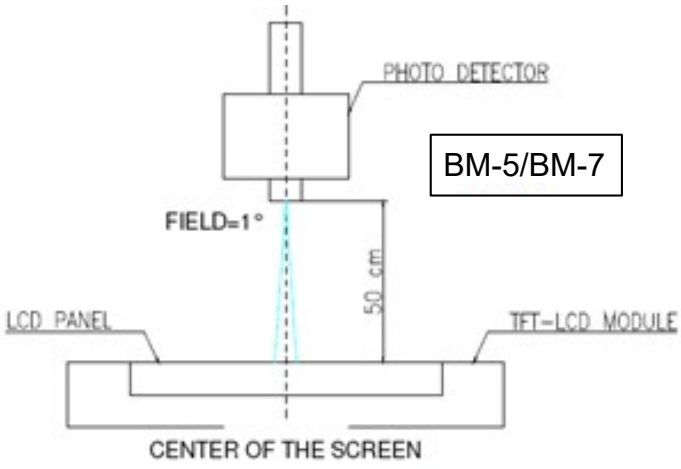

Figure c

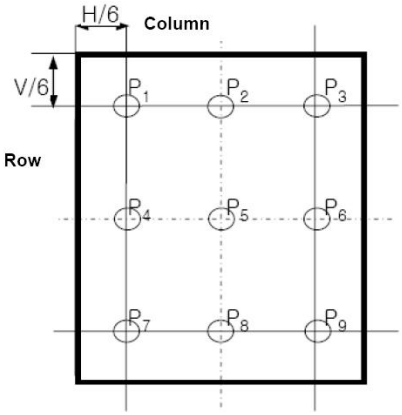

Figure b

FIG.3.The definition of viewing angle

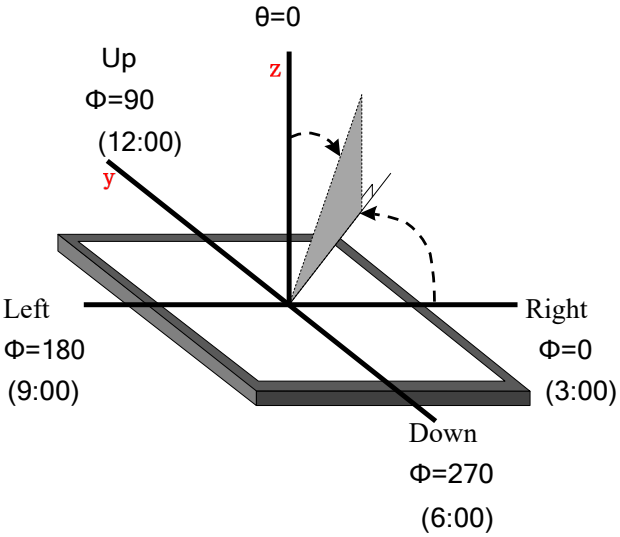

8. Environmental / Reliability Tests

No	Test Item	Condition	Remarks
1	High Temperature Operation	Ts= +70℃, 96hrs	Note 1 IEC60068-2-2, GB2423. 2-89
2	Low Temperature Operation	Ta= -20℃, 96hrs	Note 2 IEC60068-2-1 GB2423.1-89
3	High Temperature Storage	Ta= +80℃, 120hrs	IEC60068-2-2 GB2423. 2-89
4	Low Temperature Storage	Ta= -30℃, 120hrs	IEC60068-2-1 GB/T2423.1-89
5	High Temperature & Humidity Storage	Ta= +60℃, 90% RH max,120 hours	IEC60068-2-3 GB/T2423.3-2006
6	Thermal Shock (Non-operation)	-20℃ 30 min ~ +60℃ 30 min Change time: 5min, 30 Cycle	Start with cold temperature, end with high temperature IEC60068-2-14, GB2423.22-87
7	Electro Static Discharge (Operation)	C=150pF, R=330 Ω, 5 points/panel Air:±8KV, 5 times; Contact: ±4KV, 5 times; (Environment: 15℃ ~ 35℃, 30% ~ 60%, 86Kpa ~ 106Kpa)	IEC61000-4-2 GB/T17626.2-1998
8	Vibration (Non-operation)	Frequency range: 10~55Hz, Stroke: 1.mm Sweep: 10Hz~55Hz~10Hz 2 hours for each direction of X .Y. Z. (package condition)	IEC60068-2-6 GB/T2423.5-1995
9	Shock (Non-operation)	60G 6ms, ± X, ±Y , ± Z 3 times for each direction	IEC60068-2-27 GB/T2423.5-1995
10	Package Drop Test	Height: 80 cm, 1 corner, 3 edges, 6 surfaces	IEC60068-2-32 GB/T2423.8-1995

Note: 1. Ts is the temperature of panel's surface.
2. Ta is the ambient temperature of sample.
3. The size of sample is 5pcs.

9. Mechanical Drawing

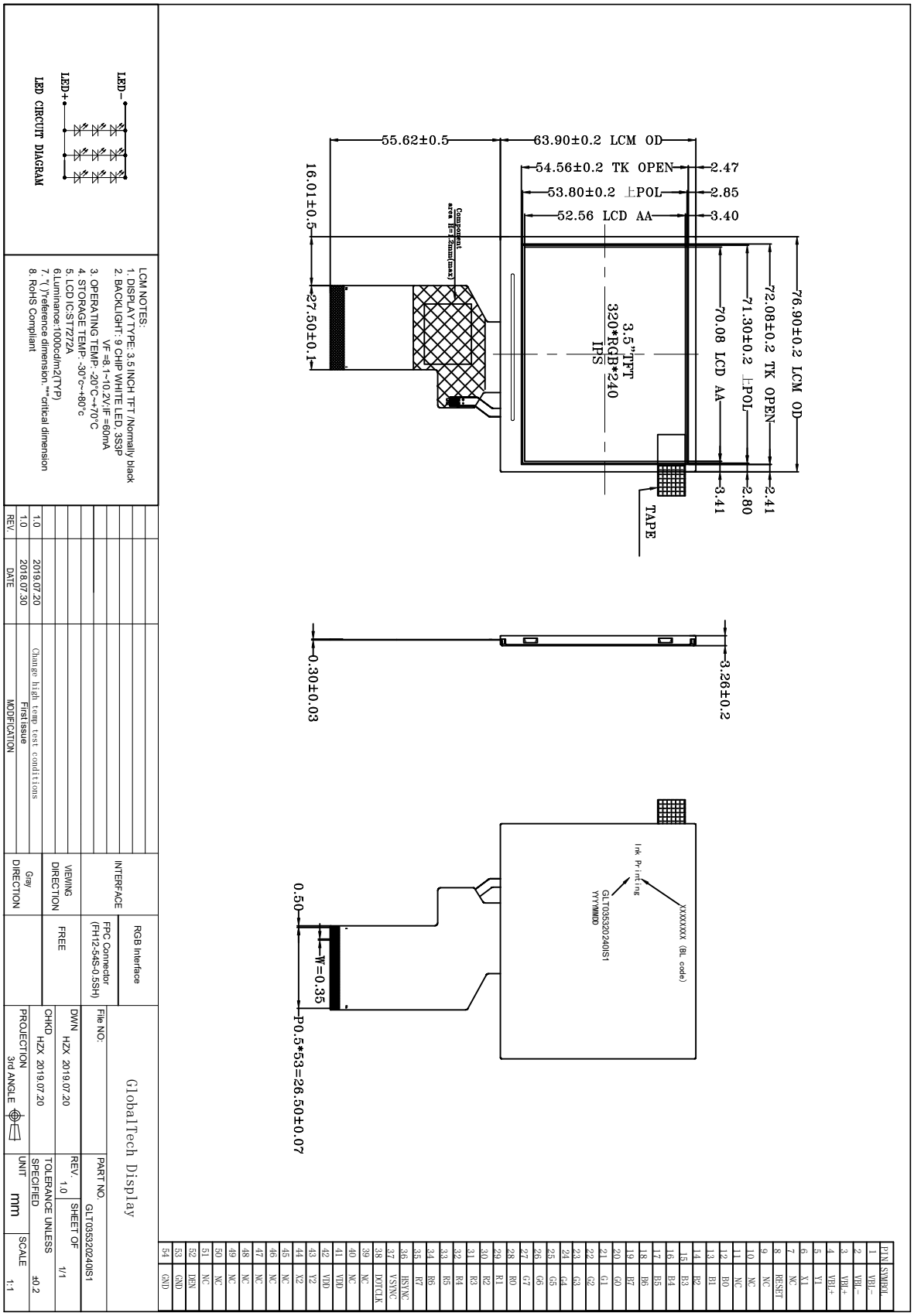

10. Packing

Packing Method

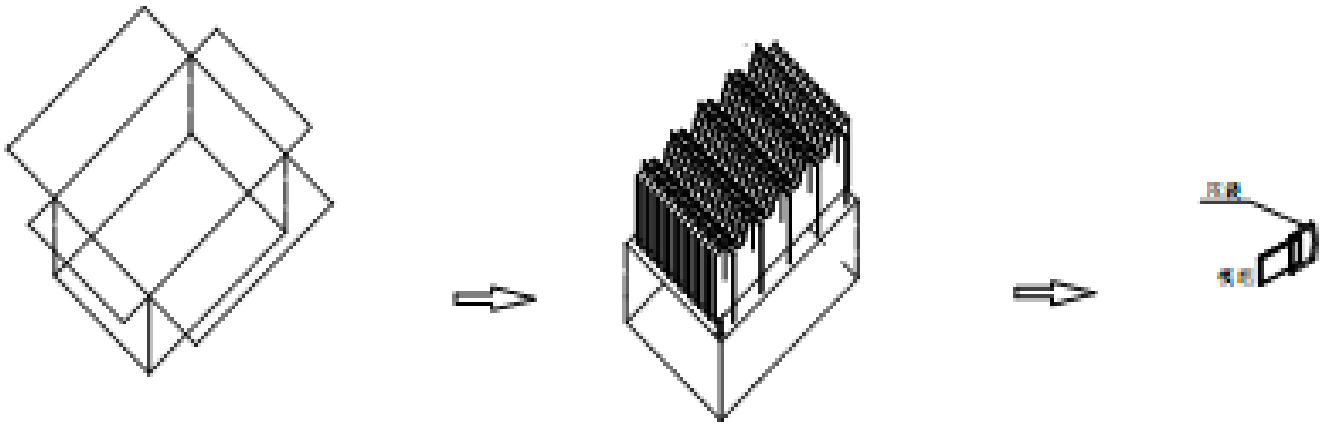

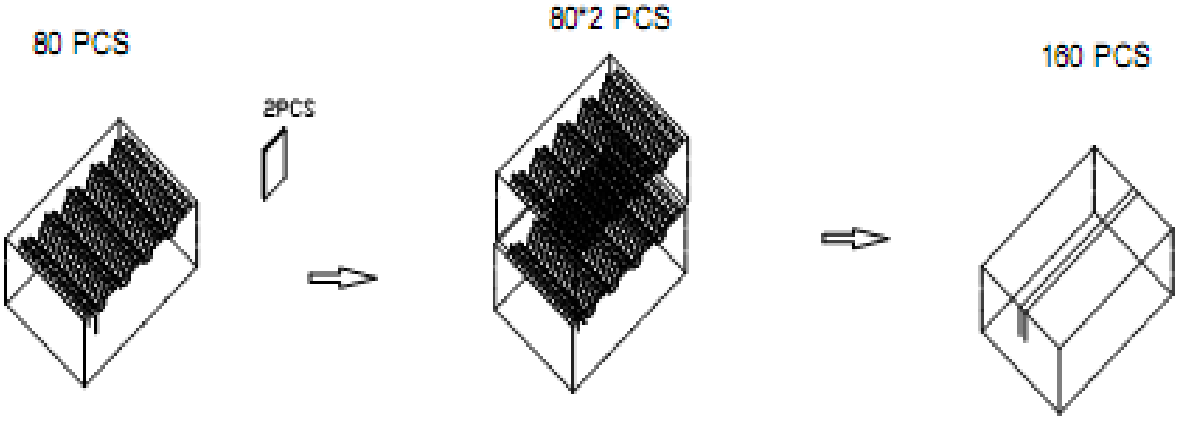

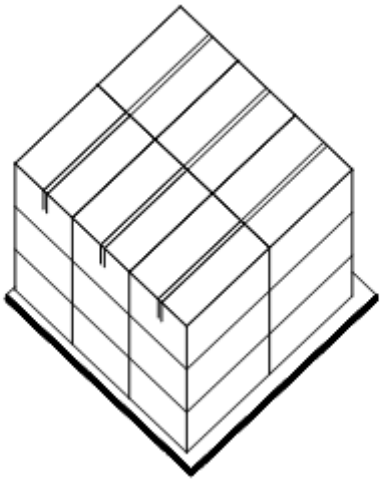

11. TFT-LCD Module Inspection Criteria

11.1 Scope

The incoming inspection standards shall be applied to TFT–LCD Modules (hereinafter called "Modules") that supplied by GlobalTech Display.

11.2 Incoming Inspection

The customer shall inspect the modules within twenty calendar days of the delivery date (the inspection period) at its own cost. The result of the inspection（acceptance or rejection）shall be recorded in writing, and a copy of this writing will be promptly sent to the seller, If the results of the inspecting from buyer does not send to the seller within twenty calendar days of the delivery date. The modules shall be regards as acceptance. Should the customer fail to notify the seller within the inspection period, the buyer's right to reject the modules shall be lapsed and the modules shall be deemed to have been accepted by the buyer.

11.3 Inspection Sampling

11.3.1. Lot size: Quantity per shipment lot per model
11.3.2. Sampling type: Normal inspection, Single sampling
11.3.3. Inspection level: II
11.3.4. Sampling table: MIL-STD-105E
11.3.5. Acceptable quality level (AQL). Major defect: AQL=0.65 Minor defect: AQL=1.00

11.4 Inspection Conditions

11.4.1 Ambient conditions:
a. Temperature: Room temperature 25±5℃
b. Humidity: (60±10) %RH
c. Illumination: Single fluorescent lamp non-directive (300 to 700 Lux)
11.4.2 Viewing distance
The distance between the LCD and the inspector's eyes shall be at least 35±5cm.
11.4.3 Viewing Angle
U/D: 45° / 45° , L/R: 45° / 45°

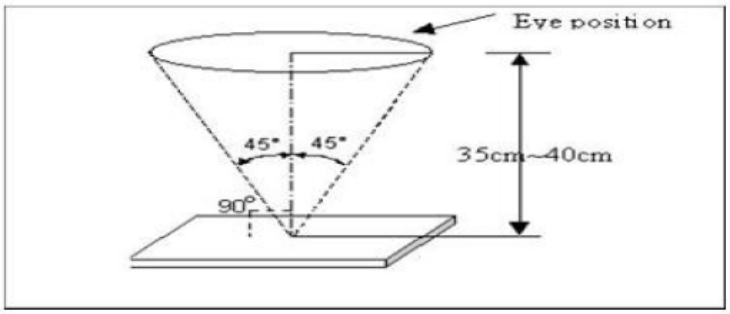

11.5 Inspection Criteria

Defects are classified as major defects and minor defects according to the degree of Defectiveness defined herein.

11.5.1 Major defect

Item No	Items to be inspected	Inspection Standard
5.1.1	All functional defects	1) No display 2) Display abnormally 3) Short circuit 4) line defect
`5.1.2	Missing	Missing function component
5.1.3	Crack	Glass Crack

11.5.2 Minor defect

Item No	Items to be inspected	Inspection standard	
5.2.1	Spot Defect Including Black spot White spot Pinhole Foreign particle Polarizer dirt	For dark/white spot is defined $\varphi = (x+y)/2$ 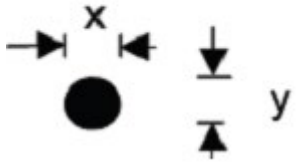	
		Size φ(mm)	Acceptable Quantity
		φ≤0.05	Ignore
		0.05 < Φ ≤0.15	2
		0.15< Φ	Not allowed
5.2.2	Polarizer dirt, particle	Size ϕ (mm)	Acceptable Quantity
		ϕ ≤0.15	1
		Φ>0.15	Not allowed
5.2.3	Line Defect Including Black line White line Scratch	Define:	

<table>
<tr><td></td><td></td><td> 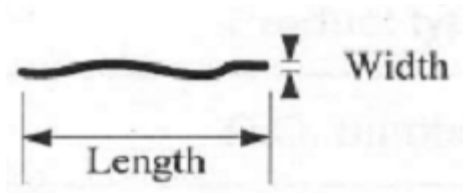

<table>
<tr><th>Width(mm) Length(mm)</th><th>Acceptable Quantity</th></tr>
<tr><td>W≤0.05</td><td>Ignore</td></tr>
<tr><td>0.05 < W≤0.1
L≤1.5</td><td>1</td></tr>
<tr><td>0.1 < W，or L>1.5</td><td>Not allowed</td></tr>
</table></td></tr>
<tr><td>5.2.4</td><td>Polarizer
Dent/Bubble</td><td>Not allowed</td></tr>
<tr><td>5.2.5</td><td>Electrical Dot
Defect</td><td>Bright and Black dot define:
 

and
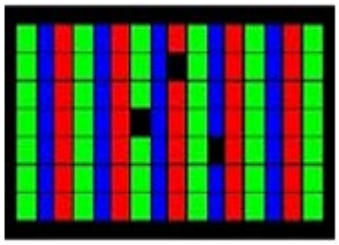
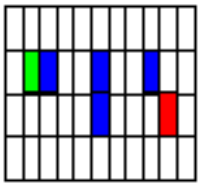
Two Adjacent Dot
<table>
<tr><td colspan="4">Inspection pattern: Full white、Full black、Red、green and blue screens</td></tr>
<tr><td rowspan="2">Item</td><td colspan="3">Acceptable Quantity</td></tr>
<tr><td>I</td><td>O</td><td>Note</td></tr>
<tr><td>Black dot defect</td><td colspan="2">1</td><td rowspan="2">(5mm≤Distance)</td></tr>
<tr><td>Bright dot defect</td><td colspan="2">1</td></tr>
<tr><td>Two Adjacent Dot</td><td colspan="2">Not allow</td><td></td></tr>
</table></td></tr>
</table>

5.2.6	Glass defect	1.Corner Fragment: 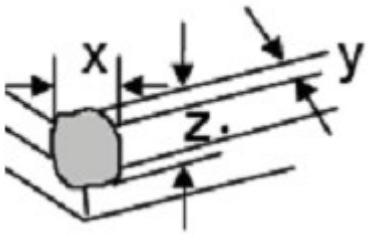	
		Size(mm)	**Acceptable Quantity**
		X≤2mm Y≤1mm Z≤T	Ignore T：Glass thickness X: Length Y: Width Z: thickness
		2. Side Fragment: 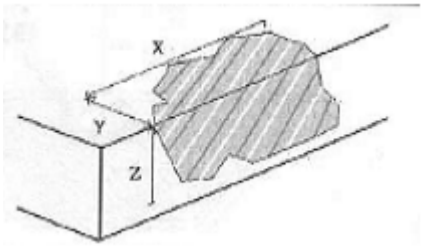	
		Size(mm)	**Acceptable Quantity**
		X≤5.0mm Y ≤1mm Z≤T	T：Glass thickness X: Length Y: Width Z: thickness

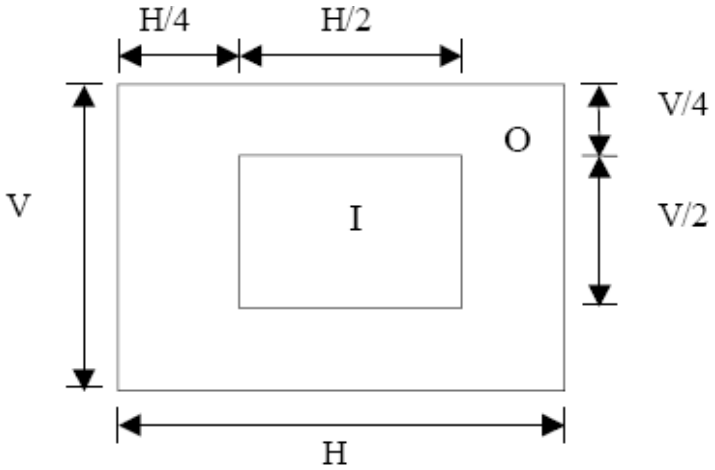

I area & O area

Note: 1). Dot defect is defined as the defective area of the dot area is larger than 50% of the dot area.
2). The distance between two bright dot defects (red, green, blue, and white) should be larger than 15mm.
3). The distance between black dot defects or black and bright dot defects should be more than 5mm apart.
4). Polarizer bubble is defined as the bubble appears on active display area. The defect of polarizer bubble shall be ignored if the polarizer bubble appears on the outside of active display area.

11.6 Mechanics specification

As for the outside dimension, weight of the modules, please refer to product specification
For more details

12. Precautions for Use of LCD modules

12.1 Handling Precautions

12.1.1. The display panel is made of glass. Do not subject it to a mechanical shock by dropping it from a high place, etc.

12.1.2. If the display panel is damaged and the liquid crystal substance inside it leaks out, be sure not to get any in your mouth, if the substance comes into contact with your skin or clothes, promptly wash it off using soap and water.

12.1.3. Do not apply excessive force to the display surface or the adjoining areas since this may cause the color tone to vary.

12.1.4. The polarizer covering the display surface of the LCD module is soft and easily scratched. Handle this polarizer carefully.

12.1.5. If the display surface is contaminated, breathe on the surface and gently wipe it with a soft dry cloth. If still not completely clear, moisten cloth with one of the following solvents:

- Isopropyl alcohol
- Ethyl alcohol

Solvents other than those mentioned above may damage the polarizer. Especially, do not use the following:

- Water
- Ketene
- Aromatic solvents

12.1.6. Do not attempt to disassemble the LCD Module.

12.1.7. If the logic circuit power is off, do not apply the input signals.

12.1.8. To prevent destruction of the elements by static electricity, be careful to maintain an optimum work environment.

12.1.8.1. Be sure to ground the body when handling the LCD Modules.

12.1.8.2. Tools required for assembly, such as soldering irons, must be properly ground.

12.1.8.3. To reduce the amount of static electricity generated, do not conduct assembly and other work under dry conditions.

12.1.8.4. The LCD Module is coated with a film to protect the display surface. Be care when peeling off this protective film since static electricity may be generated.

12.2 Storage Precautions

12.2.1. When storing the LCD modules, avoid exposure to direct sunlight or to the light of fluorescent lamps.
12.2.2. The LCD modules should be stored under the storage temperature range If the LCD modules will be stored for a long time, the recommend condition is:
Temperature: 0℃ ~ 40℃
Relatively humidity: ≤80%
12.2.3. The LCD modules should be stored in the room without acid, alkali and harmful gas.

12.3 Transportation Precautions

The LCD modules should be no falling and violent shocking during transportation, and also should avoid excessive press, water, damp and sunshine.