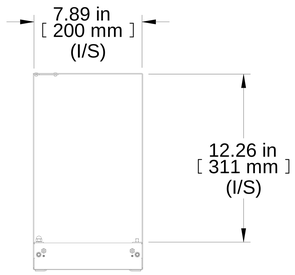

TOP VIEW

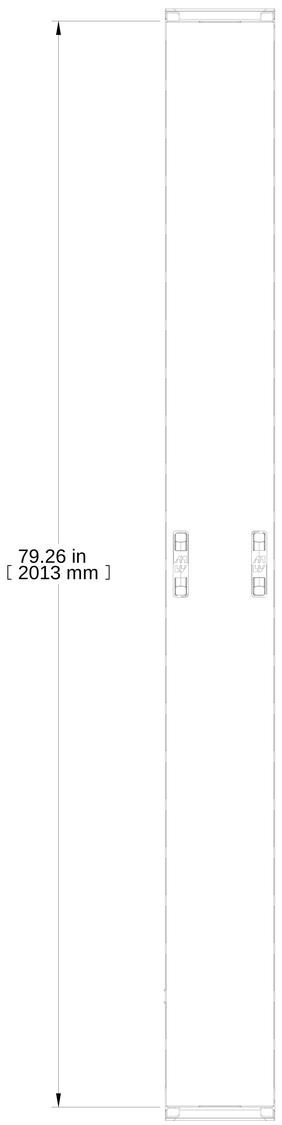

FRONT VIEW

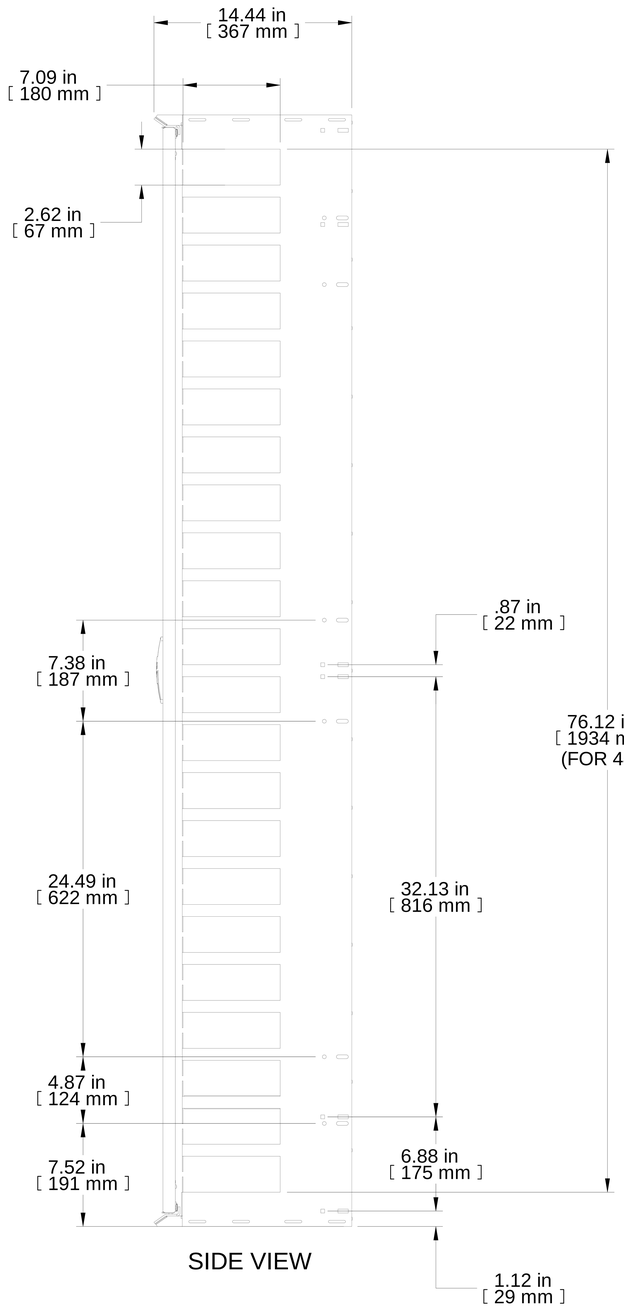

SIDE VIEW

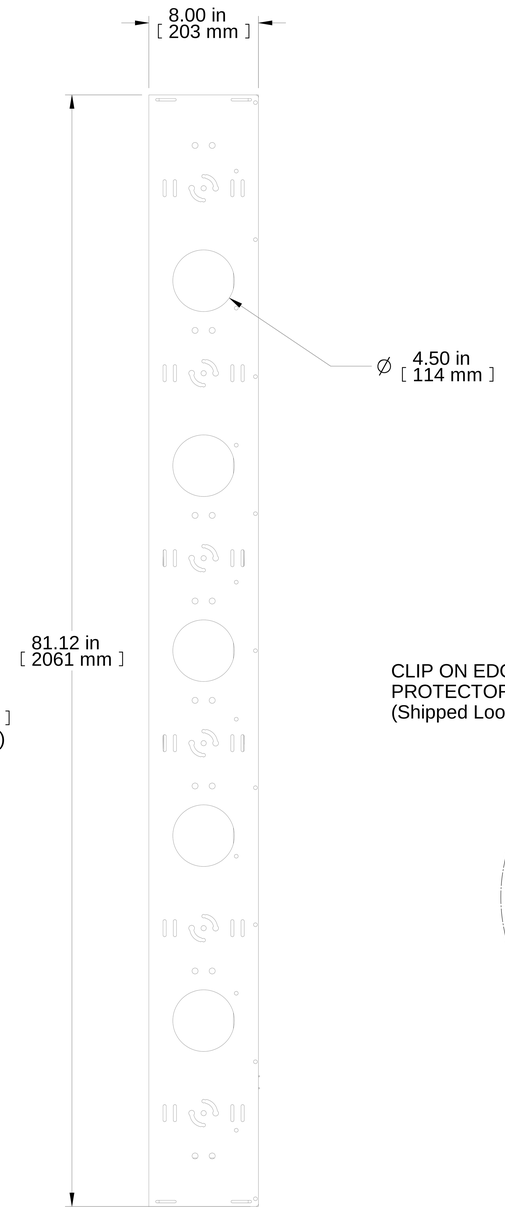

REAR VIEW

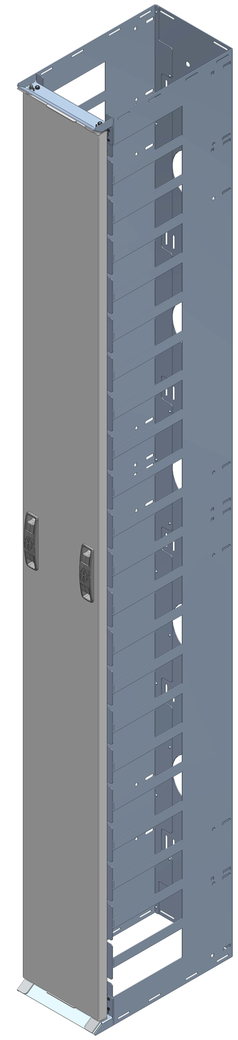

ISOMETRIC

DOOR REMOVED

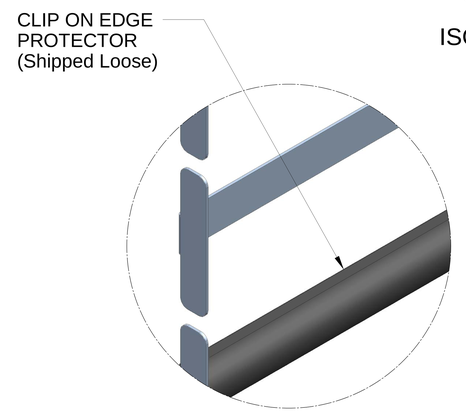

DETAIL A

PART NUMBERS	
FRCM44U812	PAINTED BLACK TEXTURED

NOTES

Includes Dual Hinged Door and Clip-On Protectors (Shipped Loose)
Hardware Included
See Hammond Website for More Information and Other Accessories

Français

Pour tous les détails sur nos produits,
svp veuillez consulter notre site www.hammondmfg.com

Data subject to change without notice. Isometric drawing not to scale.
Les données sont sujettes à changement sans préavis.

HAMMOND MANUFACTURING®

www.hammondmfg.com

PART NO. **FRCM44U812**