NOTES:

THIRD ANGLE PROJ.

REVISIONS				
REV	DESCRIPTION	DATE	ECN	APPR
A	RELEASE TO MFG.	09-Nov-18	09601	EH

1. MATERIALS AND FINISHES:
   BODY & CONTACT - BeCu, GOLD PLATING
   INSULATOR - PTFE, NATURAL

2. ELECTRICAL:
   A. IMPEDANCE: 50 OHM
   B. FREQUENCY RANGE: DC - 26.5 GHz
   C. VSWR (RETURN LOSS) : 1.20 MAX. (-20.80 dB MIN) @ DC - 10 GHz
   1.40 MAX. (-15.60 dB MIN) @ 10 - 18 GHz
   1.50 MAX. (-14.00 dB MIN) @ 18 - 26.5 GHz
   D.DIELECTRIC WITHSTANDING VOLTAGE: 500 VRMS, MIN.

3. MECHANICAL:
   A. DURABILITY: 100 CYCLES MIN. WHEN MATED FULL DETENT JACK
   500 CYCLES MIN. WHEN MATED LIMITED DETENT JACK
   1000 CYCLES MIN. WHEN MATED A SMOOTH BORE JACK
   B. TEMPERATURE RANGE: -65°C TO +165°C
   C. MATING FORCES (PER DSCC #94007):

ENGAGEMENT:		DISENGAGEMENT:	
FULL DETENT:	15 LBS (67 N) MAX.	FULL DETENT:	2 LBS (9 N) MIN.
LIMITED DETENT:	10 LBS (45 N) MAX.	LIMITED DETENT:	2 LBS (9 N) MIN.
SMOOTH BORE:	2 LBS (9 N) MAX.	SMOOTH BORE:	0.5 LBS (2.2 N) MIN.

4. PACKAGING:
   A. QUANTITY: SINGLE PACK
   B. MARKING: BAG TO BE MARKED
   "AMPHENOL RF, SMP-FS2A-645 AND DATE CODE".

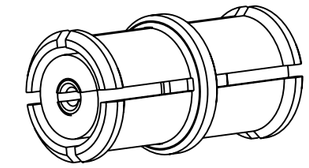

SCALE 7.000

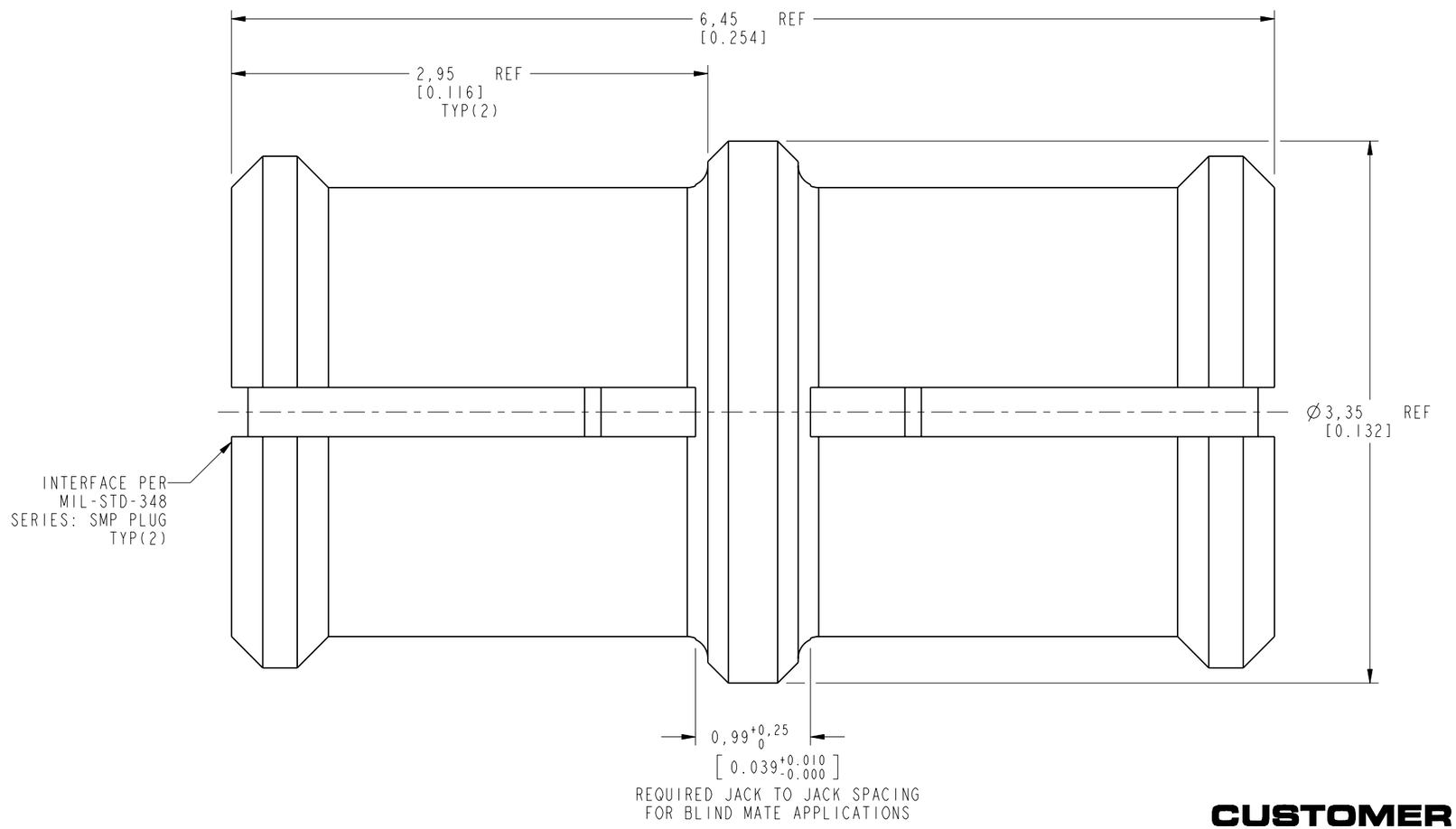

CUSTOMER OUTLINE DRAWING

ALL OTHER SHEETS ARE FOR INTERNAL USE ONLY

UNLESS OTHERWISE SPECIFIED, DIMENSIONS ARE IN METRIC AND TOLERANCES ARE:

<0.5mm	0.5 - 6mm	6 - 30mm	30 - 120mm	ANGLES
± 0.05mm	±0.1mm	±0.2mm	± 0.3mm	±1°

NOTICE - These drawings, specifications, or other data (1) are, and remain the property of Amphenol corp. (2) must be returned upon request; and (3) are confidential and not to be disclosed to any person other than those to whom they are given by Amphenol Corp. the furnishing of these drawings, specifications, or other data by Amphenol Corp., or to any other person to anyone for any purpose is not to be regarded by implication or otherwise in any manner licensing, granting rights to permitting such holder or any other person to manufacture, use or sell any product, process or design, patented or otherwise, that may in any way be related to or disclosed by said drawings, specifications, or other data.

MATERIAL
SEE NOTES

REFERENCE
EAR# 8529
REF: SMP-FSBA-645

CONFIGURATION LEVEL: In Work

FINISH

DRAWN	W.ZENG	DATE 12-Nov-18
ENGINEER	S.DUAN	DATE 15-Nov-18
APPROVED	S.HSIEH	DATE 15-Nov-18
CAD FILE		

TITLE
SMP STR BULLET ASSEMBLY, 6.45 MM

SCALE: 30.0:1.0 | SHEET 2 OF 2

DWG SIZE: B | REV: A

Amphenol RF
www.amphenolrf.com

DRAWING NO. SMP-FS2A-645
ITEM NO. SMP-FS2A-645
PART NO. SMP-FS2A-645