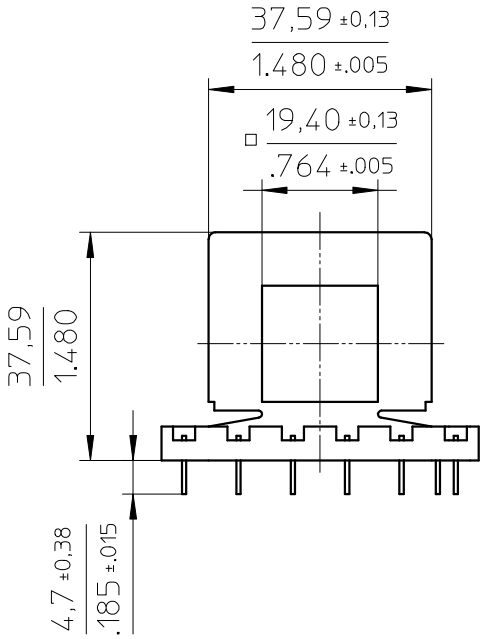

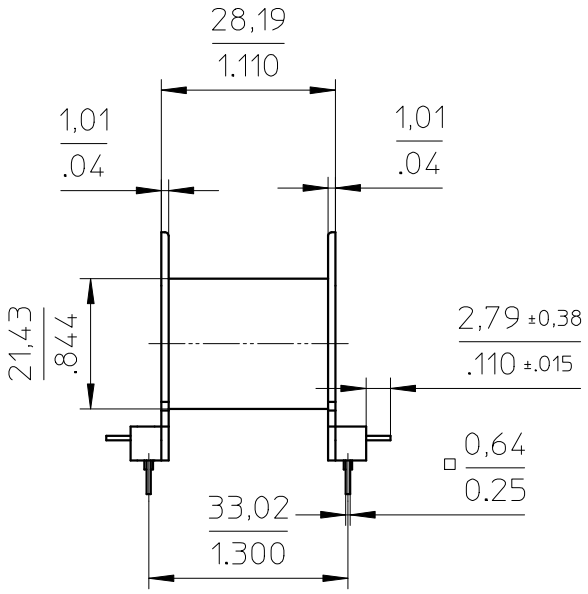

Grid Pattern

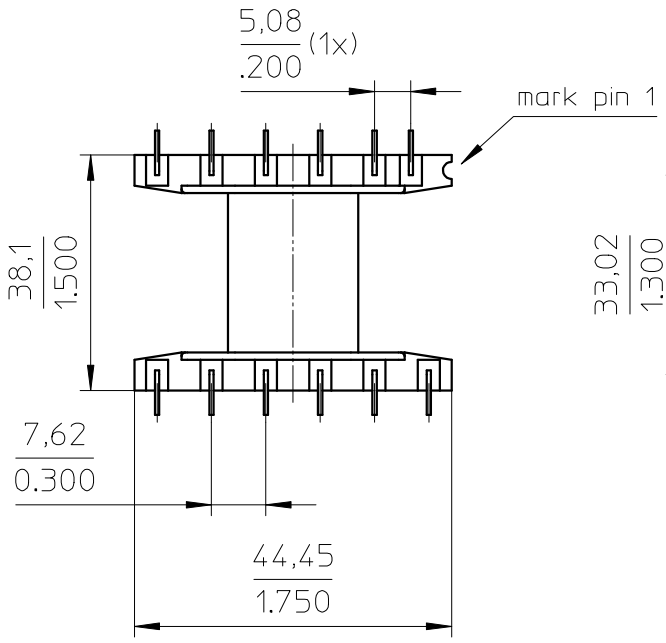

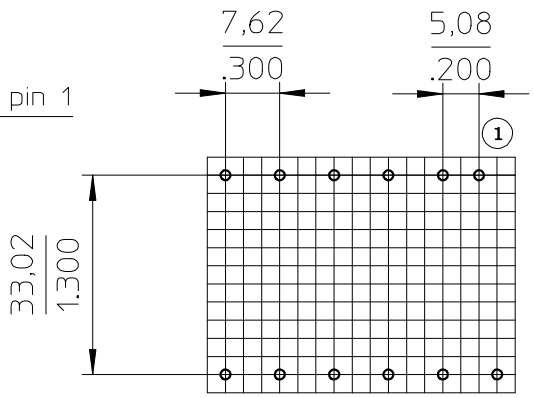

Coil former material:	Zytel 70G33L (PA66), glass-reinforced.
	UL file number: E41938 - UL94HB.
max. operating temp:	130°C, class B
pin material:	CuSn, Sn plated.
solderability:	acc. to IEC 60068-2-20 part2, Test Ta
	method 1, 235C-2sec. (MIL-STD 202, method 208).
mean length of turn:	4.4 inch (114 mm)
winding area:	0.317 sq inch (205 sq mm)

PROJ. EUROP.	CPH-E56/24/19-1S-12PD-Z	4335 060 27151	~~06-03-07~~ 06-07-28

NAME NAAM A.Wojtasz	SUPERS. VERV.	1	SH BL. SH BL. 112 – 001	010		A4
MPA	CHECK CONTR.	DAT.	Property of Eigendom van	© FERROXCUBE 2000		