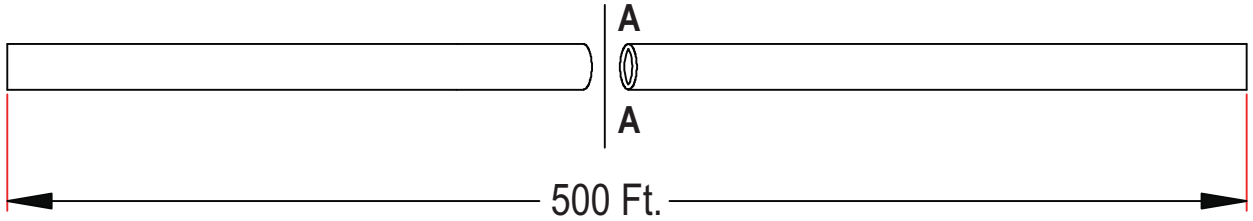

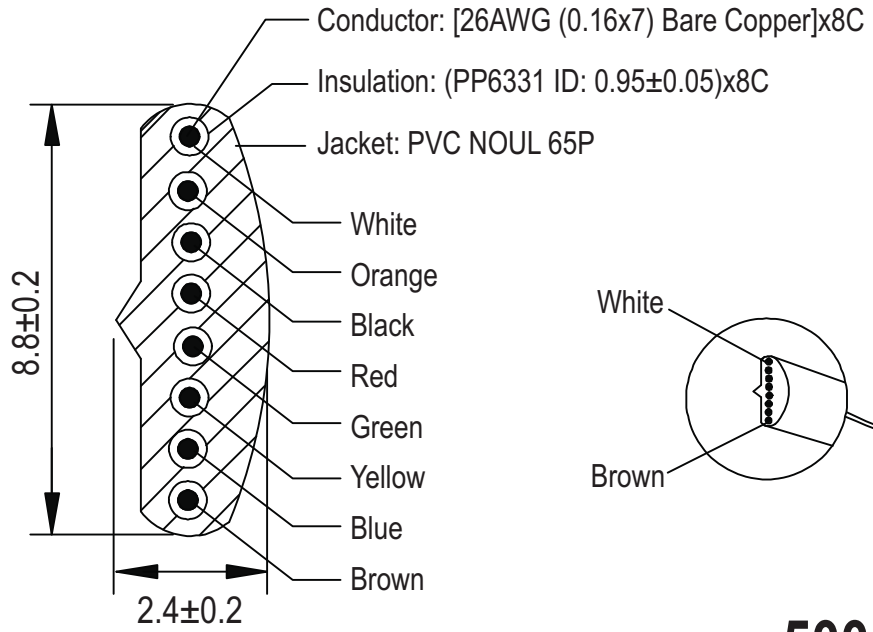

Sec: A - A

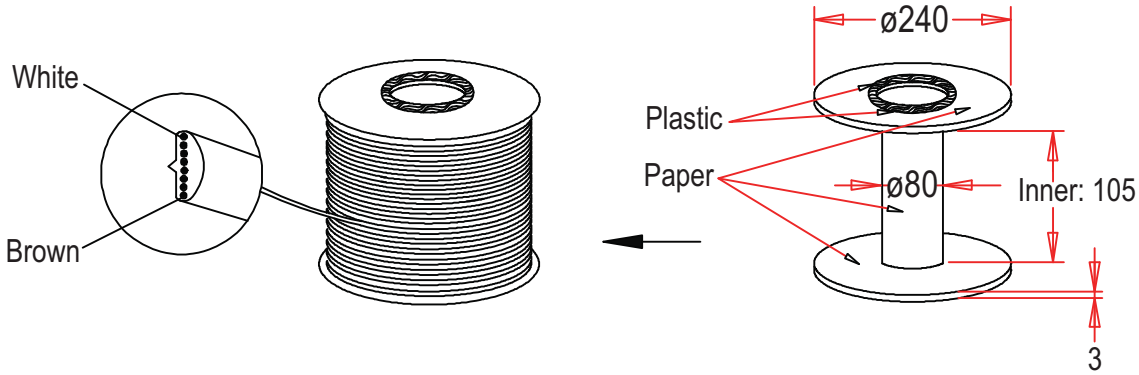

500Ft/R. "PE" Foam Wrapped

Voltage rating: 30V (DC)

Unit: MM

RoHS Complaint

Scale	1:1							Name
TOLERANCE						Drawn	11.18.11	Chappell
X.X	±0.40					Approved		
X.XX	±0.25							
X.XXX	±0.15							
Angle	±3°							
			Modification	Date	Name			

ASSMANN WSW components

Item No. AT-K-26-8-S/500-R

Title Modular Straight cable - Raw, 8 Contact, 26AWG, Silver, 500Ft

Drawing No. **rev00**

Replace | Sheet