Technical Data Sheet - Draft		Rosenberger
N NEX10	Adaptor N Plug – NEX10® Jack	**53S189-K00N1**

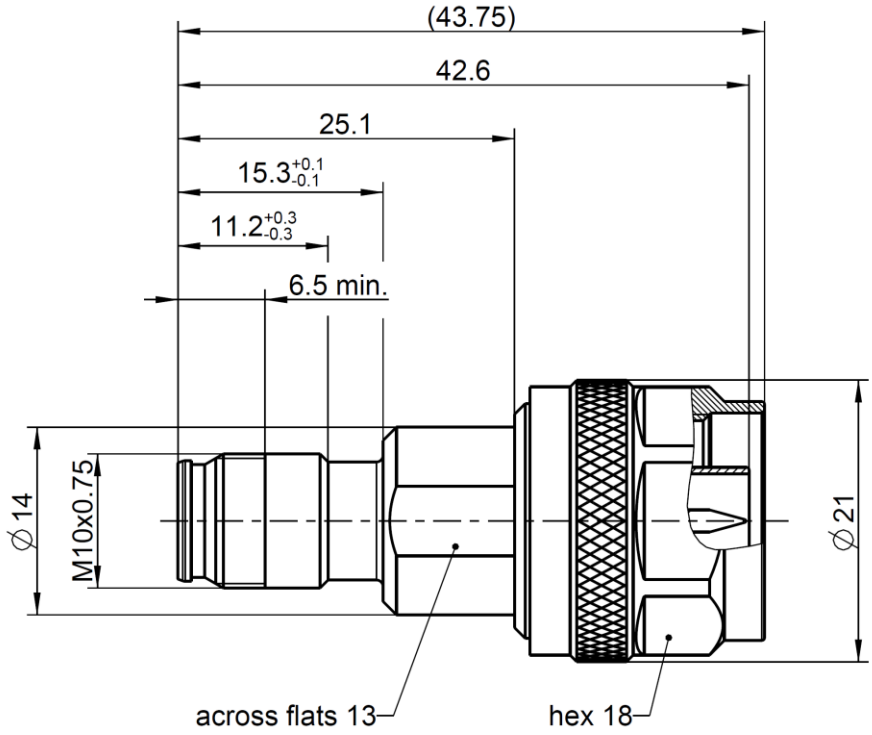

All dimensions are in mm; tolerances according to ISO 2768 m-H

Interface

According to	NEX10 side:	NEX10®
	N side:	IEC 61169-16, MIL-PRF-39012, CECC 22210

Material and Plating

Connector parts	**Material**	**Plating**
Center contact	CuBe	Silver, 3-6 µm
Outer contact	Brass	White bronze(e.g. Optalloy®)
Body	Brass	White bronze(e.g. Optalloy®)
Dielectric	PTFE	
Gasket	Silicone	

Dieses Dokument ist urheberrechtlich geschützt ● This document is protected by copyright ● Rosenberger Hochfrequenztechnik GmbH & Co. KG

Rosenberger Hochfrequenztechnik GmbH & Co. KG
P.O.Box 1260 D-84526 Tittmoning Germany
www.rosenberger.com

Tel. : +49 8684 18-0
Email : info@rosenberger.com

N NEX10	Adaptor N Plug – NEX10® Jack	53S189-K00N1

Electrical Data

Impedance	50 Ω
Frequency	DC to 11 GHz
Return loss	≥ 30 dB @ DC to 6 GHz
Insertion loss	$\leq 0.05 \times \sqrt{f\,[GHz]}$ dB
Insulation resistance	≥ 5 GΩ
Center contact resistance	≤ 2.0 mΩ, NEX10 side ≤ 1.0 mΩ, N side
Outer contact resistance	≤ 1.0 mΩ, NEX10 side ≤ 0.25 mΩ, N side
Operating voltage	500 V rms
RF-leakage	≥ 110 dB @ DC to 6 GHz
Power handling	100 W @ 2.0 GHz and 85°C ambient temperature
Intermodulation (3rd order)	≥ 155 dBc (2 x 43 dBm) @ 0.4 – 6.0 GHz

Mechanical Data

	NEX10 side	N side
Mating cycles	≥ 100	≥ 500
Recommended torque	1.5 Nm	0.7 Nm to 1.1 Nm

Environmental Data

Temperature range	-55 °C to +125 °C operating temperature
Thermal shock	IEC 61169-1 9.4.4
Vibration	IEC 61169-1 9.3.3 and IEC 60068-2-64
Shock	IEC 61169-1 9.3.14
Degree of protection (mated pair)	IEC 60529, IP68 24h / 1m
RoHS	compliant

Tooling

N/A

Suitable Cables

N/A

Weight

42 g/pc

While the information has been carefully compiled to the best of our knowledge, nothing is intended as representation or warranty on our part and no statement herein shall be construed as recommendation to infringe existing patents. In the effort to improve our products, we reserve the right to make changes judged to be necessary.

For the installation of the electrotechnical equipment, particular electrotechnical expertise is required.

Draft	Date	Approved	Date
F. Fraunhofer	26.01.2017	Chr. Janßen	01.02.2021

Rev.	Engineering change number	Name	Date
400	20-1927	B. Wollitzer	01.02.2021

Rosenberger Hochfrequenztechnik GmbH & Co. KG
P.O.Box 1260 D-84526 Tittmoning Germany
www.rosenberger.com

Tel. : +49 8684 18-0
Email : info@rosenberger.com

Dieses Dokument ist urheberrechtlich geschützt ● This document is protected by copyright ● Rosenberger Hochfrequenztechnik GmbH & Co. KG