NOTES:
1. MATERIAL:
  1.1 HOUSING: THERMOPLASTIC, HIGH TEMP., UL94V-0; COLOR: BLACK.
  1.2 CONTACT: COPPER ALLOY
  1.3 FITTING NAIL: COPPER ALLOY
  1.4 BOARD LOCK: COPPER ALLOY
2. FINISH:
  2.1 CONTACT:
    UNDERPLATING: 50u" MIN. NICKEL OVERALL.
    FINISH:GOLD 3u" MIN. ON CONTACT,GOLD FLASH ON SOLDER TAIL
  2.2 FITTING NAIL:
    UNDERPLATING: 50u" MIN. NICKEL OVERALL.
    FINISH:100~200u"MATT TIN OVER ALL
  2.3 BOARD LOCK:
    UNDERPLATING: 50u" MIN. NICKEL OVERALL.
    FINISH:MATT TIN OVER ALL
3. REFLOW SOLDER CAPABLE TO 260°C PER ACES SPEC.
4. ROHS COMPLIANT PRODUCT.
5. SPEC. PLS. REFER TO PS-52741-xxxxx-xxx
7. PACKING SPEC. PLS. REFER TO 52741-314CR-00(REEL)
8. THE PCB WARPAGE : 0.05MAX.
9. THE PCB Coplanarity : 0.08MAX.(ex.86.54mm&CONN.LAYOUT AREA),
10. PART NUMBER

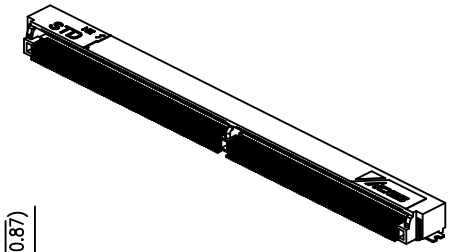

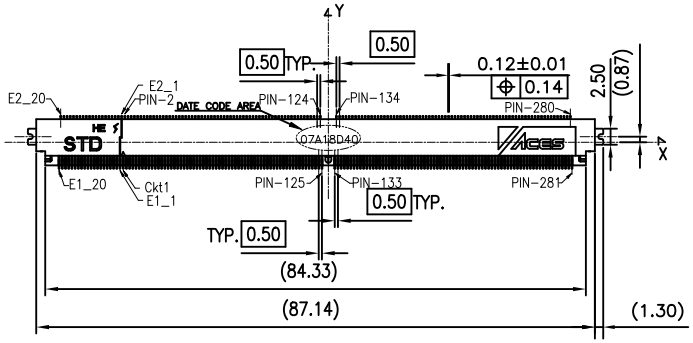

52741-XXX X X-XXX

NO OF CKT
314: 314 PIN

PACKING
0:REEL
2:TRAY

PLATING
A:GOLD 3u" MIN. ON CONTACT, GOLD FLASH ON SOLDER TAIL

XXX	COLOR	BOSS	CENTER	PACKAGE
001	BLACK	YES	NO BOARD LOCK	52741-314CR-00
002	BLACK	YES	HAVE BOARD LOCK	52741-314CR-00

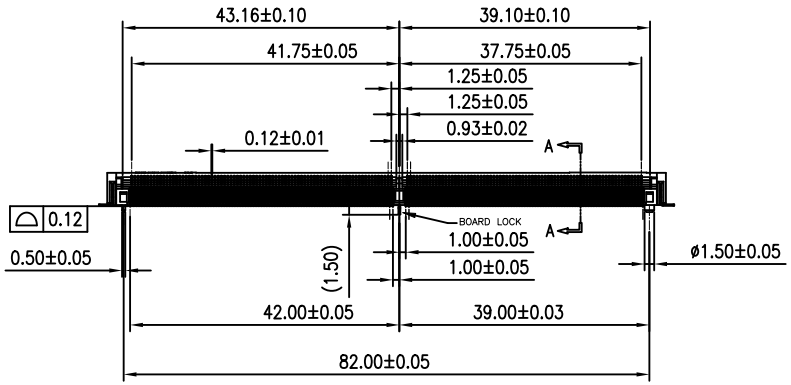

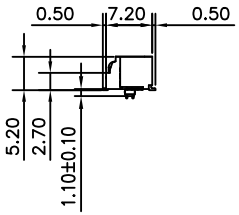

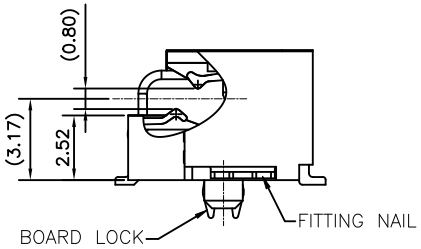

SECTION A-A Scale 4:1

QUALITY SYMBOLS				
MAJOR	DRAWN BY: Liang,lin ji	DATE: 20'/12/17	ACES ELECTRONICS	
CRITICAL	CHECKED BY: Lu, jing quan	DATE: 20'/12/17	TITLE: PCIE Gen4 MXM-3 314 PINS 0.5mm PITCH EDGE CARD CONN. SMT D/R R/A STD TYPE H=5.2mm (BTB H=2.7)	
GENERAL TOLERANCES (UNLESS SPECIFIED)	APPROVED BY: hsieh,fu yu	DATE: 20'/12/17		
X. ±0.5	UNITS: mm		SIZE: A4	RFQ NO.: RFQ-2008039
.X ±0.25				
.XX ±0.15				
.XXX ±0.1	SCALE: 2 : 1	SHEET NO.: 1 OF 3	REV: 1	DWG NO.: 52741-314XX-XXX
ANGLES ±2°				

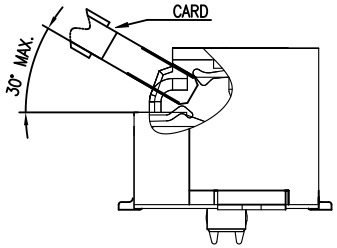

PCB 30° MAX In conn. Scale 4:1

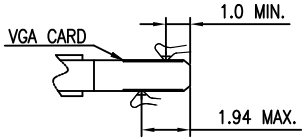

WIPE BOUND

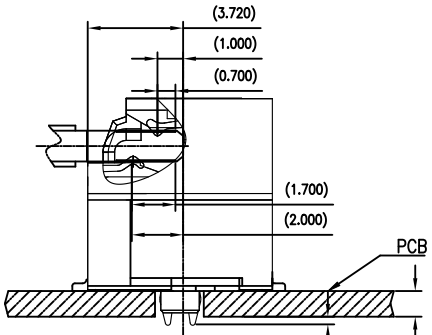

PCB on 90° Scale 4:1

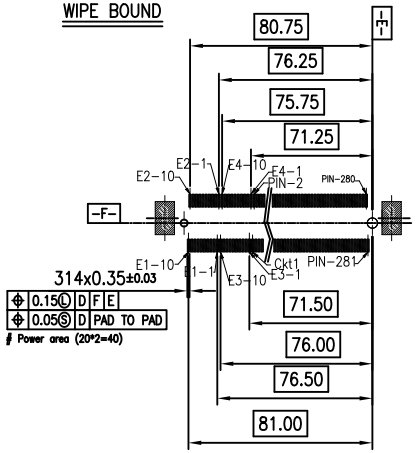

HIGH ELECTRICITY PER PIN LAYOUT

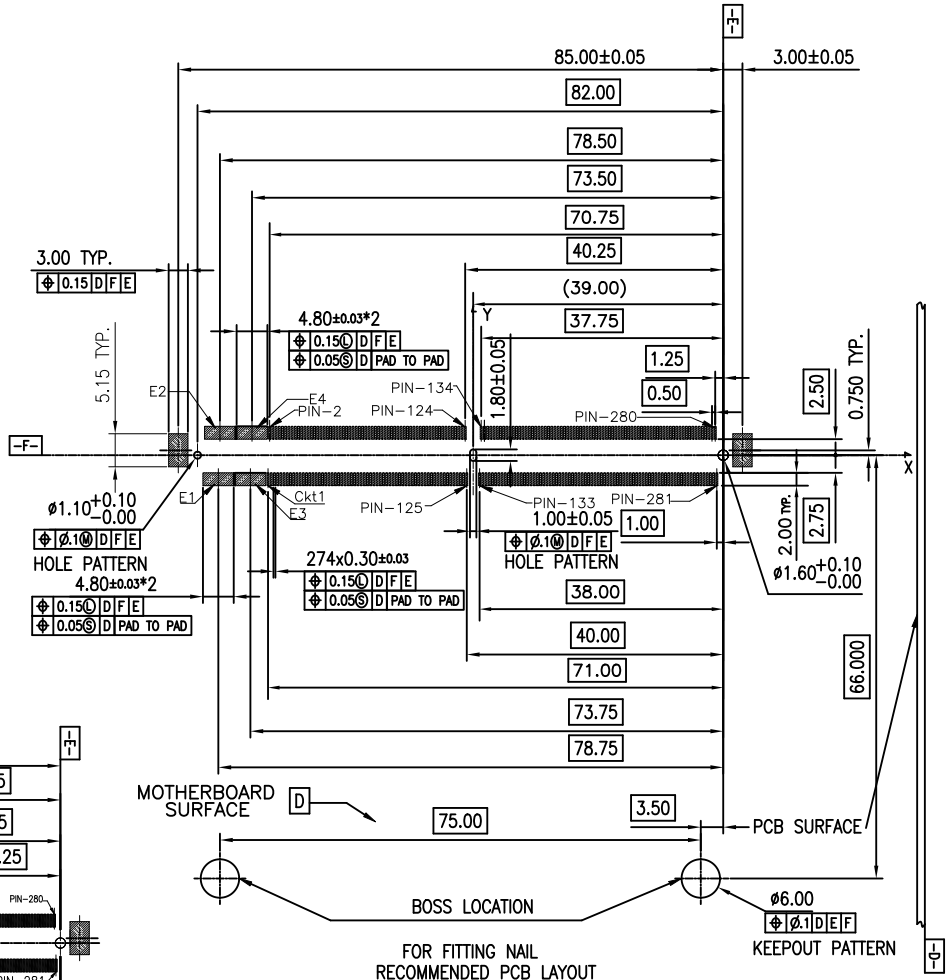

FOR FITTING NAIL
RECOMMENDED PCB LAYOUT
GENERAL TOLERANCE ±0.05

QUALITY SYMBOLS MAJOR Ⓜ CRITICAL Ⓒ	DRAWN BY: Liang,lin ji — DATE: 20'/12/17	ACES ELECTRONICS	
GENERAL TOLERANCES (UNLESS SPECIFIED) X. ±0.5 .X ±0.25 .XX ±0.15 .XXX ±0.1 ANGLES ±2°	CHECKED BY: Lu, jing quan — DATE: 20'/12/17	TITLE: PCIE Gen4 MXM-3 314 PINS 0.5mm PITCH EDGE CARD CONN. SMT D/R R/A STD TYPE H=5.2mm (BTB H=2.7)	
	APPROVED BY: hsieh,fu yu — DATE: 20'/12/17		
	UNITS: mm	SIZE: A4	RFQ NO.: RFQ-2008039
	SCALE: 2 : 1 — SHEET NO.: 2 OF3	REV: 1	DWG NO.: 52741-314XX-XXX

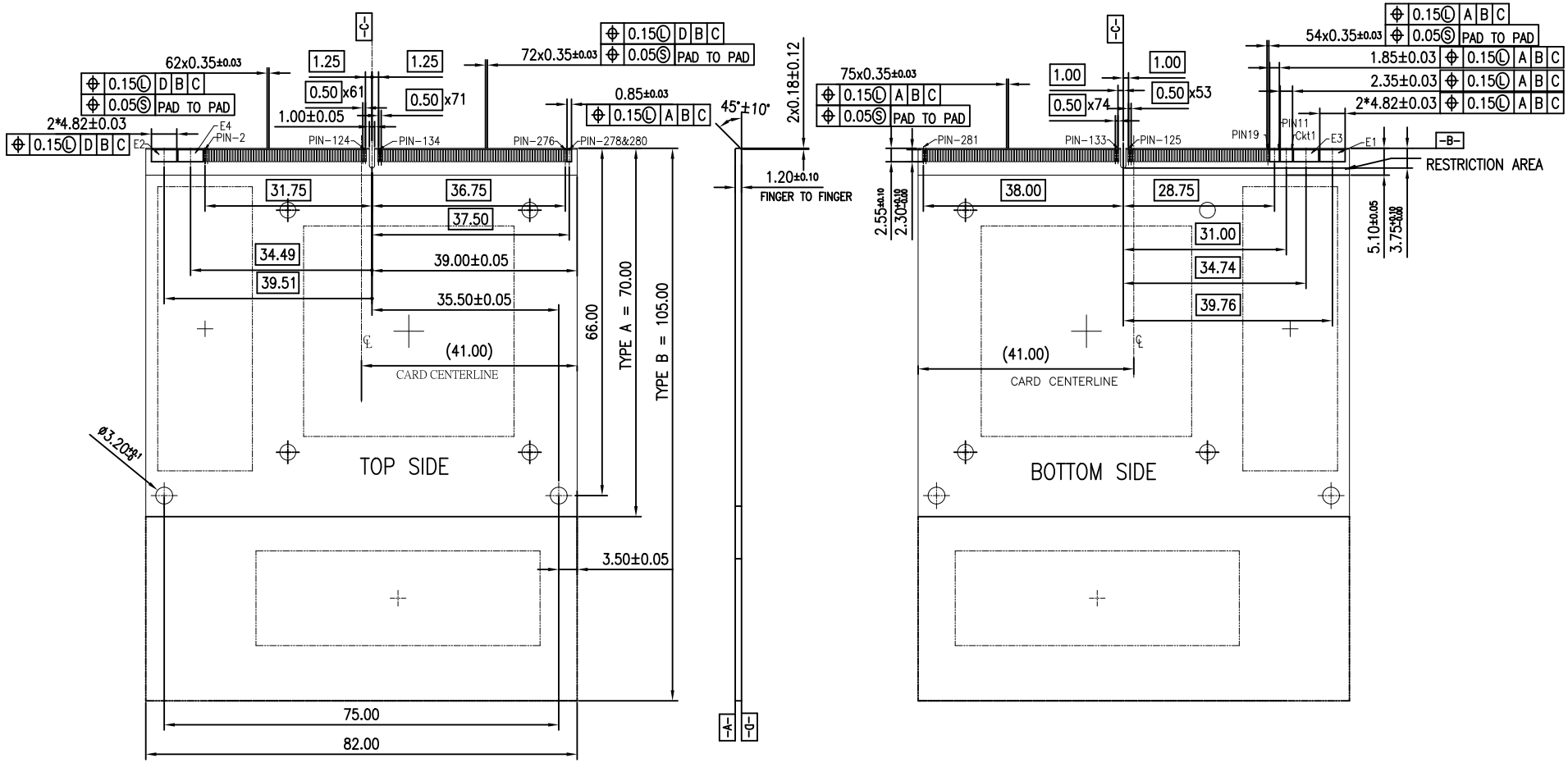

MXM-3 314PIN GOLD FINGER

MXM-3 MAX 321 CONTACT LOCATION

314 USEABLE (7 LOST TO KEY)

QUALITY SYMBOLS MAJOR Ⓜ CRITICAL Ⓒ	DRAWN BY: Liang,lin ji — DATE: 20'/12/17	ACES ELECTRONICS	
GENERAL TOLERANCES (UNLESS SPECIFIED)	CHECKED BY: Lu, jing quan — DATE: 20'/12/17	TITLE: PCIE Gen4 MXM-3 314 PINS 0.5mm PITCH EDGE CARD CONN. SMT D/R R/A STD TYPE H=5.2mm (BTB H=2.7)	
X. ±0.5 .X ±0.25 .XX ±0.15 .XXX ±0.1 ANGLES ±2°	APPROVED BY: hsieh,fu yu — DATE: 20'/12/17		
	UNITS: mm	SIZE: A4	RFQ NO.: RFQ-2008039
	SCALE: 2 : 1 — SHEET NO.: 3 OF 3	REV: 1	DWG NO.: 52741-314XX-XXX