THIS DOCUMENT IS THE PROPERTY OF KEYSTONE ELECTRONICS CORP. AND SHALL NOT BE REPRODUCED, DISTRIBUTED OR USED AS A BASIS FOR MANUFACTURE WITHOUT PRIOR WRITTEN PERMISSION FROM KEYSTONE ELECTRONICS CORP.

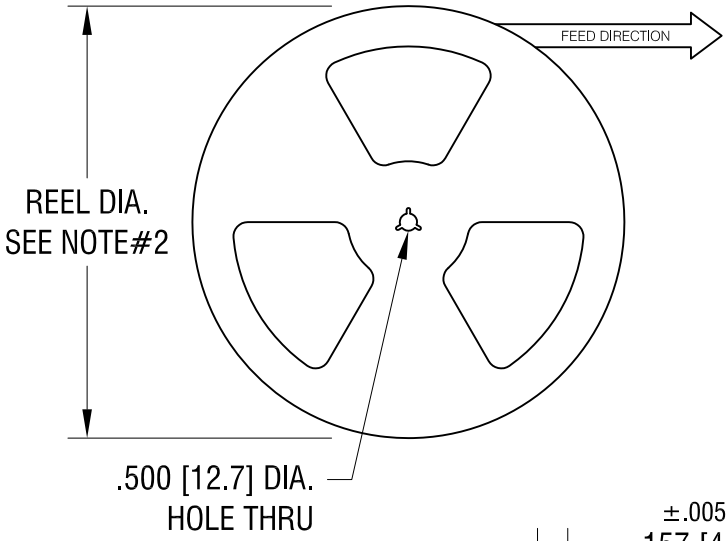

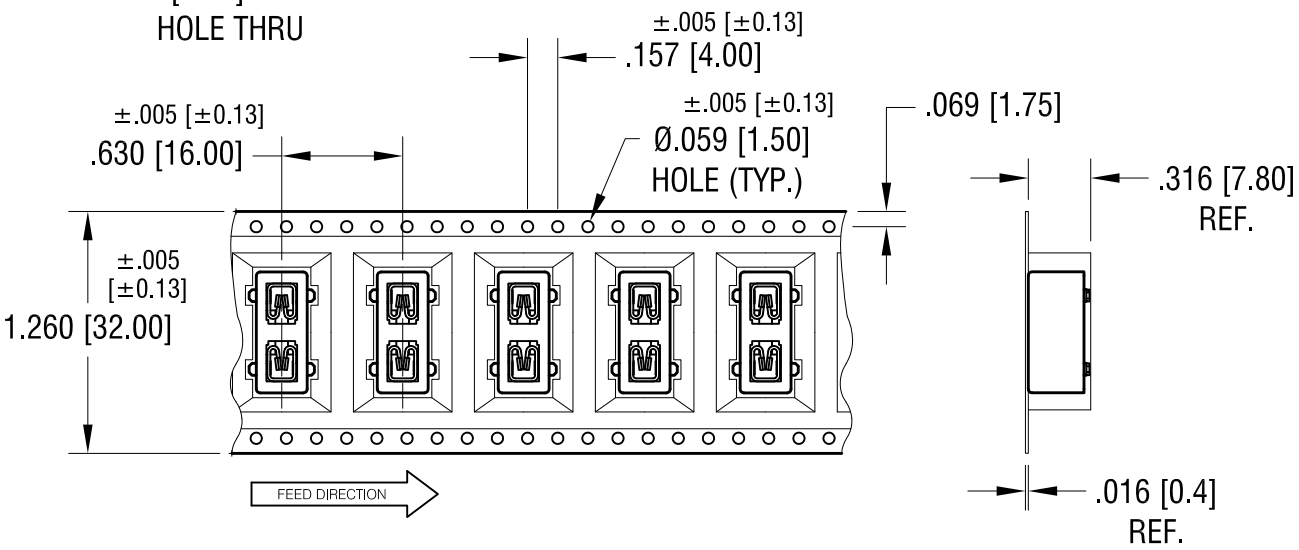

NOTES:

TAPE AND REEL SPECIFICATIONS:

1. TAPE:
   MAT'L - ALL CONDUCTIVE POLYSTYRENE CARRIER
   ANSI/EIA-481 STANDARD
   1.260 [32.0] WIDE; 0.630 [16.0] PITCH

2. REEL:
   13.0 [330.2] DIA. 500 PIECES OF
   PART NO. 3588-10 PER REEL.

3. MSL PACKAGING 500 PER BAG

DATE	DESCRIPTION	REV.
9.14.23	CHANGE AS PER ECN 23-155	A

KEYSTONE ELECTRONICS CORP.

www.keyelco.com • NEW HYDE PARK NY 11040 • Tel (516)328-7500

PART NAME: SM MINI AUTO-FUSE HOLDER ON TAPE			
MATERIAL: AS NOTED			
FINISH: AS NOTED	DRN BY: NT	DATE: 6.14.16	
	APP'D: RH	SCALE: X	
TOLERANCES INCH [MM] DECIMAL ± .015 [± 0.38] ANGULAR ± 1° UNLESS OTHERWISE SPECIFIED	CODE: C	DWG NO.: 3588-10TR	