used for: D-SUB

Part-NO.	No. of pos.	A ±0.2	B -0.2	C ±0.2
302A509200X	9	30.8	16.41	25.0
302A515200X	15	39.2	24.74	33.3
302A525200X	25	53.0	38.51	47.0
302A537200X	37	69.4	54.94	63.5

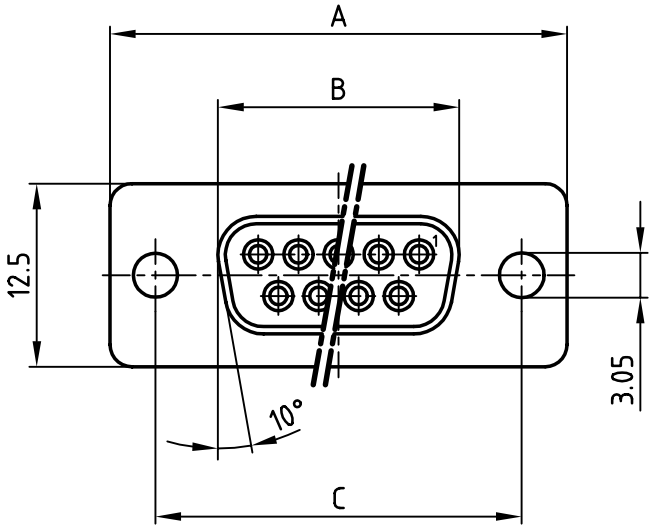

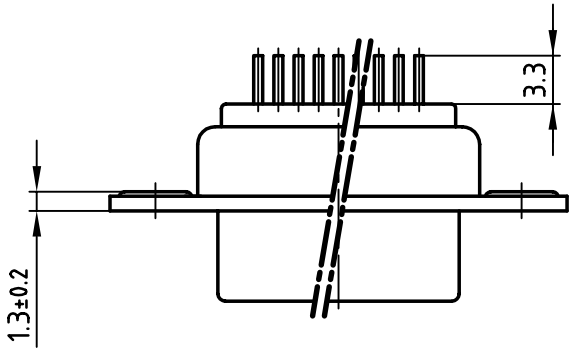

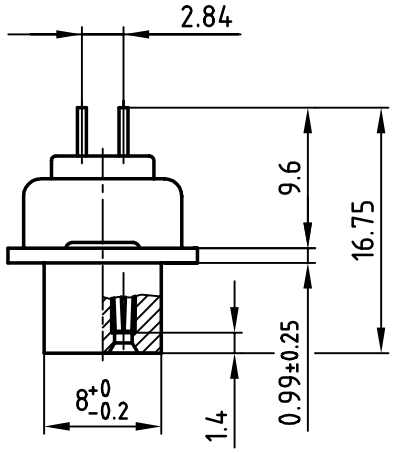

THIS DRAWING MAY NOT BE COPIED OR REPRODUCED IN ANY WAY, AND MAY NOT BE PASSED ON TO A THIRD PARTY WITHOUT WRITTEN PERMISSION. OWNERSHIP AND COPYRIGHT OF CONEC GmbH

DO NOT ALTER CAD DRAWING BY HAND

CONEC CORPORATION
BRAMPTON, ONTARIO

rev.	description	date	name

tolerance

2001	date	name
drawn	26.09.	Parei
appd.	26.09.	E. Mickenbecker
norm		
d-old		

scale: 2:1

material:

title:

D-SUB FEMALE

P.C. TAIL

with ⌀3.05mm through-hole

dwg no: 16K1A307A

AutoCAD 2000

DIN-A 4

sh: 1/1

part no: SEE TABLE