REV.	DATE	ECR NO.	DESCRIPTION
NC	12/30/04	–	INITIAL RELEASE
A	02/22/09	–	REVISE CENTER CONTACT PIN LENGTH

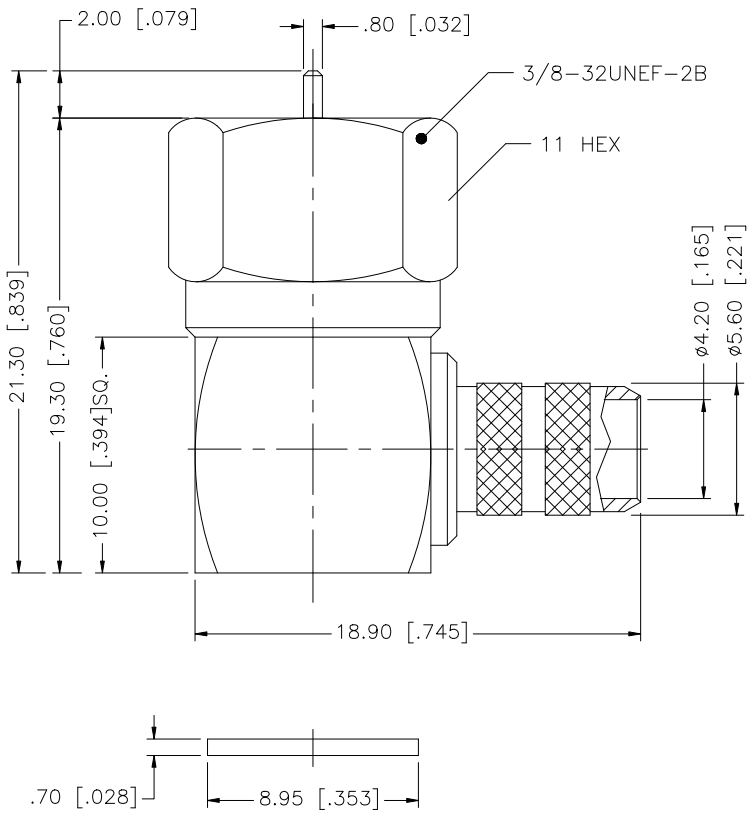

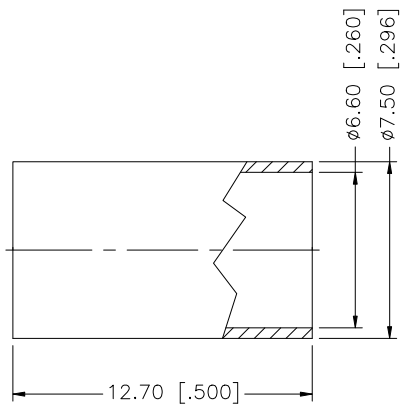

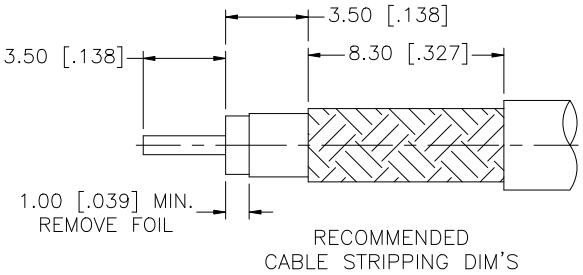

NOTES:

1. CRIMPED FERRULE HEX CRIMP SIZE .255" [6.48].

	DESCRIPTION	MATERIAL	FINISH	QTY
8				
7				
6	FERRULE	COPPER	NICKEL	1
5	COVER	BRASS	NICKEL	1
4	CONTACT PIN	BRASS	GOLD	1
3	INSULATOR	PTFE	NATURAL	1
2	BODY	BRASS	NICKEL	1
1	HOUSING	BRASS	NICKEL	1

UNLESS OTHERWISE SPECIFIED DIMENSIONS ARE IN MILLIMETERS. DIMENSIONS IN [ ] ARE IN INCHES AND FOR CUSTOMER REFERANCE ONLY.

UNLESS OTHERWISE SPECIFIED TOLERANCES FOR MILLIMETERS ARE:
0.5 – 8mm ± 0.20mm
8 – 30mm ± 0.40mm
30 – 120mm ± 0.50mm

UNLESS OTHERWISE SPECIFIED TOLERANCES FOR INCHES ARE:
.020 – .315 = ± 0.007"
.315 – 1.180 = ± 0.015"
1.180 – 4.724 = ± 0.020"

DO NOT SCALE DRAWING

APPROVALS		DATE
DRAWN	GRS	02/22/09
CHECKED		
ISSUED		
SHEET	1 OF 1	
CAD FILE	C:/222/222196.DWG	

Amphenol Connex

PART DESCRIPTION
F R/A CRIMP PLUG
(FOR LMR–240 CABLE – 75ohm)

PART NO. 222196

DWG. NO. 222196.DWG | REV. A | SIZE A | SCALE NA