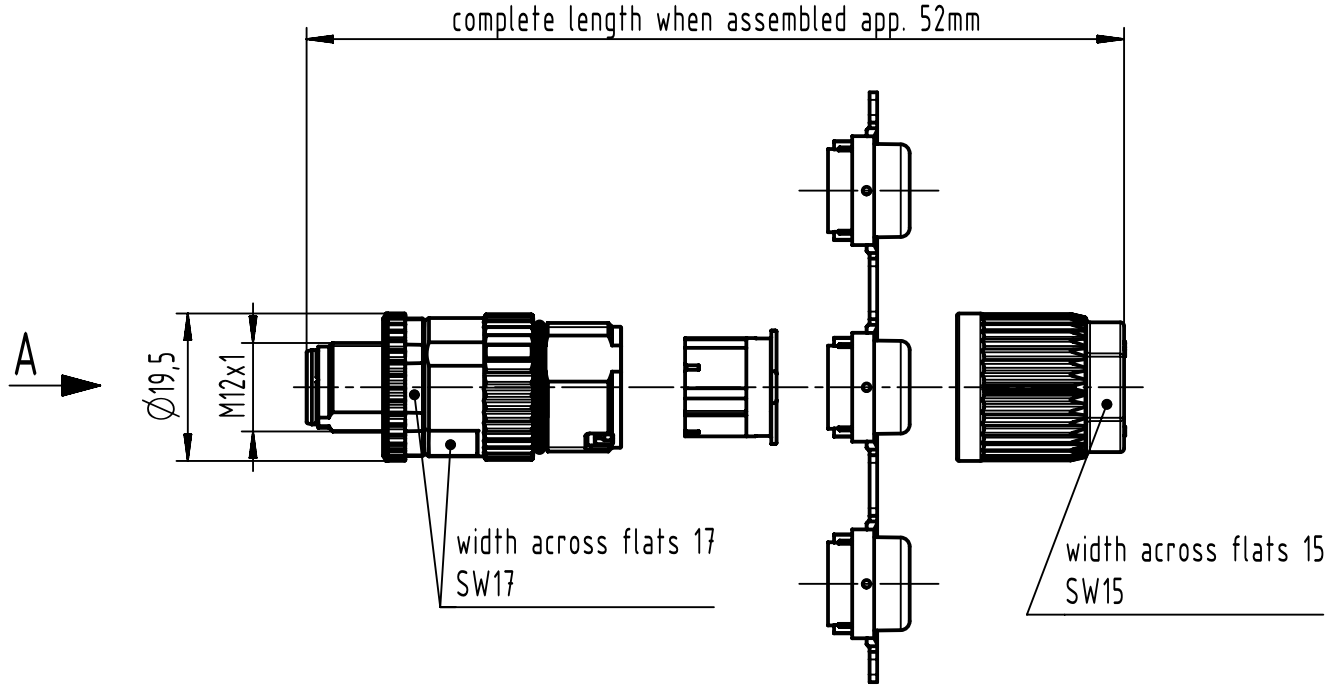

contact face based on
IEC 61076-2-101

A (2:1)

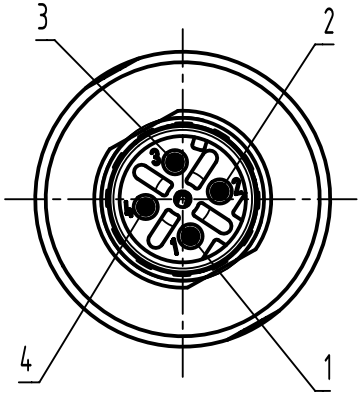

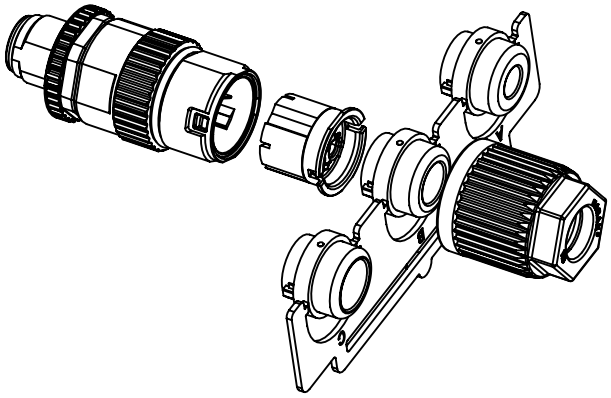

cable outside diameter	conductor cross section
4,5mm - 8,8mm	AWG22 - AWG18 0,34mm² - 0,75mm²

All Dimensions in mm
Original Size DIN A4

Scale 1:1

Free size tol.

Ref.

Sub.

All rights reserved

Department EL PD

HARTING
D-32339 Espelkamp

Created by	Inspected by	Standardisation	Date	State
HASSE	104122	SAP_WFRT	2022-02-04	Final Release

Title M12-L-CC-IDC-4P-DCOD-M-STR-SHLD

Doc-Key / ECM-Nr.
100196290/UGD/003/J
500000210890

Type TB

Number 21032821405

Rev. J

Page 1/1

A4