RoHS compliant
by exemption

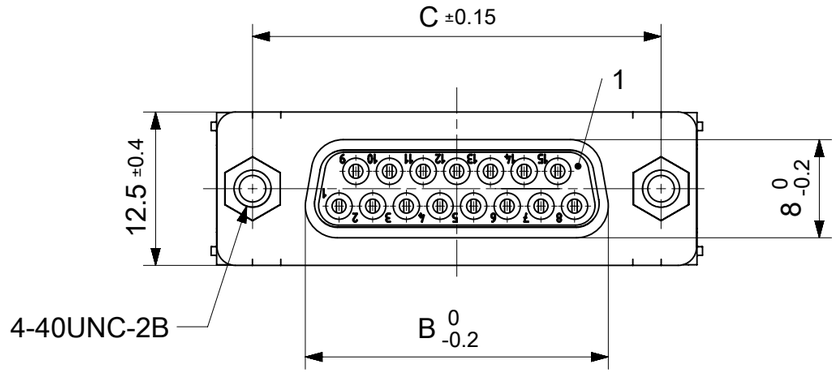

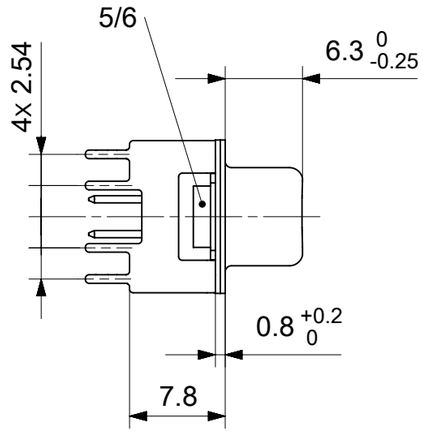

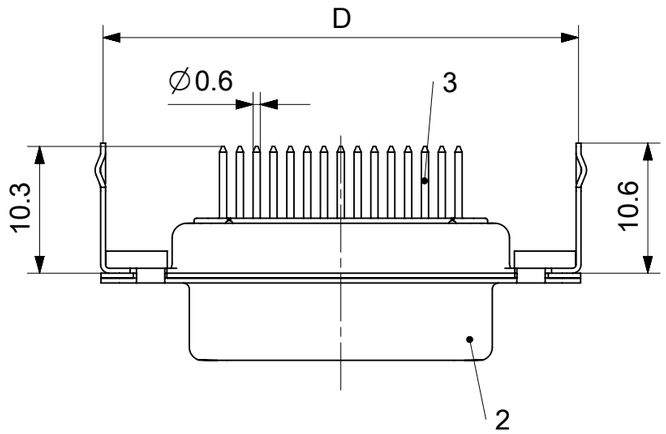

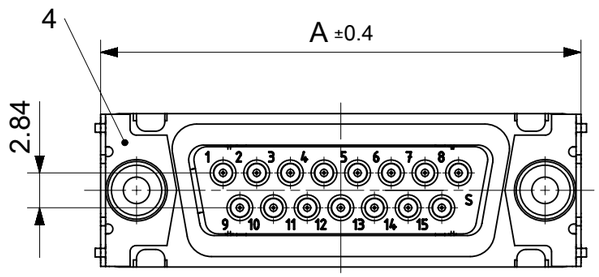

FCT Part number:

Fxx*1)S1G2-0503

e.g. F15S1G2-0503

*1) xx No. of contacts 09, 15, 25 or 37

*2) y for performance classes 1, 2 or 3
(contact cycle for G1/G2/G3 = 500/200/50)

Material Number	xx*1)	y*2)	A[mm]	B[mm]	C[mm]	D[mm]
1731091163	09	G2	30.8	16.4	25	30.46
1731091335	15	G2	39.1	24.7	33.3	38.76
1731091461	25	G2	53	38.5	47.04	52.5
-	37	-	69.3	54.9	63.5	68.96

*PCB hole patterns see document 2195600062

No.	Pc.	Part	Type Description/Material	Surface plating/ Color/Class
6	2	Rivet ring	Brass	tin plated
5	2	Clinch nut	MW 4-40 / Brass	tin plated
4	2	Latch lock	Steel	tin plated
3	xx	Signal contact	S1 / Brass	G2
2	1	Shell	Steel	tin plated
1	1	Insulator	PBT (-55°C to +125°C) acc. UL94V-0	white

MEASUREMENTS WITHOUT TOLERANCE ACC TO ISO 2768-m

REPLACEMENT FOR DOCUMENT NUMBER: FxxS1Gy-0503

THIS DRAWING CONTAINS INFORMATION THAT IS PROPRIETARY TO MOLEX ELECTRONIC TECHNOLOGIES, LLC AND SHOULD NOT BE USED WITHOUT WRITTEN PERMISSION

FUNCTIONAL SYMBOLS: F/A = 0, F/C = 0, F/P = 0

DIVISIONAL SYMBOLS

DIMENSION UNITS: mm — SCALE: 2:1

GENERAL TOLERANCES (UNLESS SPECIFIED)

ANGULAR TOL	± °
4 PLACES	±
3 PLACES	±
2 PLACES	±
1 PLACE	±
0 PLACES	±

DRAFT WHERE APPLICABLE MUST REMAIN WITHIN DIMENSIONS

CURRENT REV DESC:

EC NO: 707726
DRWN: SKANDB 2021/12/02
CHK'D: MTEUBEL 2022/05/25
APPR: MTEUBEL 2022/05/25

INITIAL REVISION:
DRWN: SKANDB 2021/12/02
APPR: MTEUBEL 2022/05/25

FIRST ANGLE PROJECTION | DRAWING: A3-SIZE | SERIES: 173109

molex

FCT D-SUB MINIATURE CONNECTOR

PRODUCT CUSTOMER DRAWING

DOCUMENT NUMBER	DOC TYPE	DOC PART	REVISION
1731091163	PSD	000	A

MATERIAL NUMBER	CUSTOMER	SHEET NUMBER
SEE TABLE	GENERAL MARKET	1 OF 1

DOCUMENT STATUS	P1	RELEASE DATE	2022/05/25 08:51:18

FORMAT: master-tb-prod-A3
REVISION: J1
DATE: 2021/05/01