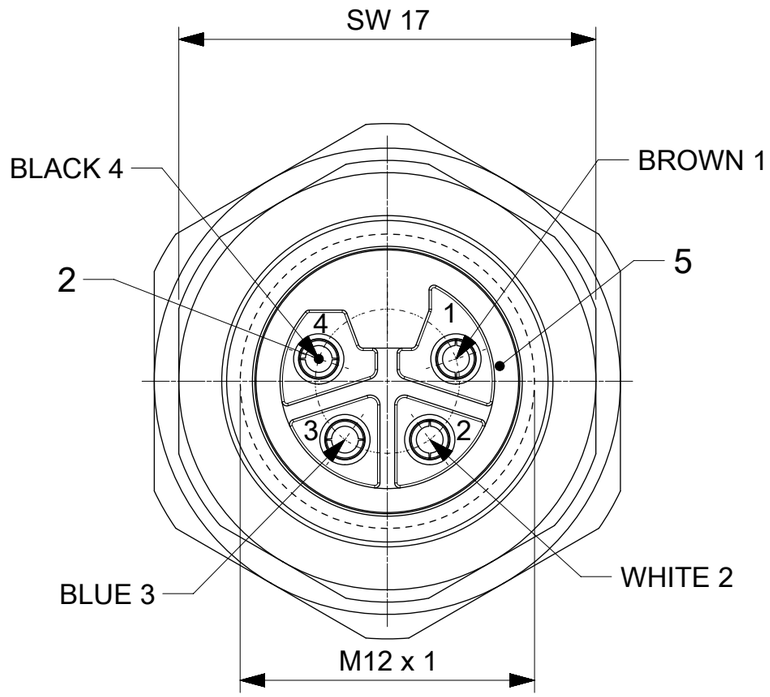

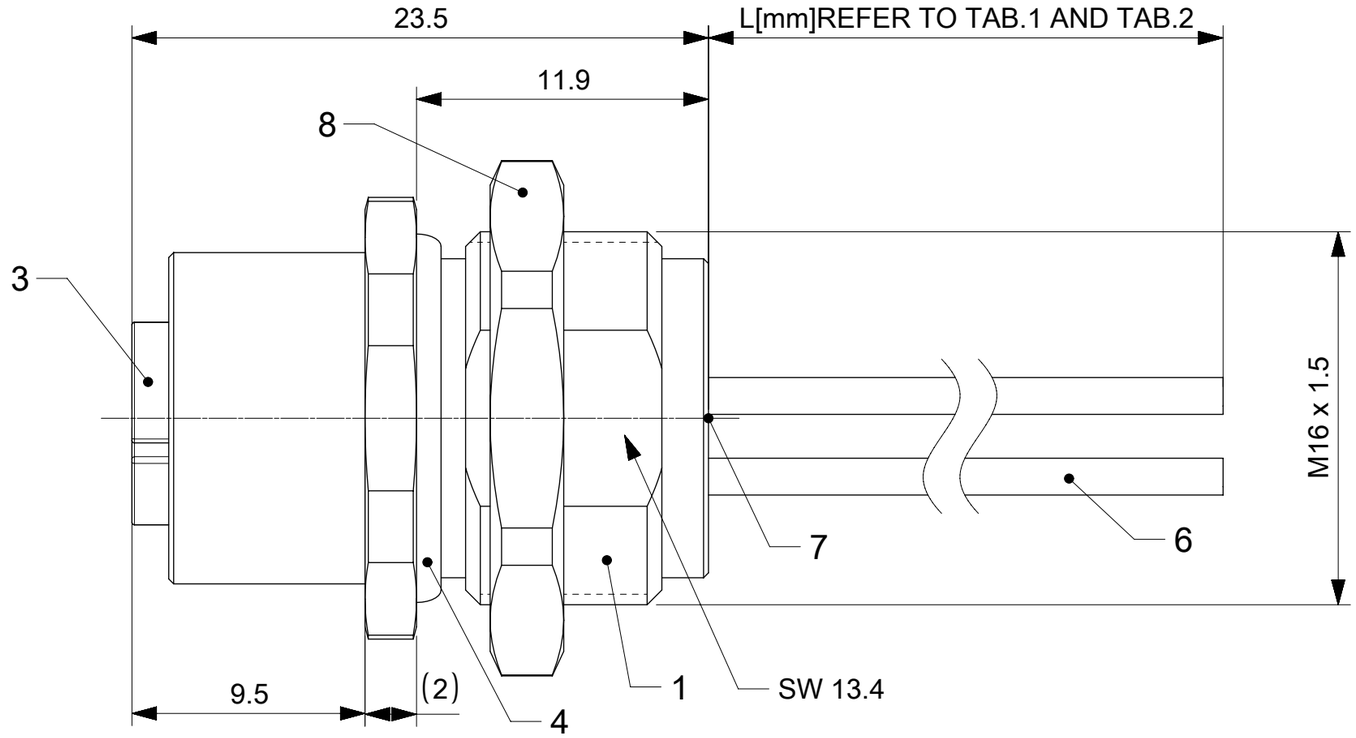

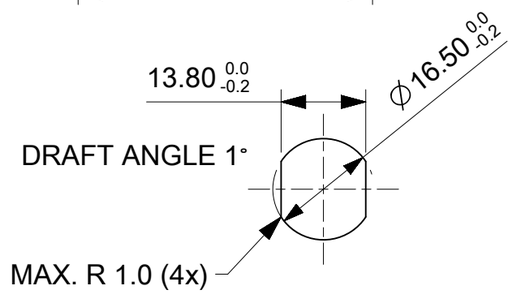

PANEL CUTOUT

TABLE 1: CABLE LENGTH					
NOMINAL SECTION 1,5mm²					
MATERIAL NO.	ENG. NO.	Description	L [mm]	TOL. [mm]	RATED CUR. [A]
1205020028	LRP4U24L15M005	REC M12 4P LC FE M16 FM 0.5M WIR 1.5	500	+40	12
1205020029	LRP4U24L15M002	REC M12 4P LC FE M16 FM 0.2M WIR 1.5	200	+40	12
1205020048	LRP4U24L15M010	REC M12 4P LC FE M16 FM 1.0M WIR 1.5	1000	+40	12
1205020049	LRP4U24L15M020	REC M12 4P LC FE M16 FM 2.0M WIR 1.5	2000	+60	12

TABLE 2: CABLE LENGTH					
NOMINAL SECTION 2,5mm²					
MATERIAL NO.	ENG. NO.	Description	L [mm]	TOL. [mm]	RATED CUR. [A]
1205020032	LRP4U24L25M005	REC M12 4P LC FE M16 FM 0.5M WIR 2.5	500	+40	16
1205020033	LRP4U24L25M002	REC M12 4P LC FE M16 FM 0.2M WIR 2.5	200	+40	16
1205020052	LRP4U24L25M010	REC M12 4P LC FE M16 FM 1.0M WIR 2.5	1000	+40	16
1205020053	LRP4U24L25M020	REC M12 4P LC FE M16 FM 2.0M WIR 2.5	2000	+60	16

TECHNICAL DATA:

CONTACT ∅:	1.5mm
RATED VOLTAGE:	63V AC/DC
RATED CURRENT:	SEE TAB.1 / TAB.2
OVERVOLTAGE CATEGORIE:	3
POLLUTION DEGREE:	3
DIELECTRIC STRENGTH:	1500V
CONTACT RESITANCE:	≤ 5mΩ
INSULATION RESISTANCE:	MIN: 10^8 Ω
IP RATING:	IP67 (connected condition)
TEMPERATURE RANGE:	-25°C bis +85°C

PACKAGING:
THE RECEPTACLE ARE PACKED IN PLASTIC BAGS
AND DELIVERED IN CARTON BOXES

TABLE 3: BOM			
POS	DESCRIPTION	MATERIAL	FINISH
1	SHELL M16FE	BRASS	Ni
2	CONTACT 15 FE	BRASS	Au
3	INSERT	PA	BLACK
4	O-RING	NBR	BLACK
5	O-RING	FPM	BLACK
6	WIRE 16AWG / 14AWG	PVC	-
7	POTTING MATERIAL	RESIN	NATURAL
8	HEX NUT	BRASS	Ni

FUNCTIONAL SYMBOLS: FA = 0, FC = 0, FP = 0
DIVISIONAL SYMBOLS

THIS DRAWING CONTAINS INFORMATION THAT IS PROPRIETARY TO MOLEX ELECTRONIC TECHNOLOGIES, LLC AND SHOULD NOT BE USED WITHOUT WRITTEN PERMISSION

DIMENSION UNITS: mm — SCALE: 4:1
GENERAL TOLERANCES (UNLESS SPECIFIED)

ANGULAR TOL	±	1.0 °
4 PLACES	±	
3 PLACES	±	
2 PLACES	±	0.05
1 PLACE	±	0.3
0 PLACES	±	0.5

DRAFT WHERE APPLICABLE MUST REMAIN WITHIN DIMENSIONS

CURRENT REV DESC:
EC NO: 735108
DRWN: NFRITZEN 2022/05/04
CHK'D: RSILLER 2023/01/17
APPR: RSILLER 2023/01/17
INITIAL REVISION:
DRWN: NFRITZEN 2021/07/08
APPR: RSILLER 2022/05/04

THIRD ANGLE PROJECTION | DRAWING: A3-SIZE | SERIES: 120502

molex

REC M12 4P LC FE M16 FM XM WIR

PRODUCT CUSTOMER DRAWING

DOCUMENT NUMBER	DOC TYPE	DOC PART	REVISION
1205020028	PSD	000	A1

MATERIAL NUMBER	CUSTOMER	SHEET NUMBER
SEE TABLE	GENERAL MARKET	1 OF 1

DOCUMENT STATUS	P1	RELEASE DATE	2023/01/17 10:52:49

FORMAT: mxtitle_no_logo_A3
REVISION: J
DATE: 2020/01/16