THIS COPY IS PROVIDED ON A RESTRICTED BASIS AND IS NOT TO BE USED IN ANY WAY DETRIMENTAL TO THE INTERESTS OF PANDUIT CORP.

NOTES:

1. SEE CURRENT CATALOG FOR ADDITIONAL PART SUFFIXES TO INDICATE COLOR AND/OR PACKAGE QUANTITY.
2. THE FIBER-DUCT 2x2 AND FIBERRUNNER 2x2 FOUR-WAY CROSS FITTING IS DESIGNED WITH A MINIMUM 2" (50.8) BEND RADIUS TO PROTECT FIBER OPTIC CABLE.
3. PARTS SUPPLIED:
   (1)- COVER
   (1)- BASE
4. DIMENSIONS IN PARENTHESES ARE IN METRIC.

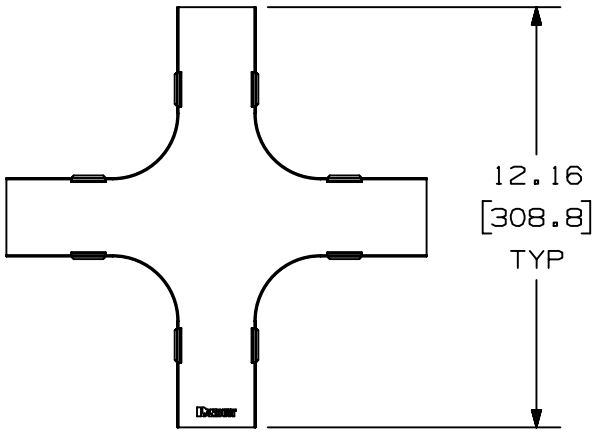

PANDUIT PART NUMBER	WEIGHT	MATERIAL
FFWC2X2**	0.61 LB/EACH (275g/EACH)	ABS
FFWC2X2L**	0.61 LB/EACH (275g/EACH)	PC/ABS

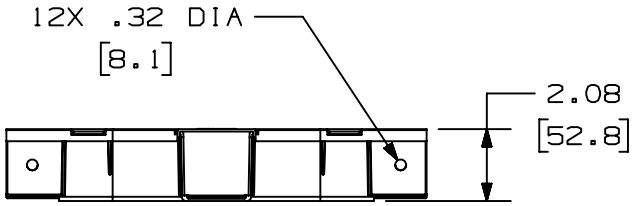

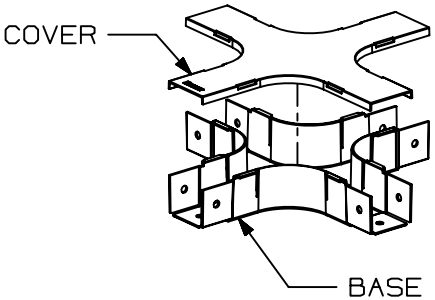

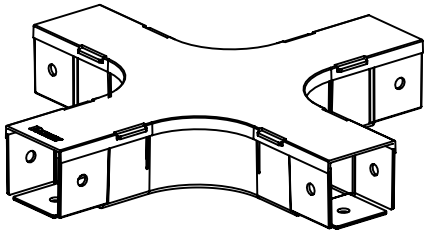

REV	DATE	BY	CHK	APR	DESCRIPTION	ECN
03B	8/28/20	MEX-JAGC	DWR	DWR	ADDED PART NUMBER UPDATED DRAWING BORDER & TITLE BLOCK	V09002DZ/11

TITLE
FIBER-DUCT 2x2 AND FIBERRUNNER 2x2 FOUR-WAY CROSS FITTING - (FFWC2X2**, FFWC2X2L**)
CUSTOMER DRAWING

ITEM REVISION NAME: D35245BV/03
DATASET FILE NAME: D35245BV_DC/03B

PANDUIT

MATERIAL: SEE PART NUMBER TABLE ABOVE

THIRD ANGLE PROJECTION

DRAWING NUMBER: 35245-22

DRAWN BY	DATE	CHK	SCALE	SHT 1 OF 1	SIZE
PM	1/21/97	CEF	NONE		A

NXGLOBAL_ASIZE