THIS COPY IS PROVIDED ON A RESTRICTED BASIS AND IS NOT TO BE USED IN ANY WAY DETRIMENTAL TO THE INTERESTS OF PANDUIT CORP.

1. VISIT OUR ON-LINE CATALOG AT WWW.PANDUIT.COM FOR A LIST OF CURRENT PARTS APPLICABLE FOR USE WITH THIS PRODUCT.
2. PARTS SUPPLIED:
   - 1- CHANNEL
   - 2- COUPLER
   - 2- COUPLER BACK PLATE
   - 1- BRACKET
   - 1- MOUNTING PLATE
   - 1- HARDWARE KIT (NOT SHOWN)
   - 1- INSTRUCTION SHEET (NOT SHOWN)
3. PRIMARY DIMENSIONS ARE IN MILLIMETERS.

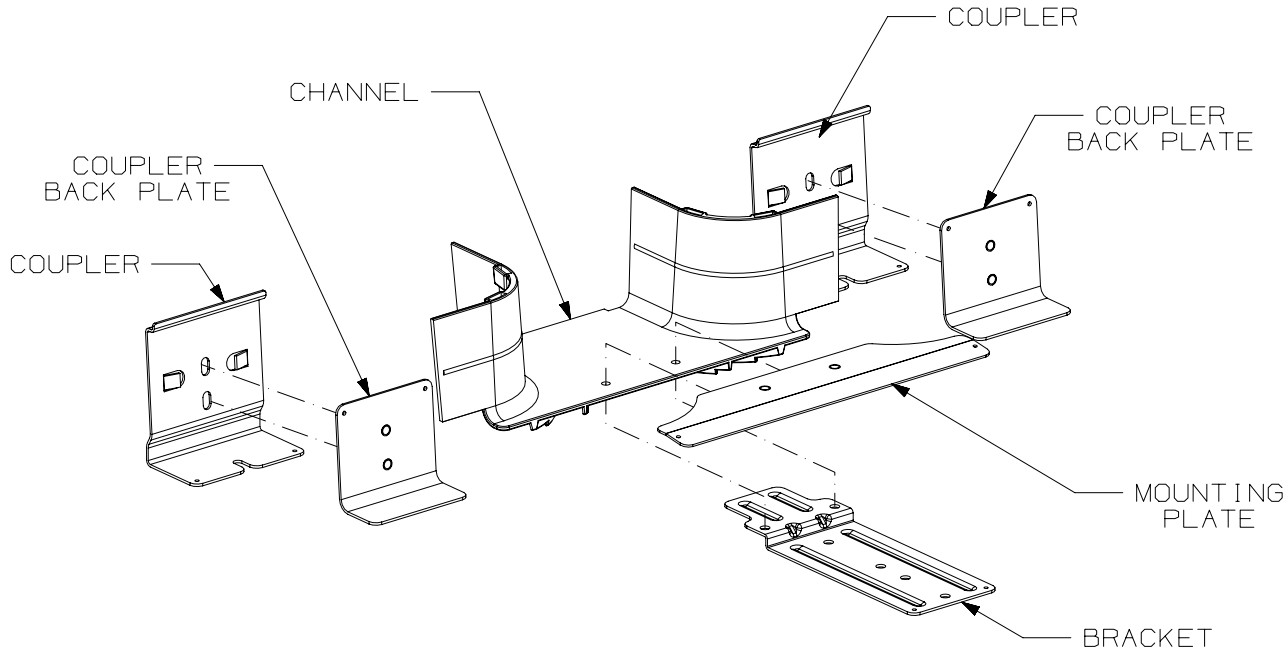

PANDUIT PART NO.	WEIGHT
FRCUTTSB6X4YL	3.11 LBS/EACH 1.41 Kg/EACH

REV	DATE	BY	CHK	APR	DESCRIPTION	ECN
00A	10/4/18	MEX-JAGC	RAMA	ELE	DRAWING RELEASE	V09001UC/00

TITLE

6x4 CUT IN TEE (FRCUTTSB6X4YL)

CUSTOMER DRAWING

ITEM REVISION NAME: 00929NQU/00

DATASET FILE NAME: 00929NQU_DC/00A

MATERIAL: N/A

THIRD ANGLE PROJECTION

DRAWING NUMBER: 00929NQU-DC

DRAWN BY	DATE	CHK	SCALE	SHT 1 OF 2	SIZE
MEX-JAGC	10/4/18	RAMA	N/A		A

NXGLOBAL_ASIZE

THIS COPY IS PROVIDED ON A RESTRICTED BASIS AND IS NOT TO BE USED IN ANY WAY DETRIMENTAL TO THE INTERESTS OF PANDUIT CORP.

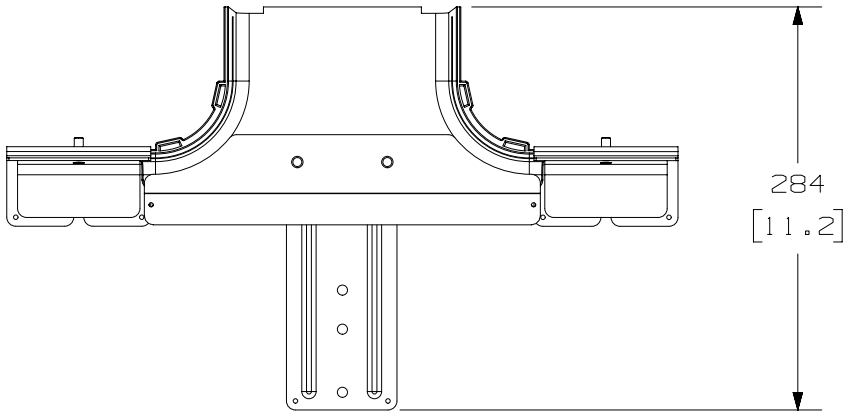

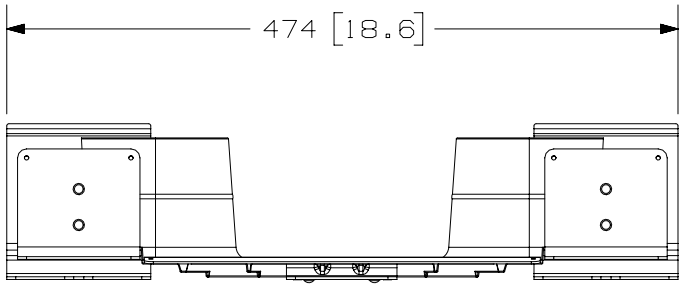

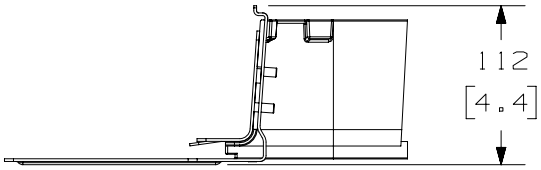

REV	DATE	BY	CHK	APR	DESCRIPTION	ECN
00A	10/4/18	MEX-JAGC	RAMA	ELE	DRAWING RELEASE	V09001UC/00

TITLE

6x4 CUT IN TEE (FRCUTTSB6X4YL)

CUSTOMER DRAWING

ITEM REVISION NAME: 00929NQU/00

DATASET FILE NAME: 00929NQU_DC/00A

PANDUIT

MATERIAL: N/A

THIRD ANGLE PROJECTION

DRAWING NUMBER: 00929NQU-DC

DRAWN BY	DATE	CHK	SCALE		SIZE
MEX-JAGC	10/4/18	RAMA	N/A	SHT 2 OF 2	A

NXGLOBAL_ASIZE