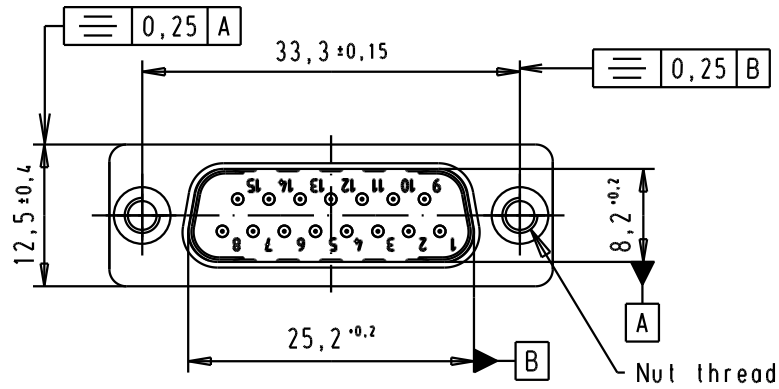


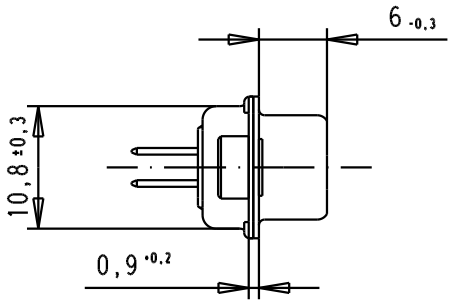


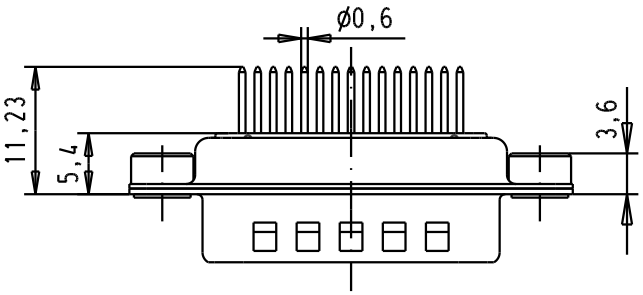


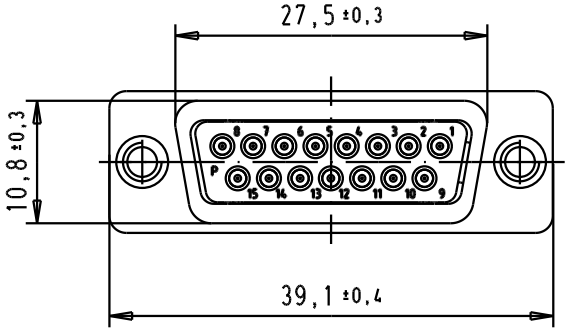


PCB Layout
Component side

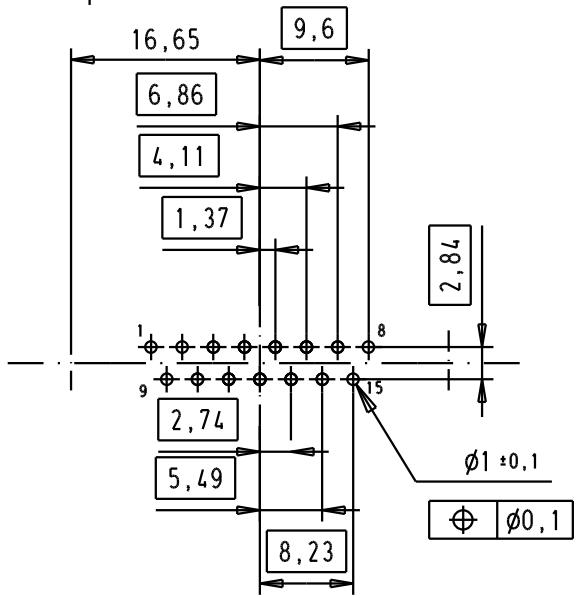


SPECIFICATION

| | |
|---|---|
| Mating Cycles | 500 |
| Filter type | C |
| Capacitance | 3900pf ±20% |
| Working Voltage | 100v |
| Current Rating | 7.5A |
| Insulation Resistance | >1GΩ |

| FREQUENCY (MHz) | ATTENUATION (dB) |
|---|---|
| 5 | 6dB |
| 10 | 11dB |
| 50 | 25dB |
| 100 | 35dB |
| 500 | 35dB |
| 1000 | 32dB |

| Part number | Nut thread | | Mod. | Dat. | Name |
|---|---|---|---|---|---|
| 09642227248 | M3 | | 33267 | 17/11/05 | JMDR |
| 09642227247 | UNC 4-40 | | 31058 | 8-JUL-02 | CV |

| | Dat. | Name |
|---|---|---|
| Detail. | 8-JUL-02 | CV |
| Insp. | | |
| Stand. | | |

All Dim. in mm
Orig. Size DIN A 4

D-Sub, male, straight, 15 Poles, turned solder pins, tin plated shell with dimples and clinch nuts

Ma?Mstab/ Scale 1.5:1

HARTING EURL
F-95972 Paris

TB 0964222724x

Sub.

Blatt/ Page 3/3