06020SA-24x (60□ x 20L)

General Specifications

Motor Protection:
Auto Restart/Polarity Protection

Insulation Resistance:
10M Ý or over with a DC500V Megger

Dielectric Withstand Voltage:
AC 700V 1s or AC 500V 1min

Allowable Ambient Temperature Range:
-10ÁC ~ +70ÁC (Operating)
-40ÁC ~ +70ÁC (Storage)
(non-condensing environment)

Expected Life

Failure Rate: 10%
60ÁC 40,000 Hours (AA/EA)

Material

Casing : Plastic (Black) UL94V-0
Impeller : Plastic (Black) UL94V-0
Bearing : Ball Bearing
Lead Wire : UL3385, AWG26, +Red, -Black

Panel Cut-Outs

Units: mm (inch)

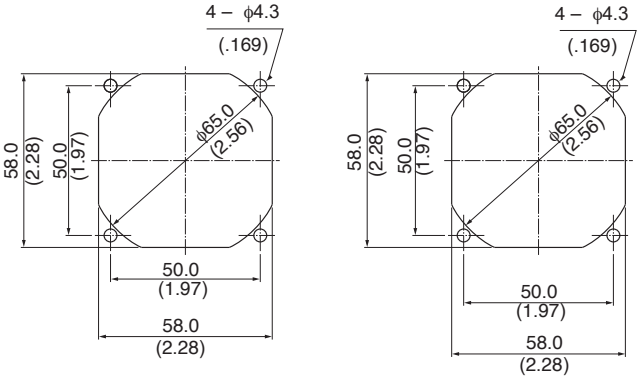

Characteristic Curves

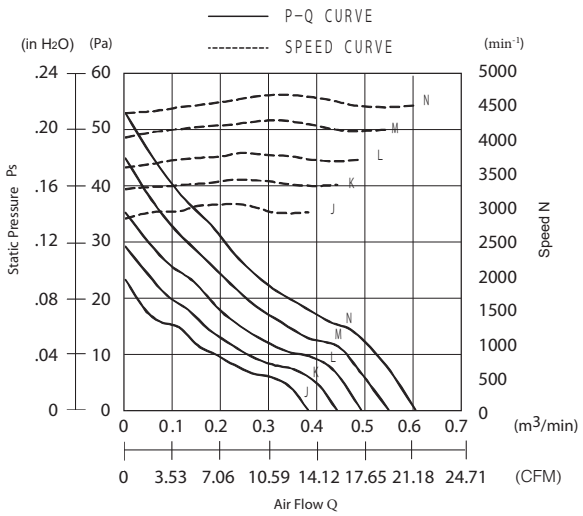

Outline

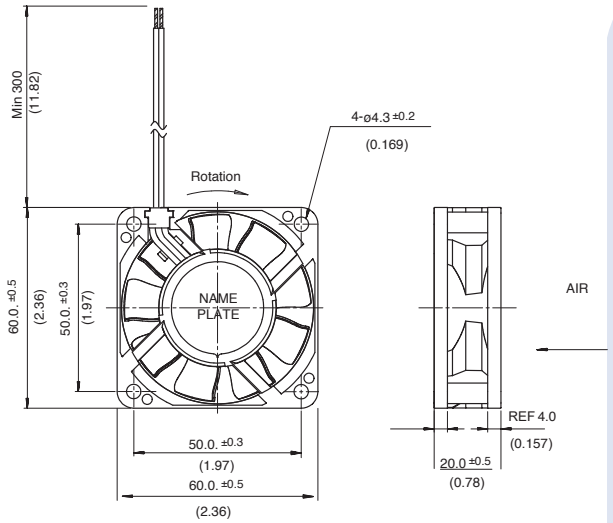

***Outline is (Rib) Type

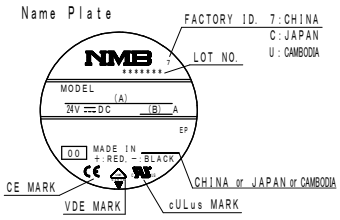

(A)	(B)
Model Name	Current
06020SA-24J-□A	0.05
06020SA-24K-□A	0.06
06020SA-24L-□A	0.07
06020SA-24M-□A	0.09
06020SA-24N-□A	0.10

□ – Casing Form - - - A : Rib Type, E : F lange Type

Specifications

Ï = Casing Form - - - A: Rib Type, E: Flange Type

MODEL	Rated Voltage	Operating Voltage	Current	Input Power	Speed	Max. Air Flow		Max. Static Pressure		Noise	Mass
	(V)	(V)	(A)*1	(W)*1	(min-1)*1	(CFM)	(m3/min)	(in H2O)	(Pa)	(dB)*1	(g)
06020SA-24J-Ï A-00	24	9.0 ~ 27.6	0.03	0.72	2800	12.71	0.36	0.09	21.2	21.5	56
06020SA-24K-Ï A-00	24	9.0 ~ 27.6	0.04	0.96	3200	14.48	0.41	0.11	27.6	23.5	56
06020SA-24L-Ï A-00	24	9.0 ~ 27.6	0.05	1.20	3600	16.60	0.47	0.14	34.4	26.0	56
06020SA-24M-Ï A-00	24	9.0 ~ 27.6	0.06	1.44	4000	18.36	0.52	0.16	40.0	28.5	56
06020SA-24N-Ï A-00	24	9.0 ~ 27.6	0.07	1.68	4400	20.48	0.58	0.20	49.1	30.5	56

*1: Average Values in Free Air

Note: PWM/Locked Rotor/Tach Available